Makerverse StemBoard v2.1
ESP32-C3 Dual DC Motor Driver Control Board

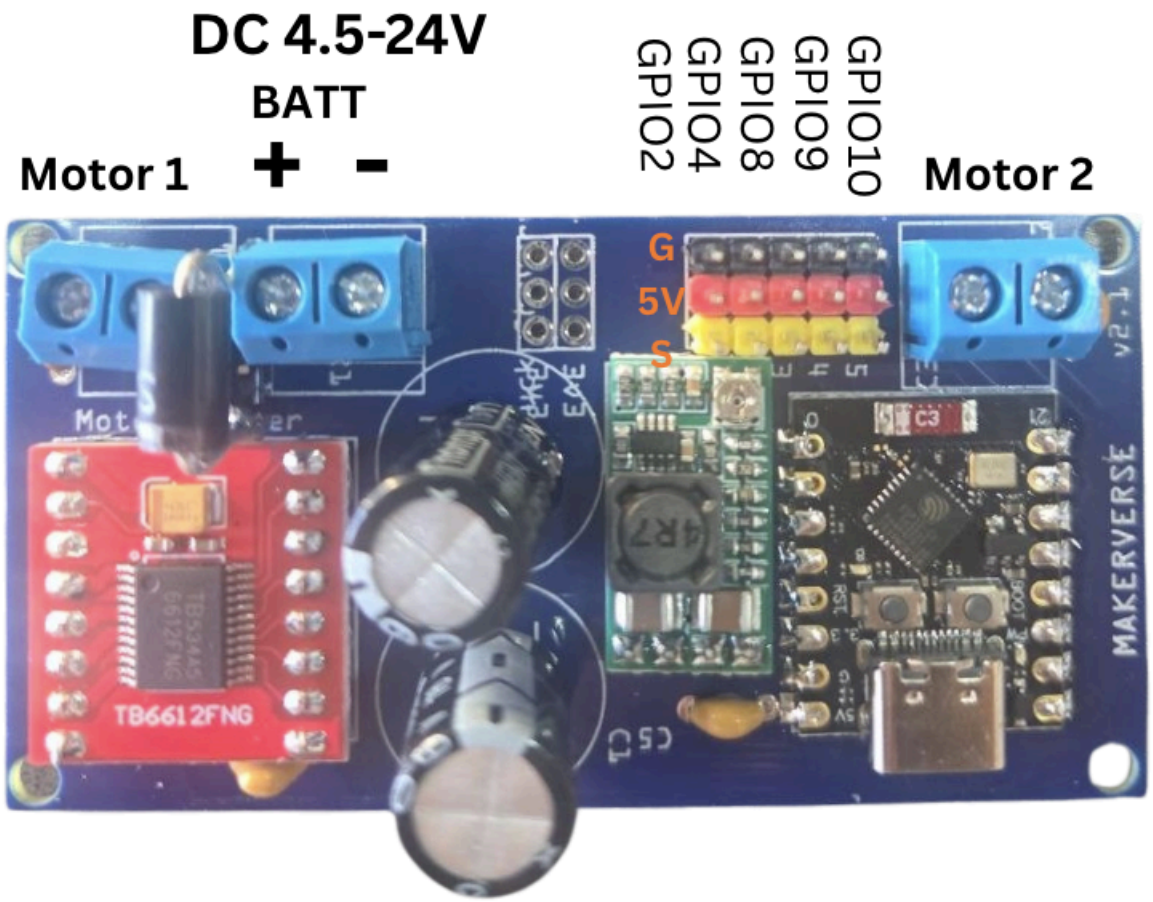

Overview:
A compact integrated control board combining an **ESP32-C3 SuperMini**, **TB6612FNG dual motor driver**, onboard **DC-DC buck converter**, and bulk filtering capacitors for driving two DC motors in robotics and embedded control applications.

Main Features

- **Microcontroller:** ESP32-C3 SuperMini
- **Motor Driver:** TB6612FNG dual H-bridge
- **Motor Channels:** 2 DC motors
- **Wireless Connectivity:** 2.4 GHz Wi-Fi and Bluetooth LE
- **Power Input Range: DC 4.5V to 24V**
- **Onboard Power Regulation:** Integrated buck converter for logic supply

- **Motor Outputs:** Screw terminals for **Motor 1** and **Motor 2**
- **Power Input Terminal:** Dedicated **BATT + / -** screw terminal
- **Bulk Filtering:** Large electrolytic capacitors for motor supply stabilization
- **Compact Form Factor:** Suitable for small robots and mobile platforms

GPIO / Control Header

Exposed GPIO pins for control and expansion:

- **GPIO2**
- **GPIO4**
- **GPIO8**
- **GPIO9**
- **GPIO10**

These GPIOs may be used for:

- motor control signals
- sensors
- communication peripherals
- general-purpose I/O expansion

Motor Driver Capabilities

- Controls **2 bidirectional brushed DC motors**
- Supports:
    - forward
    - reverse
    - brake
    - PWM speed control
- Efficient MOSFET-based driver with lower loss than L298N-type drivers

Typical Applications

- Two-wheel drive robots
- line-following robots
- sumo robots
- STEM and maker projects
- IoT robotic platforms
- compact mobile robotics controller boards

Power Notes

- Motor power is supplied through the **BATT** input
- Logic power for the ESP32-C3 is derived from the onboard regulator

- Designed for a **shared battery supply** for both controller and motors

Motor Driver to ESP32-C3 pin connections

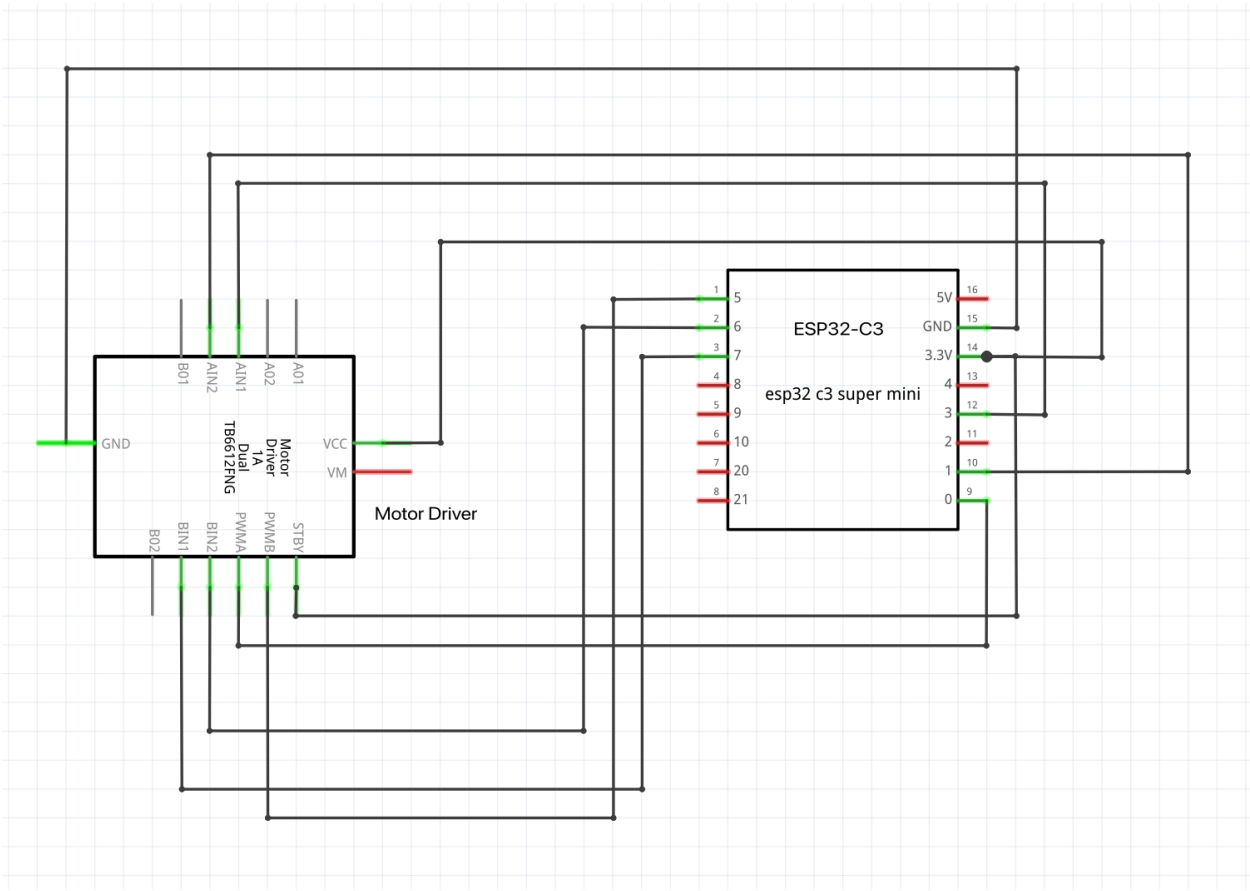

DATASHEETS and References

1. ESP32-C3 Super Mini

https://randomnerdtutorials.com/getting-started-esp32-c3-super-mini/

2. TB6612FNG Motor Driver

https://learn.sparkfun.com/tutorials/tb6612fng-hookup-guide/all

Sample sketch

https://github.com/makerverse-ph/basic-esp32-c3-mobile

Makerverse BLE Controller for ESP32-C3 Mobile Robot

https://makerverse.ph/mobile-bot-controller.html