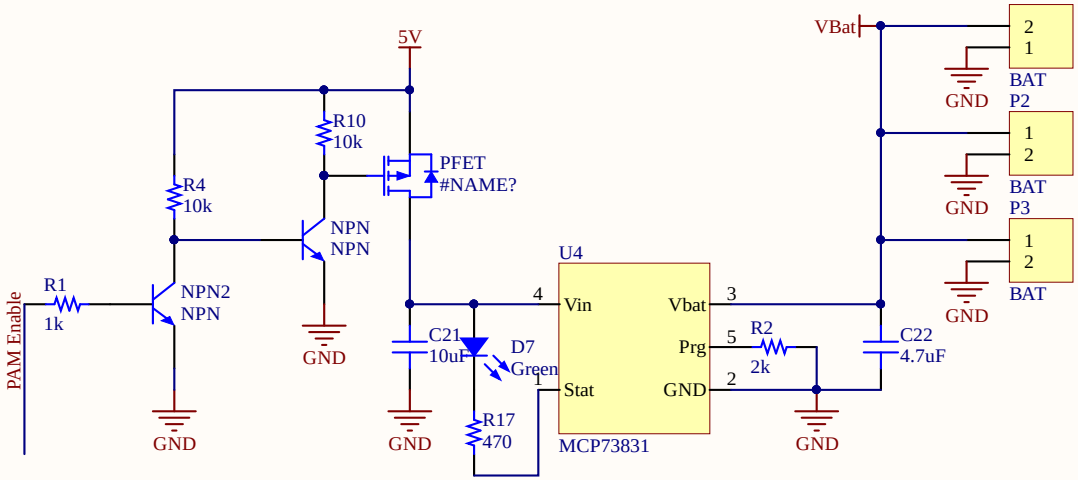

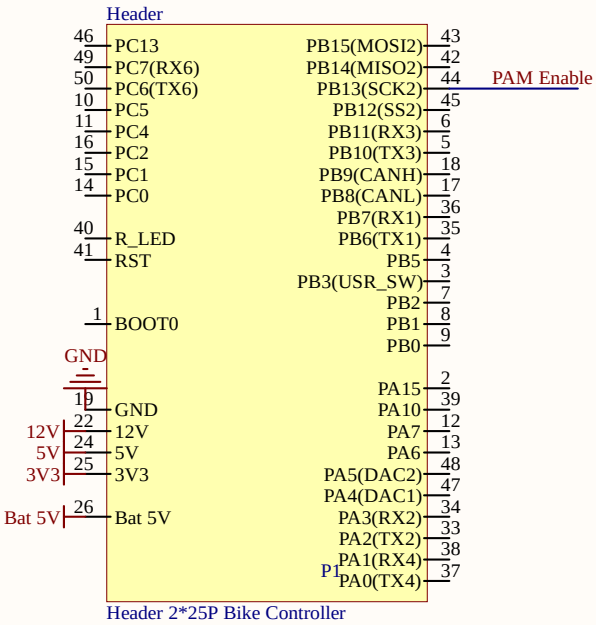

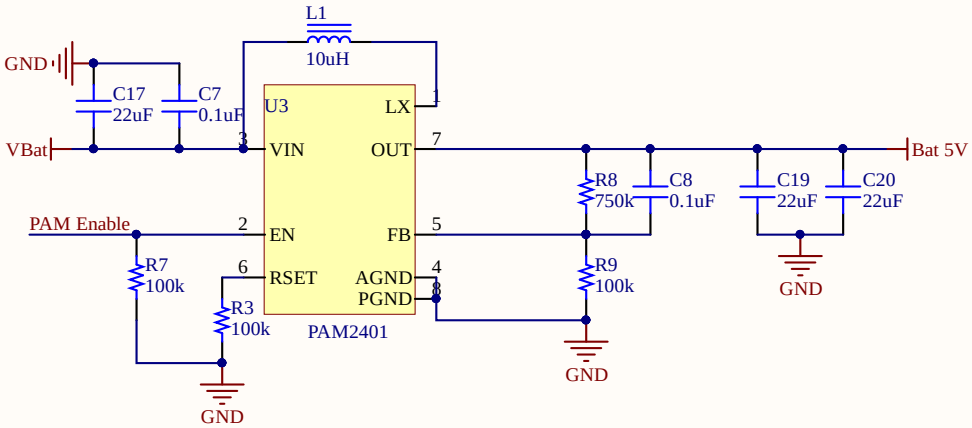

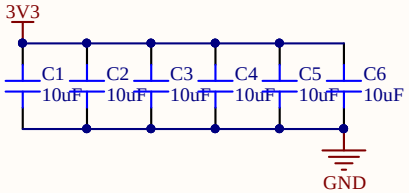

Title: Battery Backup v1.2		
Size: A	Number	Revision
Date: 3/22/2020	Sheet of	
File: D:\OneDrive\..\Battery Backup v1.2.SchDoc	Drawn By: Brian Barrett	