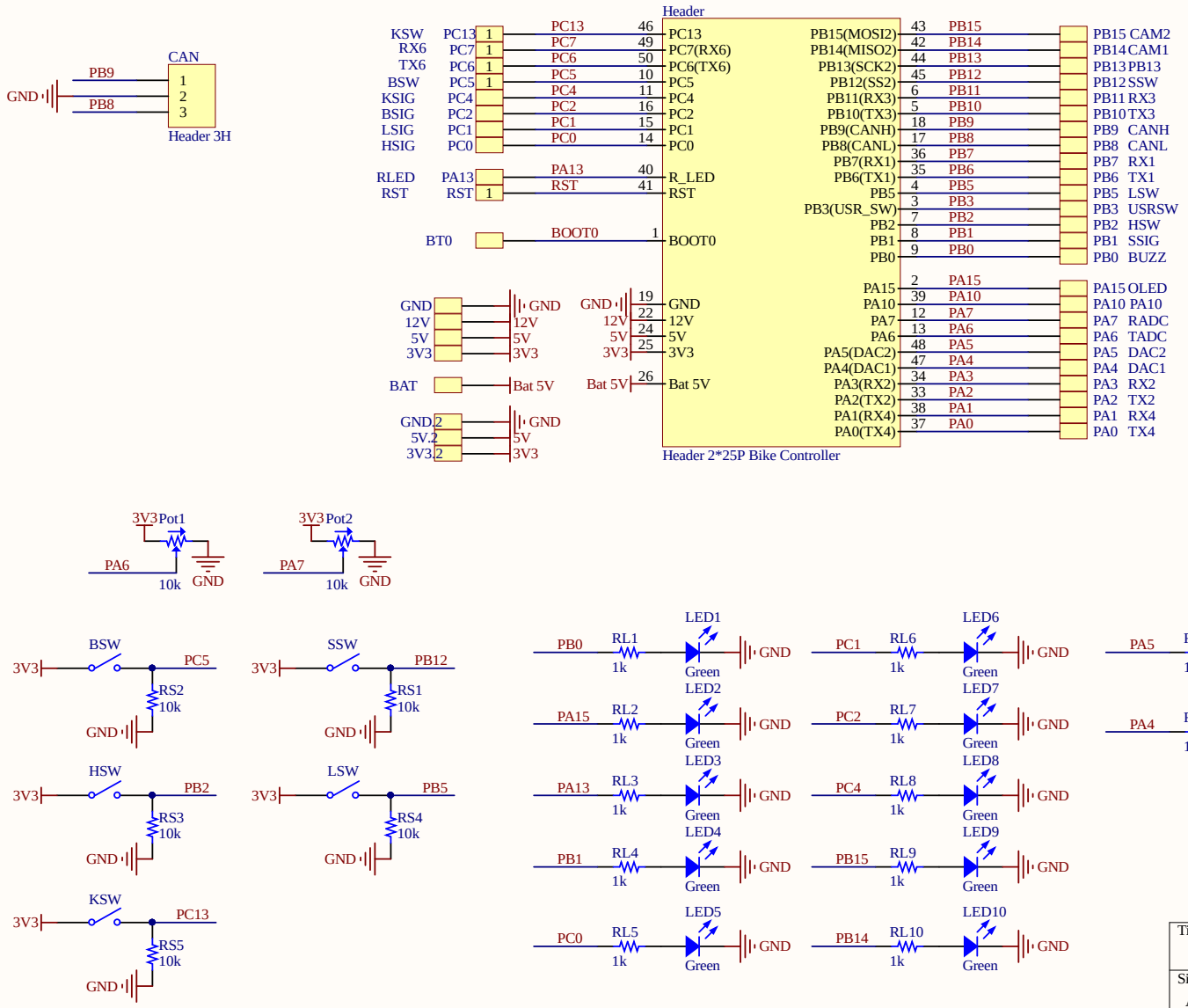

Title	Test Layer v1.2	
Size A4	Number	Revision
Date: 3/22/2020		Sheet of
File: D:\OneDrive\..\Test Layer v1.2.SchDoc		Drawn By: Brian Barrett