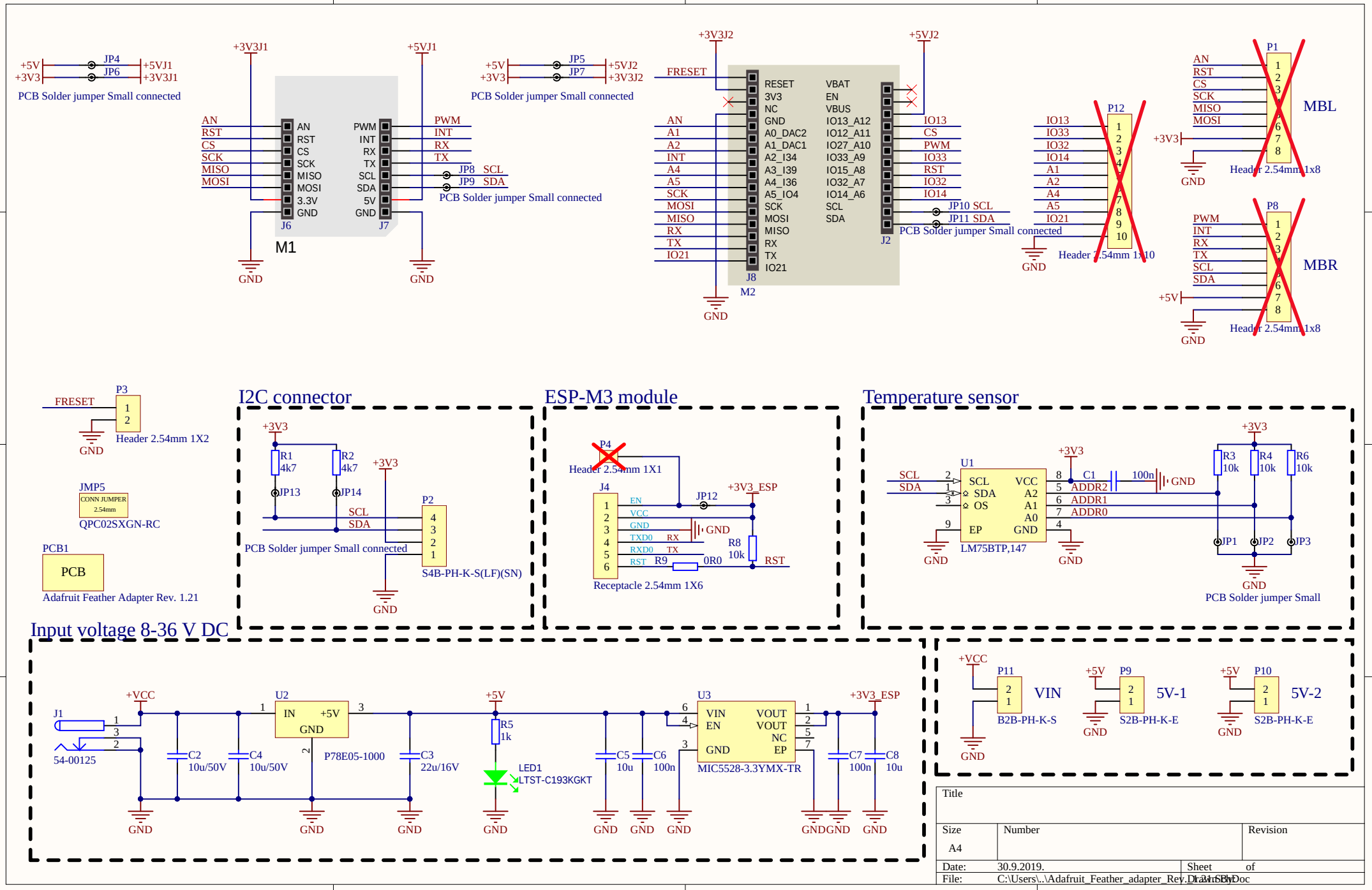
+5V
+3V3
JP4
JP6
+5VJ1
+3V3J1
PCB Solder jumper Small connected
+3V3J1
+5VJ1
AN
RST
CS
SCK
MISO
MOSI
AN
RST
CS
SCK
MISO
MOSI
3.3V
GND
J6
PWM
INT
RX
TX
SCL
SDA
5V
GND
J7
PWM
INT
RX
TX
JP8 SCL
JP9 SDA
PCB Solder jumper Small connected
M1
GND
GND
+5V
+3V3
JP5
JP7
+5VJ2
+3V3J2
PCB Solder jumper Small connected
+3V3J2
+5VJ2
FRESET
AN
A1
A2
INT
A4
A5
SCK
MOSI
MISO
RX
TX
IO21
RESET
3V3
NC
GND
A0_DAC2
A1_DAC1
A2_I34
A3_I39
A4_I36
A5_IO4
SCK
MOSI
MISO
RX
TX
IO21
J8
VBAT
EN
VBUS
IO13_A12
IO12_A11
IO27_A10
IO33_A9
IO15_A8
IO32_A7
IO14_A6
SCL
SDA
J2
IO13
CS
PWM
IO33
RST
IO32
IO14
JP10 SCL
JP11 SDA
PCB Solder jumper Small connected
M2
GND
IO13
IO33
IO32
IO14
A1
A2
A4
A5
IO21
P12
Header 2.54mm 1x10
GND
AN
RST
CS
SCK
MISO
MOSI
P1
MBL
+3V3
GND
Header 2.54mm 1x8
PWM
INT
RX
TX
SCL
SDA
P8
MBR
+5V
GND
Header 2.54mm 1x8
FRESET
P3
Header 2.54mm 1X2
GND
JMP5
CONN JUMPER 2.54mm
QPC02SXGN-RC
PCB1
PCB
Adafruit Feather Adapter Rev. 1.21
I2C connector
+3V3
R1 4k7
R2 4k7
JP13
JP14
+3V3
SCL
SDA
P2
PCB Solder jumper Small connected
S4B-PH-K-S(LF)(SN)
GND
ESP-M3 module
P4
Header 2.54mm 1X1
J4
EN
VCC
GND
TXD0 RX
RXD0 TX
RST
R9 0R0
JP12
+3V3_ESP
GND
R8 10k
RST
Receptacle 2.54mm 1X6
Temperature sensor
+3V3
U1
SCL
SDA
SCL
SDA
OS
EP
VCC
A2
A1
A0
GND
C1 100n
ADDR2
ADDR1
ADDR0
GND
LM75BTP,147
GND
GND
+3V3
R3 10k
R4 10k
R6 10k
JP1
JP2
JP3
GND
PCB Solder jumper Small
Input voltage 8-36 V DC
+VCC
J1
54-00125
C2 10u/50V
C4 10u/50V
U2
IN
+5V
GND
P78E05-1000
C3 22u/16V
+5V
R5 1k
LED1
LTST-C193KGKT
C5 10u
C6 100n
U3
VIN
EN
GND
VOUT
VOUT
NC
EP
MIC5528-3.3YMX-TR
+3V3_ESP
C7 100n
C8 10u
GND
+VCC
P11
VIN
B2B-PH-K-S
GND
+5V
P9
5V-1
S2B-PH-K-E
GND
+5V
P10
5V-2
S2B-PH-K-E
GND
Title
Size
A4
Number
Revision
Date: 30.9.2019.
Sheet of
File: C:\Users\...\Adafruit_Feather_adapter_Rev.21.SchDoc
Drawn By: