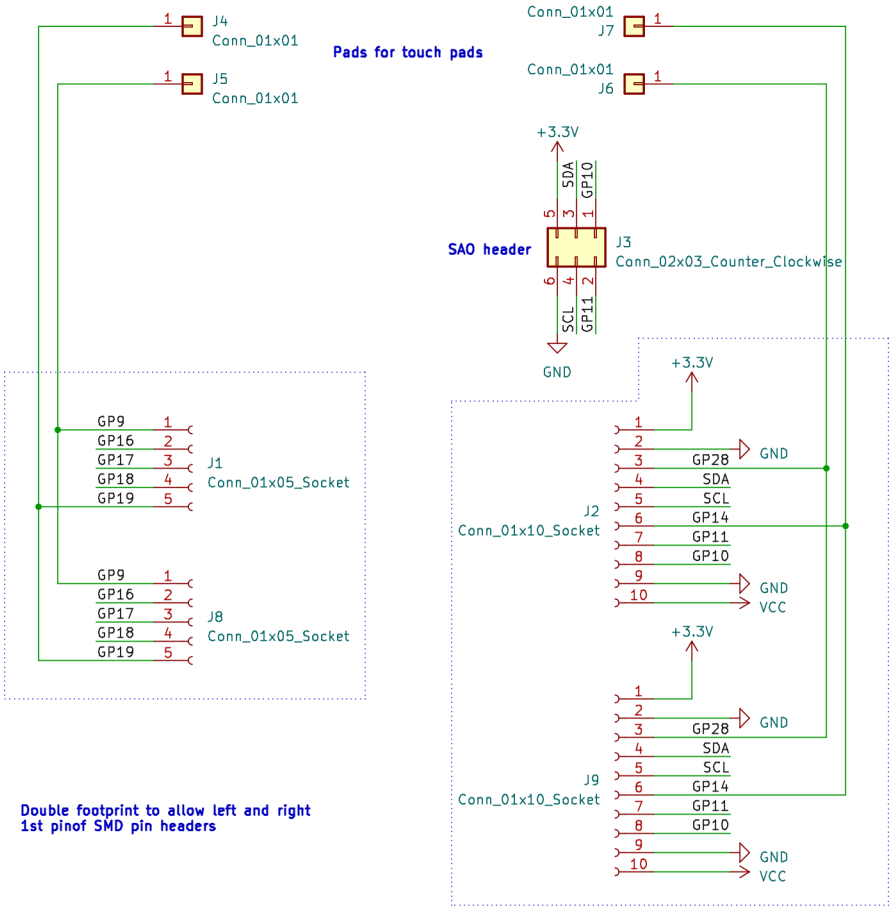

Double footprint to allow left and right
1st pinof SMD pin headers

SAO header specs:
https://hackaday.com/2019/03/20/introducing-the-shitty-add-on-v1-69bis-standard/

Sheet: /
File: cover.kicad_sch

Title: MakeZurich 2023 name tag cover

Size: A4	Date: 2023-06-03	Rev: 1
KiCad E.D.A. kicad 7.0.5-7.0.5~ubuntu22.04.1		Id: 1/1