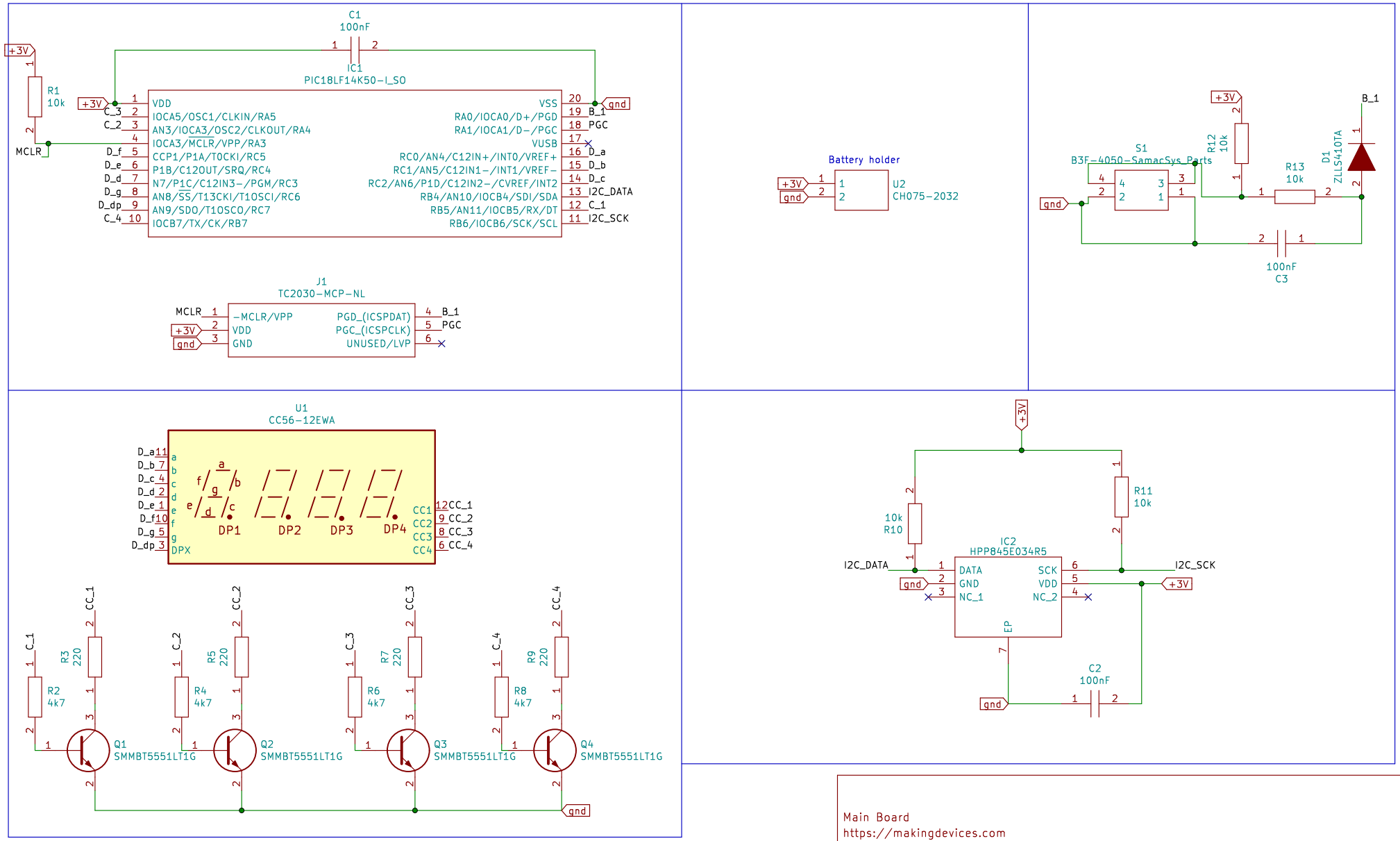

Main Board
https://makingdevices.com
Making Devices

Sheet:
File: RHT device.kicad_sch

Title: RHT Device

Size: A4	Date: 2023-04-20	**Rev: v1.0**
KiCad E.D.A. kicad 7.0.1		Id: 1/1