RevNo	Revision note	Date	Signature	Checked

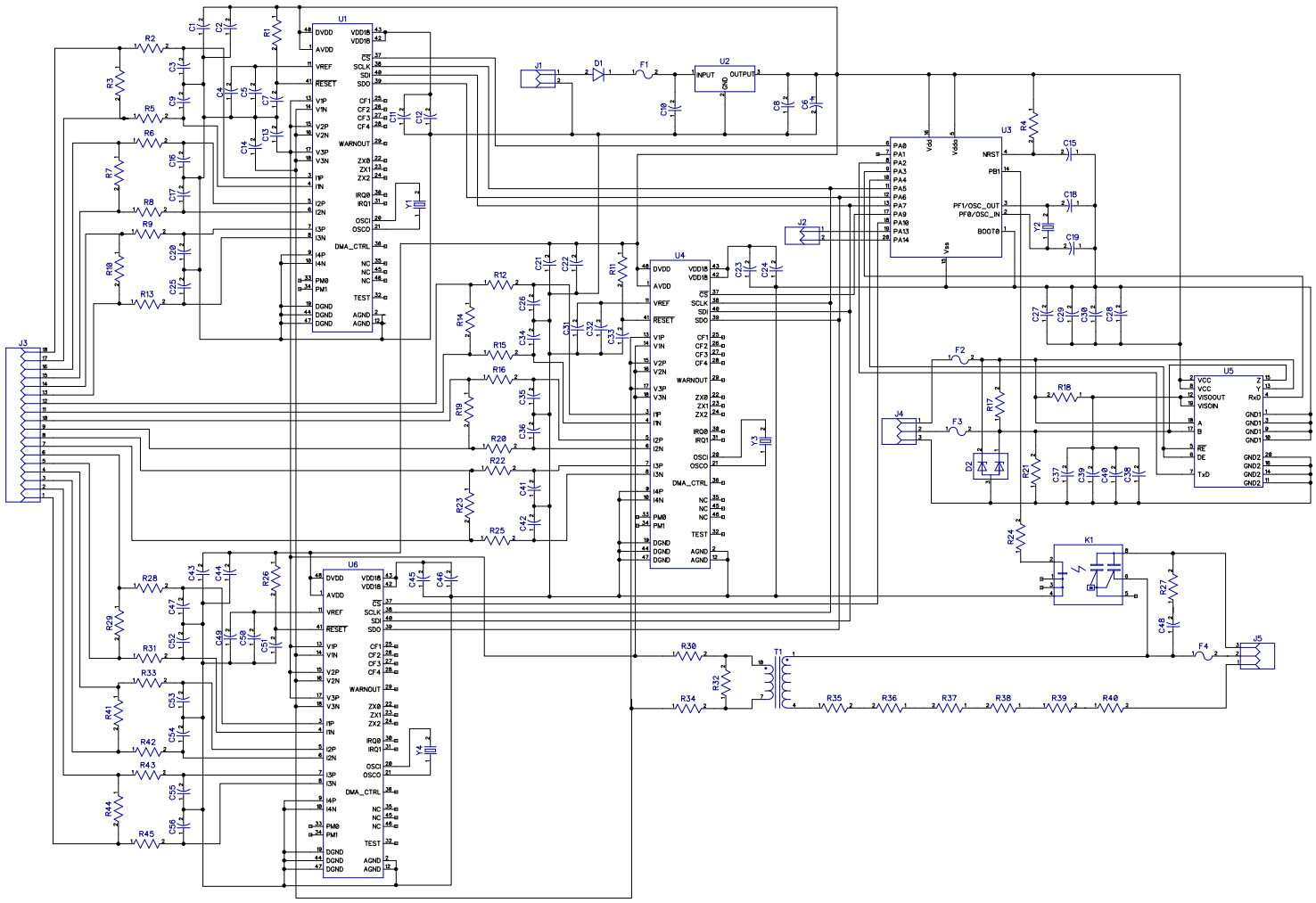

RefDes	Value
C1	100n
C2	100n
C3	18n
C4	100n
C5	10u
C6	220uf / 6.3V
C7	100n
C8	100n
C9	18n
C10	100n
C11	100n
C12	10u
C13	18n
C14	18n
C15	100n
C16	18n
C17	18n
C18	22
C19	22
C20	18n
C21	100n
C22	100n
C23	100n
C24	10u
C25	18n
C26	18n
C27	18n
C28	10u
C29	100n
C30	100n
C31	100n
C32	10u
C33	100n
C34	18n
C35	18n
C36	18n
C37	18n
C38	10u
C39	100n
C40	100n
C41	18n
C42	18n
C43	100n
C44	100n
C45	100n
C46	10u
C47	18n
C48	18n 630V
C49	100n
C50	10u
C51	100n
C52	18n
C53	18n
C54	18n
C55	18n
C56	18n
D1	SS54
D2	SM712
F1	1812 0.5A
F2	1812 0.1A
F3	1812 0.1A
F4	1812 0.5A
J1	Power
J2	Fw Update
J3	CT input
J4	RS485
J5	220V / Contactor
K1	AQH3213A
R1	10k
R2	1k
R3	22
R4	10k
R5	1k
R6	1k
R7	22
R8	1k
R9	1k
R10	22
R11	10k
R12	1k
R13	1k
R14	22
R15	1k
R16	1k
R17	120
R18	18k
R19	22
R20	1k
R21	18k
R22	1k
R23	22
R24	150
R25	1k
R26	10k
R27	39
R28	1k
R29	22
R30	1k
R31	1k
R32	100
R33	1k
R34	1k
R35	820k
R36	200k
R37	200k
R38	200k
R39	200k
R40	18k
R41	22
R42	1k
R43	1k
R44	22
R45	1k
T1	ZMPT101B
U1	ATM90E36A
U2	Mini 360 3.3V
U3	STM32F070F4P6
U4	ATM90E36A
U5	ADM2582EBRWZ
U6	ATM90E36A
Y1	18.384MHz
Y2	8MHz
Y3	18.384MHz
Y4	18.384MHz

Itemref	Quantity	Title/Name, designation, material, dimension etc		Article No./Reference	
Designed by		Checked by	Approved by - date - 00/00/00	File name	Date 00/00/00	Scale 1:1
					Edition 0	Sheet 1/1