RevNo	Revision note	Date	Signature	Checked

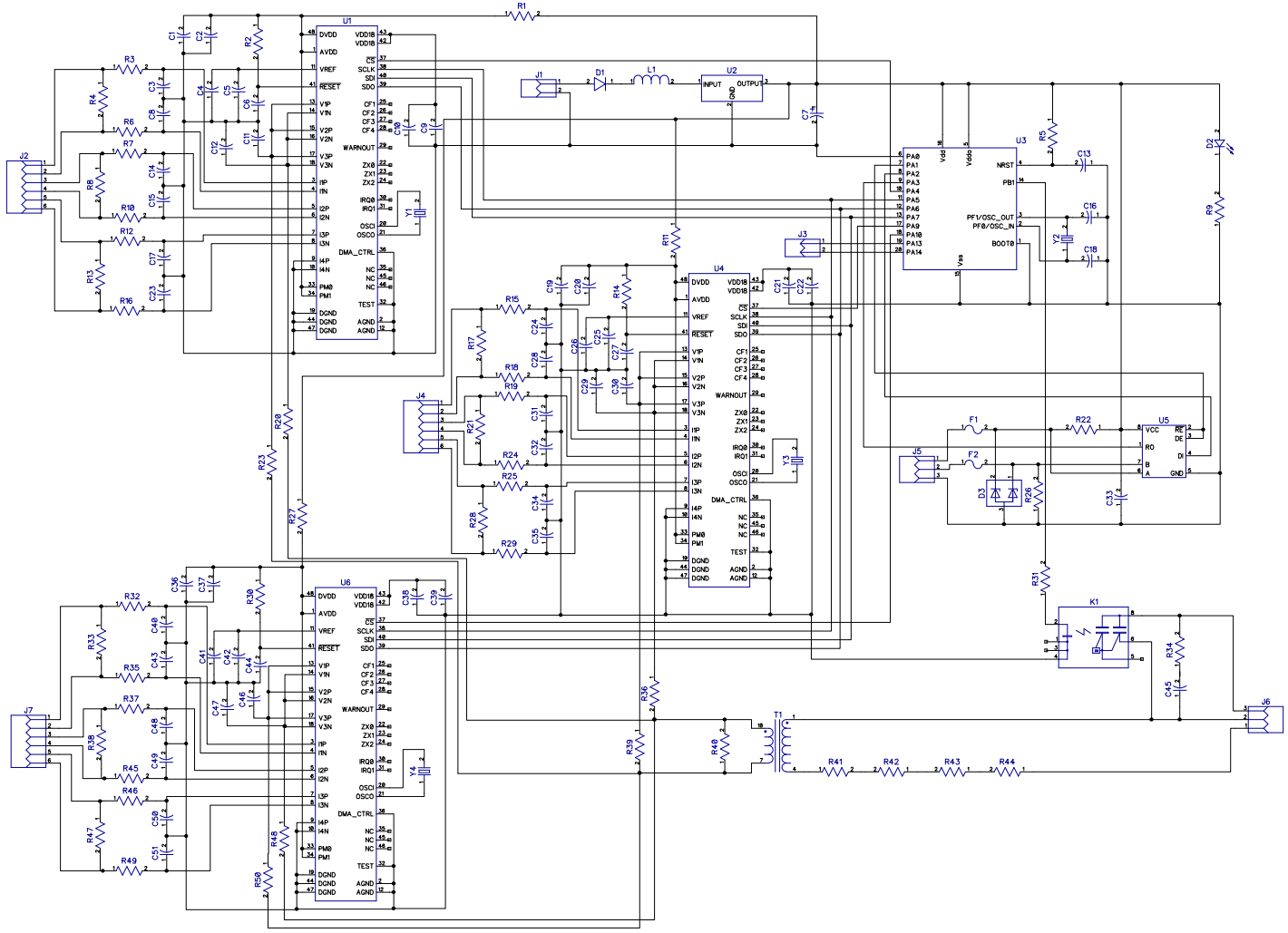

RefDes	Value
C1	100n
C2	100n
C3	18n
C4	100n
C5	10u
C6	100n
C7	220uf / 6.3V
C8	18n
C9	10u
C10	100n
C11	18n
C12	18n
C13	100n
C14	18n
C15	18n
C16	22
C17	18n
C18	22
C19	100n
C20	100n
C21	100n
C22	10u
C23	18n
C24	18n
C25	10u
C26	100n
C27	100n
C28	18n
C29	18n
C30	18n
C31	18n
C32	18n
C33	100n
C34	18n
C35	18n
C36	100n
C37	100n
C38	100n
C39	10u
C40	18n
C41	100n
C42	10u
C43	18n
C44	100n
C45	10n 630V
C46	18n
C47	18n
C48	18n
C49	18n
C50	18n
C51	18n
D1	SS110
D2	Power
D3	SM712
F1	1812 0.1A
F2	1812 0.1A
J1	Power
J2	CT1, CT2, CT3
J3	Fw Update
J4	C14, C15, C16
J5	RS485
J6	220V / Contactor
J7	C17, C18, C19
K1	AQH3213A
L1	68uH
R1	100
R2	10k
R3	1k
R4	22
R5	10k
R6	1k
R7	1k
R8	22
R9	1k
R10	1k
R11	100
R12	1k
R13	22
R14	10k
R15	1k
R16	1k
R17	22
R18	1k
R19	1k
R20	1k
R21	22
R22	18k
R23	1k
R24	1k
R25	1k
R26	18k
R27	100
R28	22
R29	1k
R30	10k
R31	150
R32	1k
R33	22
R34	39
R35	1k
R36	1k
R37	1k
R38	22
R39	1k
R40	470
R41	4.3k
R42	4.3k
R43	4.3k
R44	4.3k
R45	1k
R46	1k
R47	22
R48	1k
R49	1k
R50	1k
T1	ZMPT107B
U1	ATM90E36A
U2	Mini 360 3.3V
U3	STM32F070F4P6
U4	ATM90E36A
U5	ADM3485
U6	ATM90E36A
Y1	18.384MHz
Y2	8MHz
Y3	18.384MHz
Y4	18.384MHz

Itemref	Quantity	Title/Name, designation, material, dimension etc		Article No./Reference	
Designed by		Checked by	Approved by - date - 00/00/00	File name	Date 00/00/00	Scale 1:1
					Edition 0	Sheet 1/1