RevNo	Revision note	Date	Signature	Checked

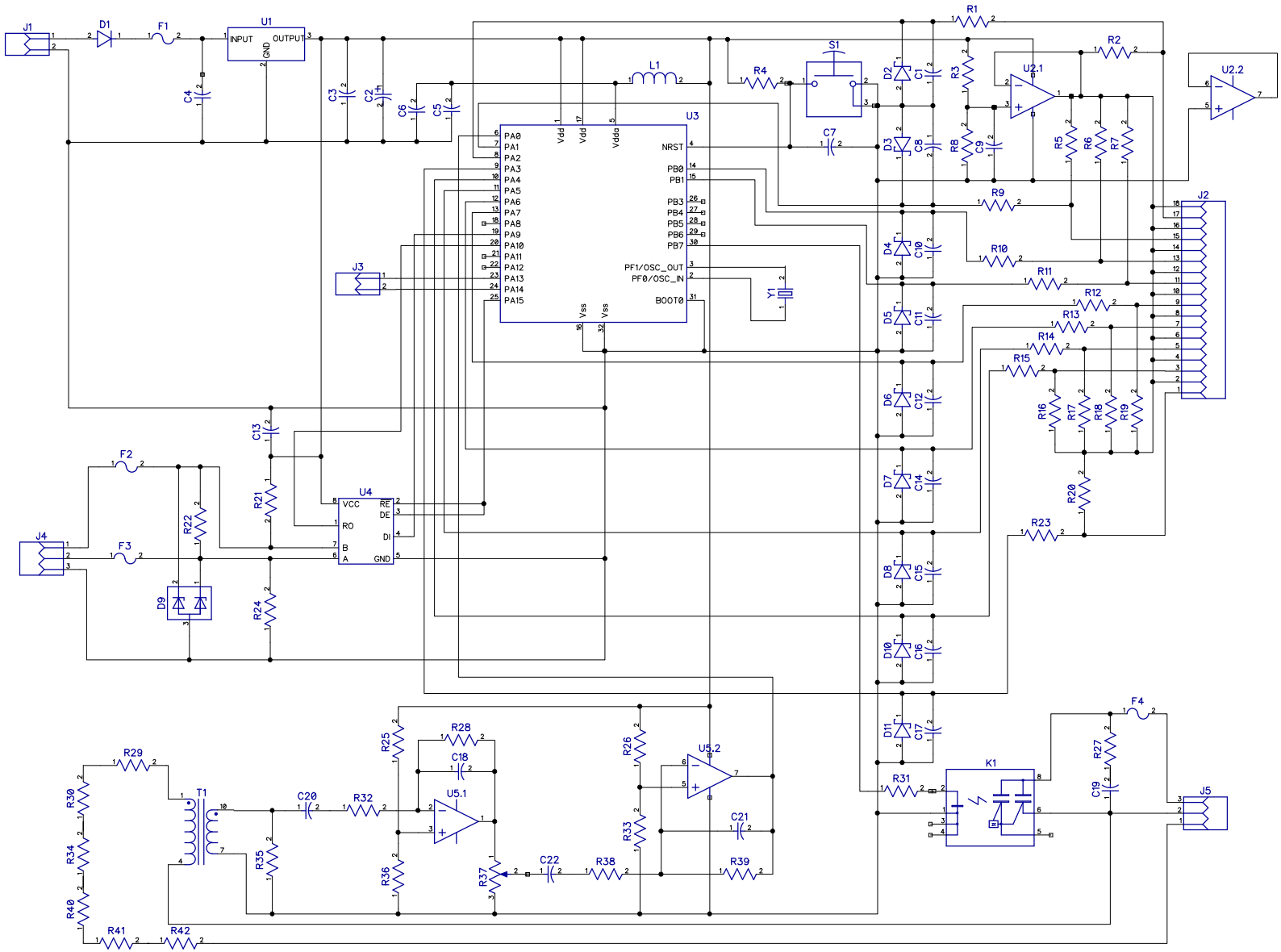

RefDes	Value
C1	100n
C2	220uf / 6.3V
C3	100n
C4	100n
C5	1uF
C6	10n
C7	100n
C8	100n
C9	1uF
C10	100n
C11	100n
C12	100n
C13	100n
C14	100n
C15	100n
C16	100n
C17	100n
C18	1n
C19	10n 630V
C20	10u
C21	1n
C22	10u
D1	SS54
D2	ESD523.3T1G
D3	ESD523.3T1G
D4	ESD523.3T1G
D5	ESD523.3T1G
D6	ESD523.3T1G
D7	ESD523.3T1G
D8	ESD523.3T1G
D9	SM712
D10	ESD523.3T1G
D11	ESD523.3T1G
F1	1812 0.5A
F2	1812 0.1A
F3	1812 0.1A
F4	1812 0.5A
J1	Power
J2	CT
J3	Fw Update
J4	RS485
J5	220V / Contactor
K1	AQH3213A
L1	10uH
R1	1k
R2	22
R3	18k
R4	10k
R5	22
R6	22
R7	22
R8	18k
R9	1k
R10	1k
R11	1k
R12	1k
R13	1k
R14	1k
R15	1k
R16	22
R17	22
R18	22
R19	22
R20	22
R21	18k
R22	120
R23	1k
R24	18k
R25	10k
R26	10k
R27	39
R28	100k
R29	820k
R30	200k
R31	100
R32	10k
R33	10k
R34	200k
R35	100
R36	10k
R37	20k
R38	10k
R39	100k
R40	200k
R41	200k
R42	18k
S1	Reset
T1	ZMPT101B
U1	Mini 360
U2	LM358P
U3	STM32F030K6T6
U4	ADM3485EARZ
U5	LM358P
Y1	8MHz

Itemref	Quantity	Title/Name, designation, material, dimension etc		Article No./Reference	
Designed by		Checked by	Approved by - date - 00/00/00	File name	Date 00/00/00	Scale 1:1
					Edition 0	Sheet 1/1