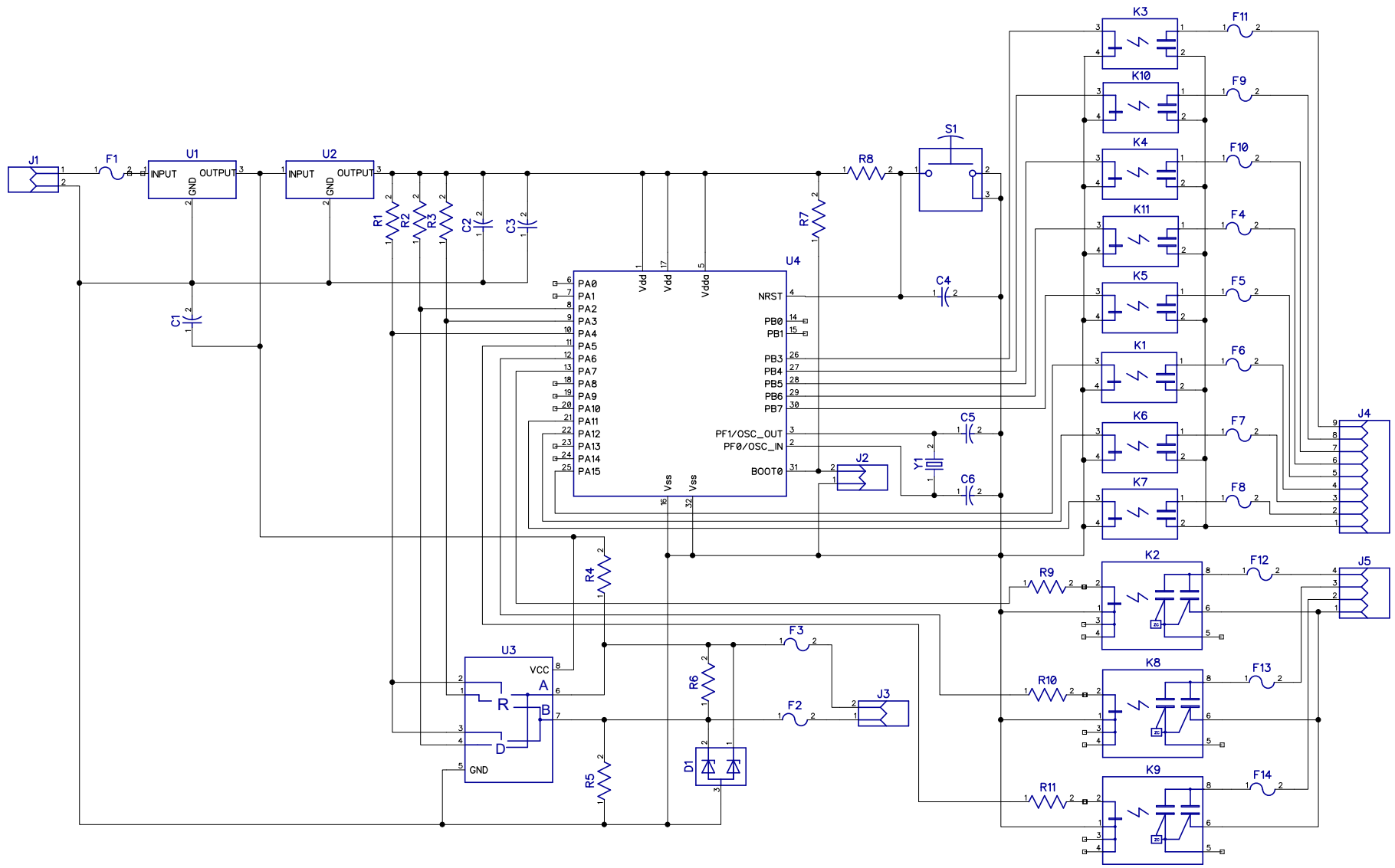

RefDes	Value
C1	0.1
C2	0.1
C3	220x6.3V
C4	0.1
C5	22
C6	22
D1	SM712
F1	1812 0.5A
F2	1812 0.1A
F3	1812 0.1A
F4	1812 1A
F5	1812 1A
F6	1812 1A
F7	1812 1A
F8	1812 1A
F9	1812 1A
F10	1812 1A
F11	1812 1A
F12	1812 0.5A
F13	1812 0.5A
F14	1812 0.5A
J1	
J2	
J3	
J4	
J5	
K1	G3MB-202P 5V
K2	AQH3213
K3	G3MB-202P 5V
K4	G3MB-202P 5V
K5	G3MB-202P 5V
K6	G3MB-202P 5V
K7	G3MB-202P 5V
K8	AQH3213
K9	AQH3213
K10	G3MB-202P 5V
K11	G3MB-202P 5V
R1	10k
R2	10k
R3	10k
R4	20k
R5	20k
R6	120
R7	10k
R8	10k
R9	100
R10	100
R11	100
S1	Reset
U1	MP1584 5V
U2	AMS1117-3.3
U3	MAX485ESA
U4	STM32F030K6T6
Y1	8MHz