RevNo	Revision note	Date	Signature	Checked

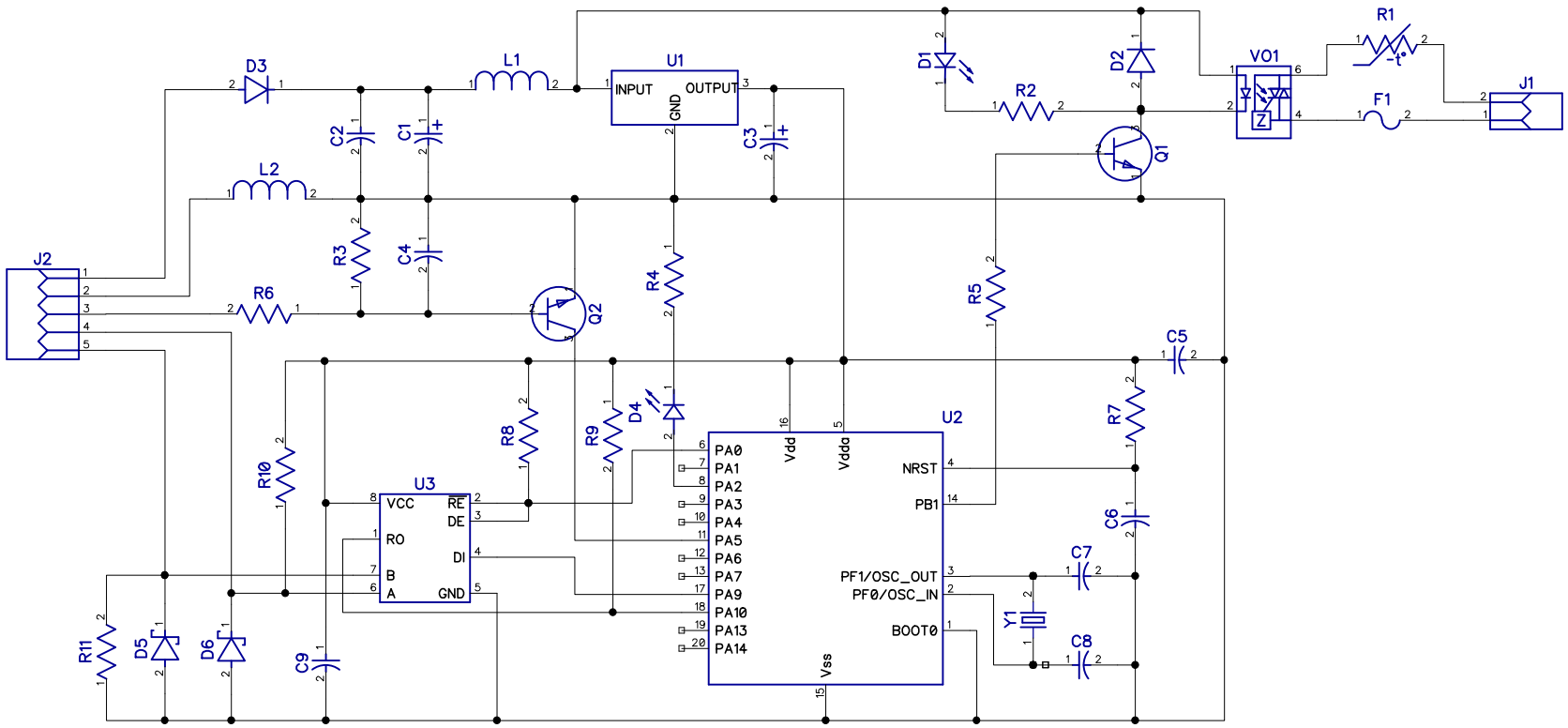

RefDes	Value
C1	100uf / 16V
C2	22n
C3	220uf / 10V
C4	10n
C5	100n
C6	100n
C7	22
C8	22
C9	100n
D1	2x5mm Rectangular
D2	
D3	SS54
D4	2x5mm Rectangular
D5	TVS
D6	TVS
F1	1A
J1	OUTPUT
J2	
L1	
L2	
Q1	
Q2	
R1	NTC47D-15 47D-15
R2	3.3k
R3	3.3k
R4	3.3k
R5	1k
R6	10k
R7	4.7k
R8	4.7k
R9	4.7k
R10	4.7k
R11	4.7k
U1	AMS1117-3.3
U2	STM32F030F4P6
U3	TP8485E
VO1	G3MB-202P
Y1	8MHz

Itemref	Quantity	Title/Name, designation, material, dimension etc		Article No./Reference	
Designed by		Checked by	Approved by - date - 00/00/00	File name	Date 00/00/00	Scale 1:1
					Edition 0	Sheet 1/1