RevNo	Revision note	Date	Signature	Checked

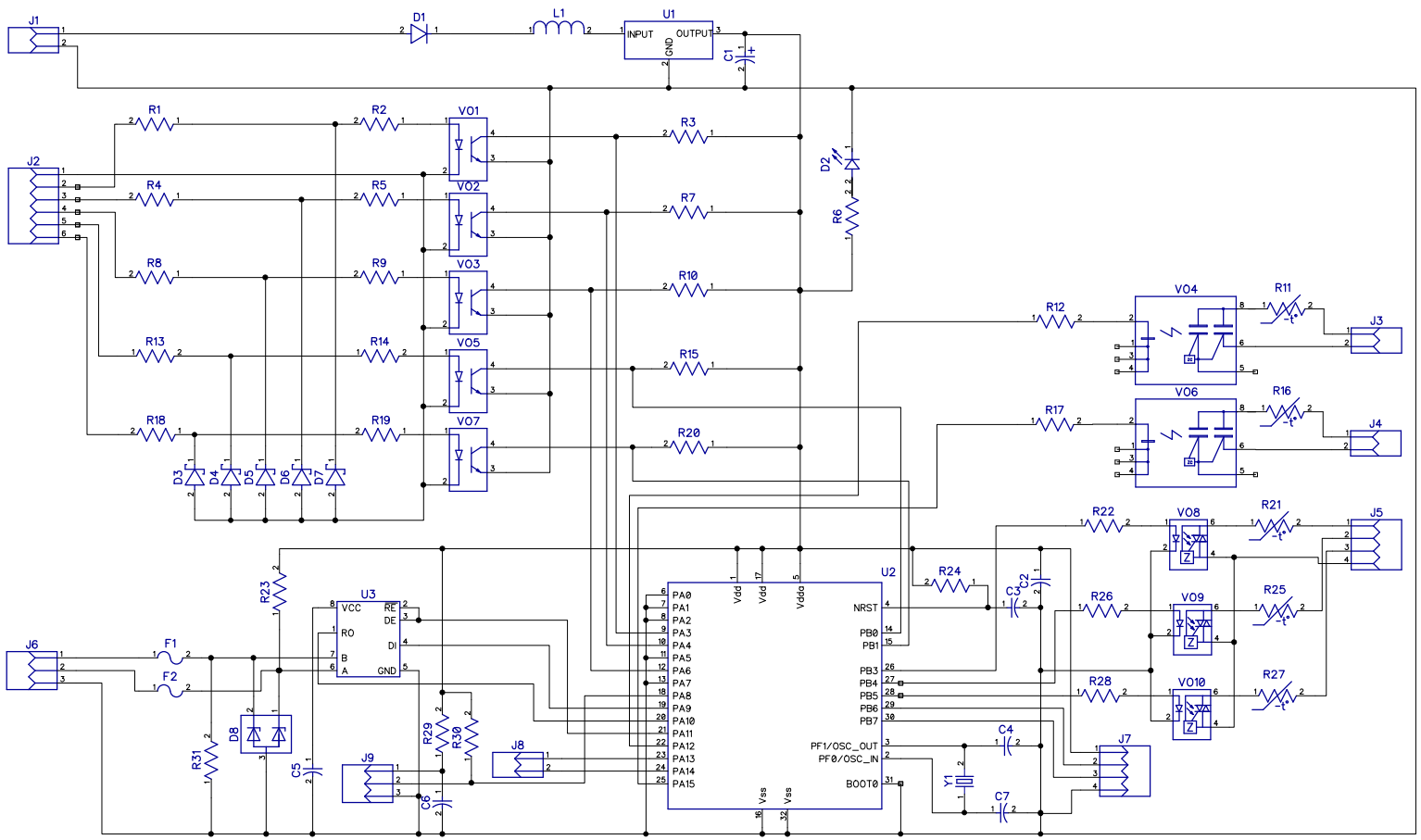

RefDes	Value
C1	220uf / 6.3V
C2	100n
C3	100n
C4	22
C5	100n
C6	100n
C7	22
D1	SS110
D2	Power
D3	TVS
D4	TVS
D5	TVS
D6	TVS
D7	TVS
D8	SM712
F1	1812 0.1A
F2	1812 0.1A
J1	Power
J2	Input 1, 2, 3, 4, 5
J3	Output 1
J4	Output 2
J5	Output 3-5
J6	RS485
J7	HTU21D
J8	SWD
J9	DS18B20
L1	68uH
R1	1k
R2	150
R3	10k
R4	1k
R5	150
R6	1k
R7	10k
R8	1k
R9	150
R10	10k
R11	NTC22D-9
R12	100
R13	1k
R14	150
R15	10k
R16	NTC22D-9
R17	100
R18	1k
R19	150
R20	10k
R21	NTC47D-15
R22	100
R23	18k
R24	10k
R25	NTC47D-15
R26	100
R27	NTC47D-15
R28	100
R29	150
R30	3.3k
R31	18k
U1	MINI360 3.3V
U2	STM32F051K8T8
U3	ADM3485
VO1	PC817
VO2	PC817
VO3	PC817
VO4	AQH3213
VO5	PC817
VO6	AQH3213
VO7	PC817
VO8	HHG1D-1/032F-38-4A
VO9	HHG1D-1/032F-38-4A
VO10	HHG1D-1/032F-38-4A
Y1	8MHz

Itemref	Quantity	Title/Name, designation, material, dimension etc	Article No./Reference

Designed by	Checked by	Approved by - date - 00/00/00	File name	Date 00/00/00	Scale 1:1

Edition	Sheet
0	1/1