| RevNo | Revision note | Date | Signature | Checked |
|---|---|---|---|---|

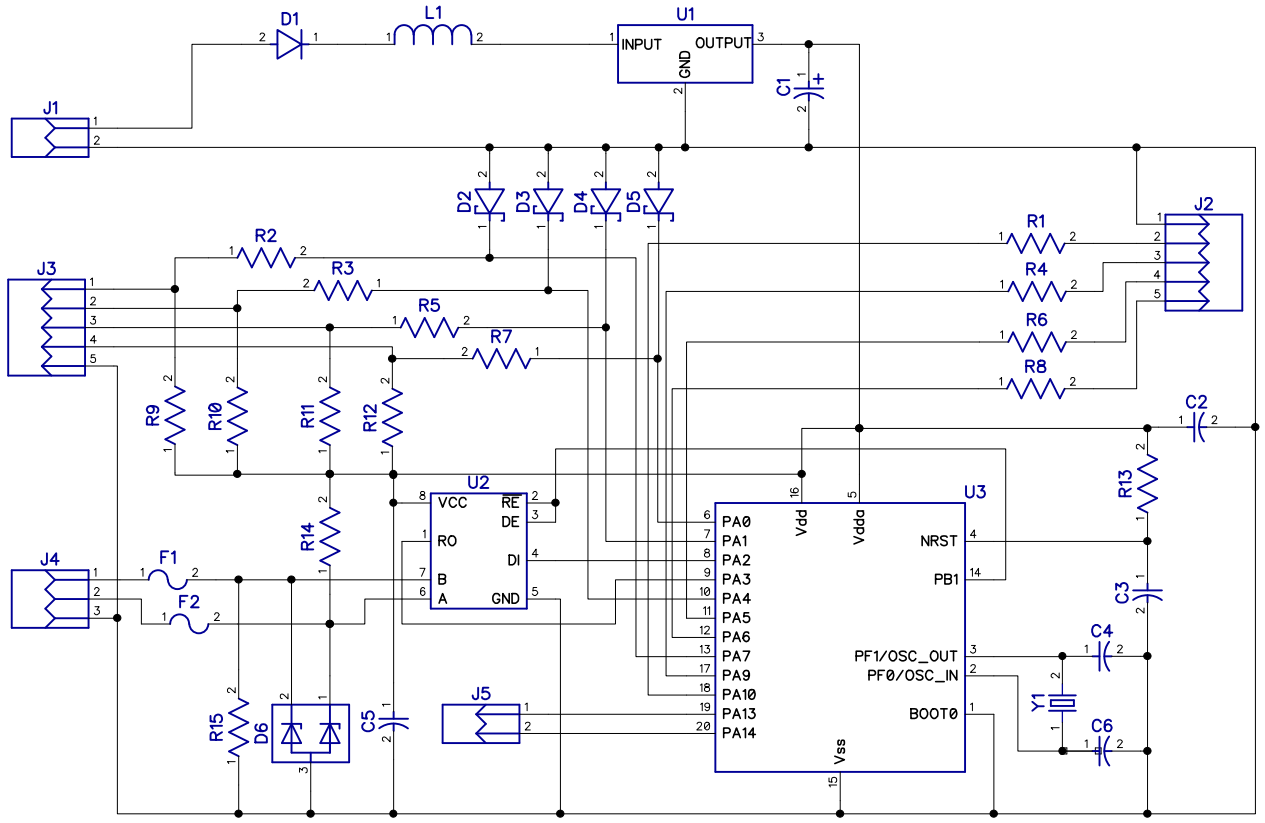


| RefDes | Value |
|---|---|
| C1 | 220u / 10V |
| C2 | 100n |
| C3 | 100n |
| C4 | 22 |
| C5 | 100n |
| C6 | 22 |
| D1 | SS110 |
| D2 | TVS |
| D3 | TVS |
| D4 | TVS |
| D5 | TVS |
| D6 | SM712 |
| F1 | 1812 0.1A |
| F2 | 1812 0.1A |
| J1 | POWER |
| J2 | OUTPUT |
| J3 | INPUT |
| J4 | RS485 |
| J5 | Fw Update |
| L1 | 68uH |
| R1 | 100 |
| R2 | 1k |
| R3 | 1k |
| R4 | 100 |
| R5 | 1k |
| R6 | 100 |
| R7 | 1k |
| R8 | 100 |
| R9 | 10k |
| R10 | 10k |
| R11 | 10k |
| R12 | 10k |
| R13 | 10k |
| R14 | 18k |
| R15 | 18k |
| U1 | MINI 360 3.3 |
| U2 | ADM3485 |
| U3 | STM32F070F4P6 |
| Y1 | 8MHz |

| Itemref | Quantity | Title/Name, designation, material, dimension etc | Article No./Reference |
|---|---|---|---|

| Designed by | Checked by | Approved by - date - 00/00/00 | File name | Date 00/00/00 | Scale 1:1 |
|---|---|---|---|---|---|
| | | | | Edition 0 | Sheet 1/1 |