RevNo	Revision note	Date	Signature	Checked

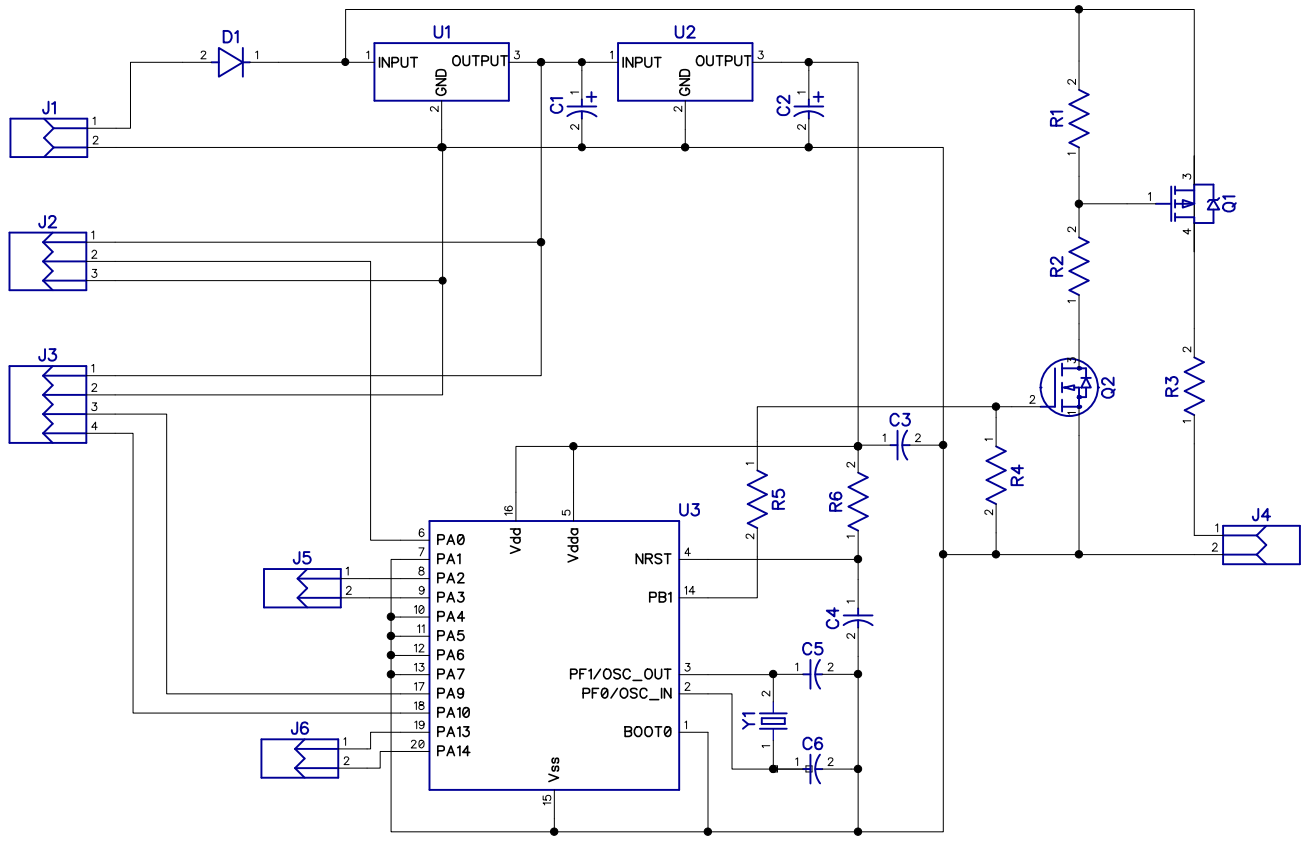

RefDes	Value
C1	220u / 10V
C2	220u / 10V
C3	10u
C4	100n
C5	22
C6	22
D1	SS110
J1	POWER
J2	PIR
J3	TOF
J4	Output
J5	Debug
J6	Fw Update
Q1	IRF4905S
Q2	BSH112
R1	2.7k
R2	2.7k
R3	1k
R4	10k
R5	1k
R6	10k
U1	MINI 360 5v
U2	AMS1117-3.3
U3	STM32F070F4P6
Y1	8MHz

Itemref	Quantity	Title/Name, designation, material, dimension etc	Article No./Reference

Designed by	Checked by	Approved by - date - 00/00/00	File name	Date 00/00/00	Scale 1:1
				Edition 0	Sheet 1/1