RevNo	Revision note	Date	Signature	Checked

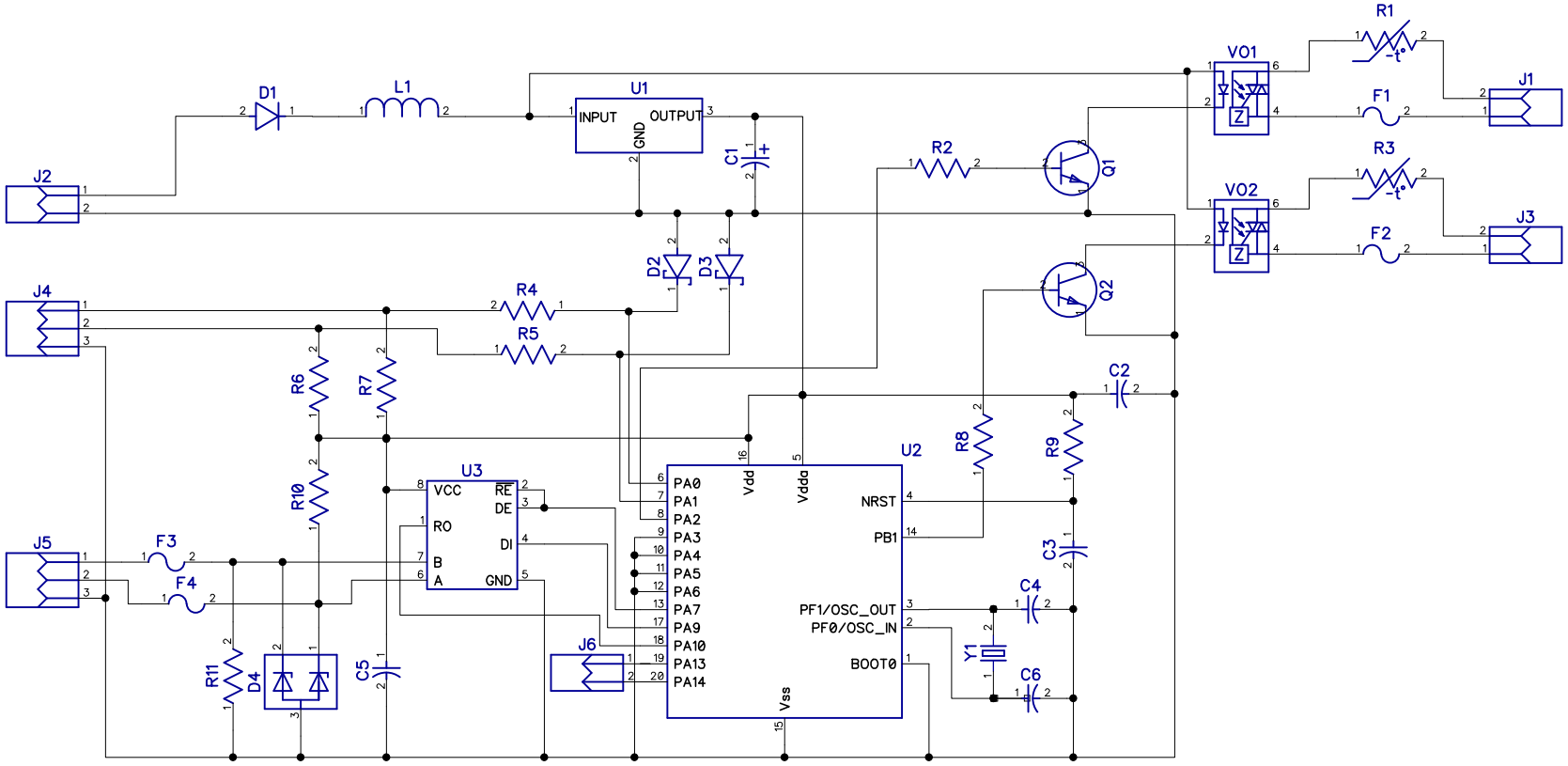

RefDes	Value
C1	220u / 10V
C2	100n
C3	100n
C4	22
C5	100n
C6	22
D1	SS110
D2	TVS
D3	TVS
D4	SM712
F1	1A
F2	1A
F3	1812 0.1A
F4	1812 0.1A
J1	OUTPUT1
J2	POWER
J3	OUTPUT2
J4	Input 1/2
J5	RS485
J6	Fw Update
L1	68uH
Q1	
Q2	
R1	NTC47D-15 47D-15
R2	10k
R3	NTC47D-15 47D-15
R4	1k
R5	1k
R6	10k
R7	10k
R8	10k
R9	10k
R10	18k
R11	18k
U1	MINI 360 3.3
U2	STM32F070F4P6
U3	ADM3485
VO1	G3MB-202P
VO2	G3MB-202P
Y1	8MHz

Itemref	Quantity	Title/Name, designation, material, dimension etc	Article No./Reference

Designed by	Checked by	Approved by - date - 00/00/00	File name	Date 00/00/00	Scale 1:1

Edition	Sheet
0	1/1