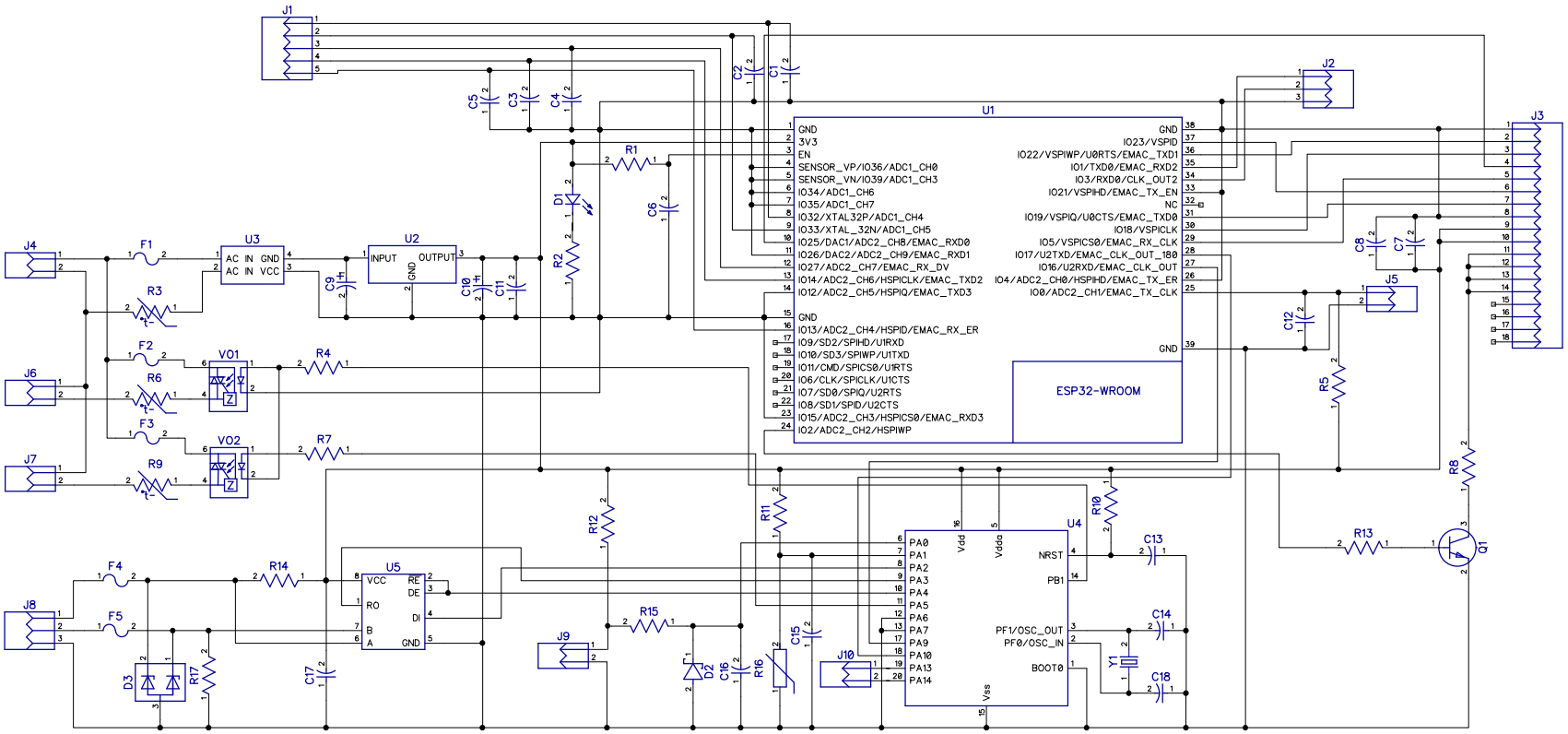

RefDes	Value
C1	10n
C2	10n
C3	10n
C4	10n
C5	10n
C6	100n
C7	10u
C8	100n
C9	470uf / 10V
C10	1000uf / 6.3V
C11	100n
C12	100n
C13	100n
C14	22
C15	100n
C16	100n
C17	100n
C18	22
D1	Power
D2	TVS
D3	SM712
F1	0.3A
F2	2A
F3	2A
F4	1812 0.1A
F5	1812 0.1A
J1	Touch buttons
J2	FW Update
J3	LCD
J4	AC
J5	Program
J6	LOAD
J7	LOAD 2
J8	RS485
J9	Thermistor
J10	Program
Q1	BC817
R1	10k
R2	1k
R3	NTC47D-15
R4	100
R5	10k
R6	NTC47D-15
R7	100
R8	20
R9	NTC47D-15
R10	10k
R11	10k
R12	10k
R13	5.1k
R14	18k
R15	1k
R16	10k
R17	18k
U1	ESP32-WROOM
U2	AMS1117-3.3
U3	HLK-PM01
U4	STM32F070F4P6
U5	ADM3485
VO1	HHG1D-1/032F-38-4A
VO2	HHG1D-1/032F-38-4A
Y1	8MHz