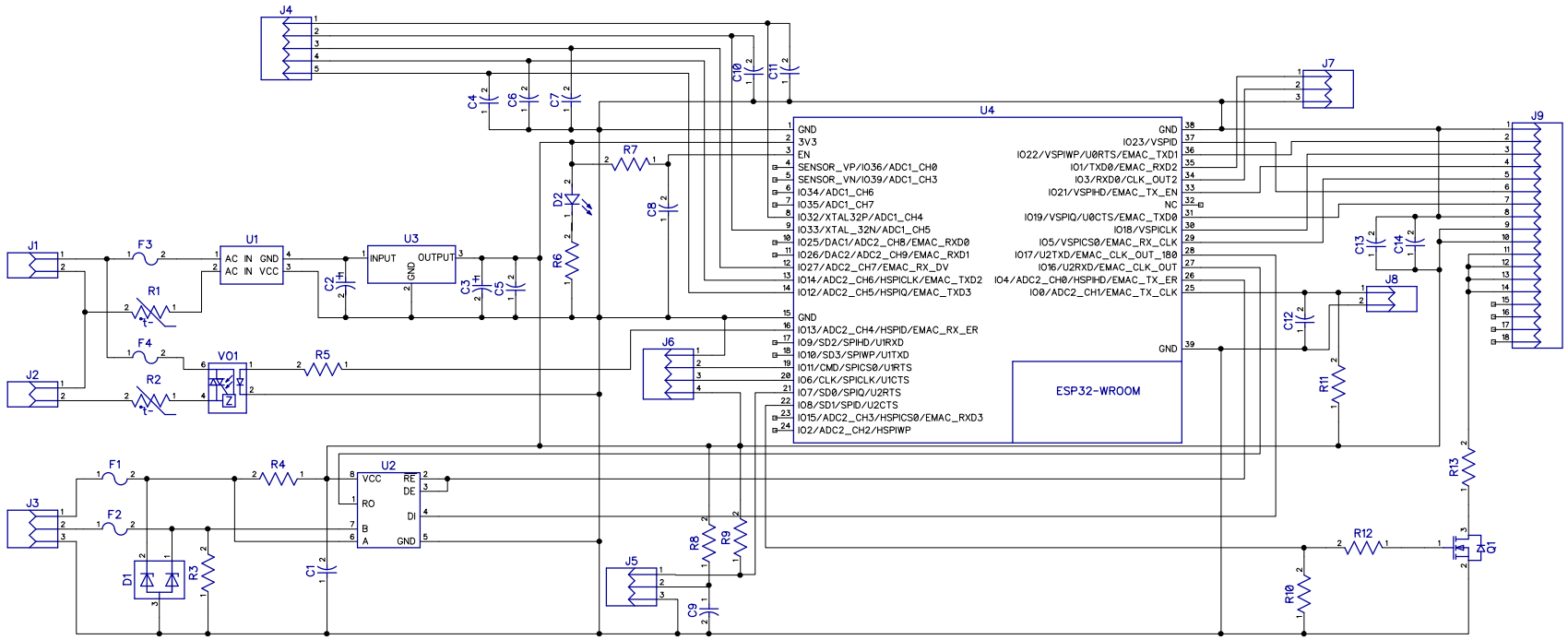

RefDes	Value
C1	100n
C2	470uf / 10V
C3	1000uf / 6.3V
C4	10n
C5	100n
C6	10n
C7	10n
C8	100n
C9	100n
C10	10n
C11	10n
C12	100n
C13	100n
C14	10u
D1	SM712
D2	Power
F1	1812 0.1A
F2	1812 0.1A
F3	0.3A
F4	2A
J1	AC
J2	LOAD
J3	RS485
J4	Touch buttons
J5	DS18B20
J6	HTU21D
J7	FW Update
J8	Program
J9	LCD
Q1	BSH112
R1	NTC47D-15
R2	NTC47D-15
R3	18k
R4	18k
R5	100
R6	1k
R7	10k
R8	150
R9	3.3k
R10	10k
R11	10k
R12	27
R13	15
U1	HLK-PM01
U2	ADM3485
U3	AMS1117-3.3
U4	ESP32-WROOM
VO1	HHG1D-1/032F-38-4A