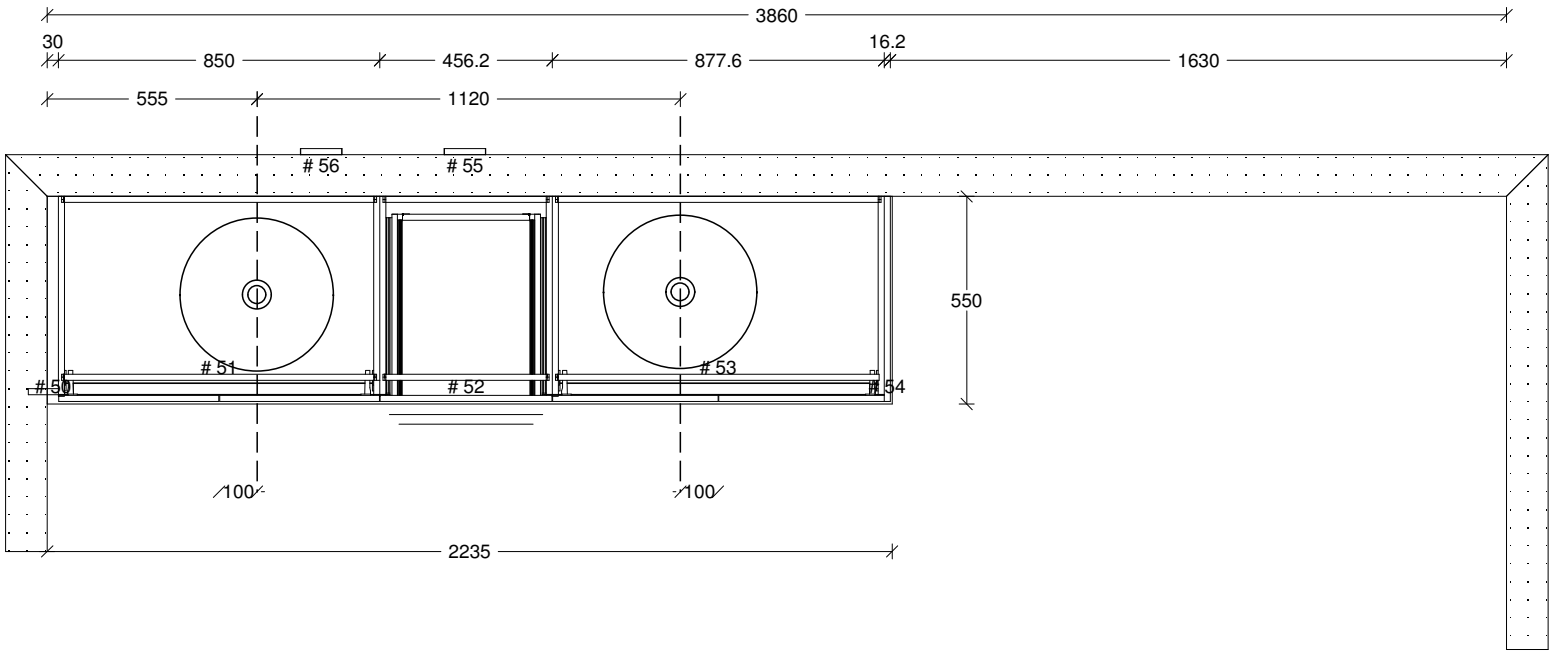

Stone To Overhang 5mm From Doors

ENS

Counter Top - CaesarStone Frozen Terra	20mm Polished edge with P/R
Door Style - E1 Slab Door	1mm ABS
Door Material - E1 MDFGrCol-16-1	Polyec Tasmanian Oak Woodmatt
Drawers	Hett Atira White V6 Slnt 30kg
Handles - No Handles	L Shaped Finger Rail
Bases (Toes)	Floating

Challenge Cabinets - (Michael)	Date: 07/10/20
Job No: RUBY - Ewen - Ostend - Coast	
Address: #43 Ewen St, Scarbotough	

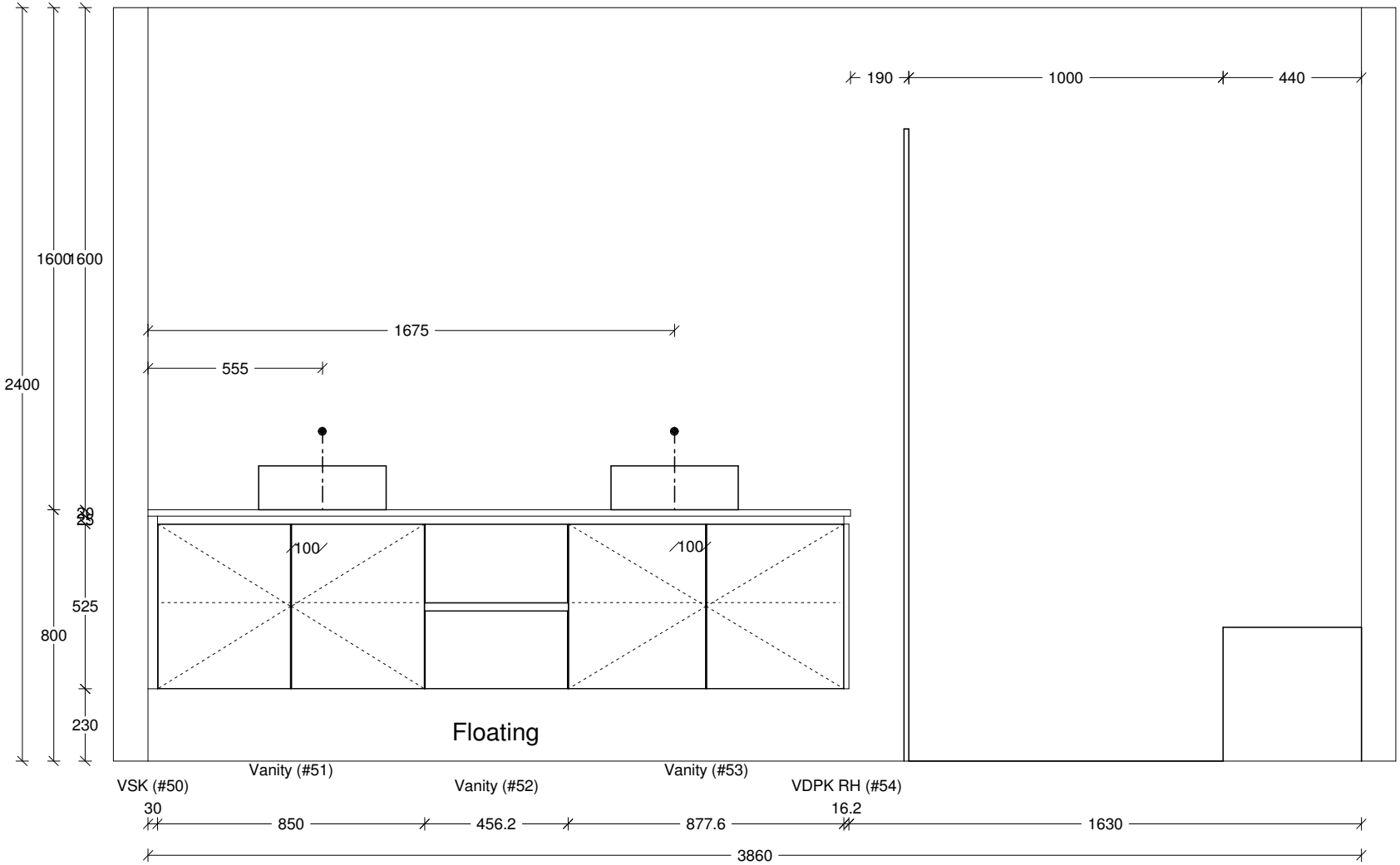

Challenge Cabinets - (Michael)	Date: 07/10/20
Job No: RUBY - Ewen - Ostend - Coast	
Address: #43 Ewen St, Scarbotough	