LAU School of Engineering

ELE 537, Communication Systems
Exam 2, Fall 2020
Instructor: Dr. Chadi Abou-Rjeily

Problem 1: (4 points)
The data stream 01101001 appears at the input of a differential encoder. Assuming that the reference bit is equal to 0, find the data stream that appears at the output.

Input Sequence		0	1	1	0	1	0	0	1
Encoded Sequence	0	0	1	0	0	1	1	1	0

Problem 2: (6 points)
Five regenerative repeaters are cascaded in series where the probability of error of each of these repeaters is equal to 0.3. Find the error probability at the output of the system.

$$
\begin{aligned}
P &= \sum_{i=1\ ;\ i \text{ odd}}^{m} \binom{m}{i} P_e^i (1-P_e)^{m-i} \\
&= \binom{5}{1} 0.3^1 0.7^4 + \binom{5}{3} 0.3^3 0.7^2 + \binom{5}{5} 0.3^5 0.7^0 \\
&= 0.3601 + 0.1323 + 0.0024 = 0.4949
\end{aligned}
$$

Problem 3: (8 points)
Consider the signal $w(t)$ whose probability density function is given by: $f_w(x) = \text{tri}(x)$.
Is it better to apply 5-bit uniform quantizing or 6-bit μ-law quantizing with $\mu = 10$ on the signal $w(t)$?

$$\begin{aligned} \text{Uniform quantizing}: \quad & \alpha = 4.77 - 20\log_{10}(V/x_{rms}) \\ \mu\text{-law}: \quad & \alpha = 4.77 - 20\log_{10}[\ln(1+\mu)] \end{aligned}$$

$$\bar{x} = \int_{-1}^{+1} \underbrace{x}_{\text{odd}} \underbrace{f_w(x)}_{\text{even}} \mathrm{d}x = 0 \qquad (f_w(x) \text{ centered at } \bar{x} = 0)$$

$$\begin{aligned} x_{rms}^2 &= \int_{-1}^{+1} (x-\bar{x})^2 f_w(x)\mathrm{d}x \\ &= \int_{-1}^{+1} \underbrace{x^2}_{\text{even}} \underbrace{f_w(x)}_{\text{even}} \mathrm{d}x = 2\int_0^1 x^2(1-x)\mathrm{d}x = 2\left[\frac{x^3}{3} - \frac{x^4}{4}\right]_0^1 = \frac{1}{6} \end{aligned}$$

- Uniform quantizing:

$$\left.\frac{S}{N}\right)_{\text{uni,dB}} = 6\times 5 + \left[4.77 - 20\log_{10}\left(\frac{1}{1/\sqrt{6}}\right)\right] \approx 27 \ \text{ dB}$$

- μ-law quantizing:

$$\left.\frac{S}{N}\right)_{\mu,\text{dB}} = 6\times 6 + [4.77 - 20\log_{10}[\ln(1+10)]] \approx 33.17 \ \text{ dB}$$

- $\left.\frac{S}{N}\right)_{\mu,\text{dB}} > \left.\frac{S}{N}\right)_{\text{uni,dB}}$ implying that μ-law quantizing is better.

Problem 4: (7 points)
3-bit uniform quantizing is applied on the signal $w(t) = \cos(200\pi t)$ that is sampled at five times the Nyquist rate. Will the samples $x[0]$ and $x[1]$ be represented by the same codeword?

$$\Delta = \frac{D}{M} = \frac{1-(-1)}{8} = 0.25$$

implying that the quantization intervals are given by $[-1 \quad -0.75]$, $[-0.75 \quad -0.5]$, $[-0.5 \quad -0.25]$, $[-0.25 \;\; 0]$, $[0 \;\; 0.25]$, $[0.25 \;\; 0.5]$, $[0.5 \;\; 0.75]$ and $[0.75 \;\; 1]$.

$$f_s = 5 \times f_{Nyq} = 5 \times (2 \times 100) = 1000 \quad \text{samples/s}$$

$$x[n] = x(nTs) = \cos\left(200\pi \frac{n}{1000}\right) = \cos(0.2\pi n) \Rightarrow \quad x[0] = 1 \; ; \; x[1] = 0.809$$

$x[0]$ and $x[1]$ belong to the same quantization interval $[0.75 \;\; 1]$ implying that these samples will be represented by the same codeword.

Problem 5: (10 points: (5×2))
Answer by true or false (*penalty*: an incorrect answer cancels a correct answer):

a. Unipolar codes require a DC coupled channel. True

b. For the bipolar RZ code, the timing information can not be recovered for a long sequence of 1's. False

c. A single power supply is needed to generate the polar NRZ line code. False

d. Assume that the 0's and 1's are generated with the following probabilities: $\Pr(0) = \frac{1}{4}$ and $\Pr(1) = \frac{3}{4}$. In this case, the DC value of the Manchester NRZ code is different from zero. False

e. Regenerative repeaters are used with digital signals. True

Problem 6: (6 points: $(3,3)$**)**
Consider a raised cosine-rolloff Nyquist filter having a rolloff factor of 0.5 and a 6-dB bandwidth of 1 kHz.

a. Find the value of the absolute bandwidth.

b. Find the value of the maximum baud rate that can be supported without inter-symbol-interference.

$r = 0.5$ and $f_0 = 1$ kHz:

a. $B = f_0(1+r) = 1.5$ kHz.

b. $D = 2f_0 = \frac{2B}{1+r} = 2$ kbauds.

Problem 7: (7 points)
Consider the filter whose transfer function $H(f)$ is shown in the figure below:

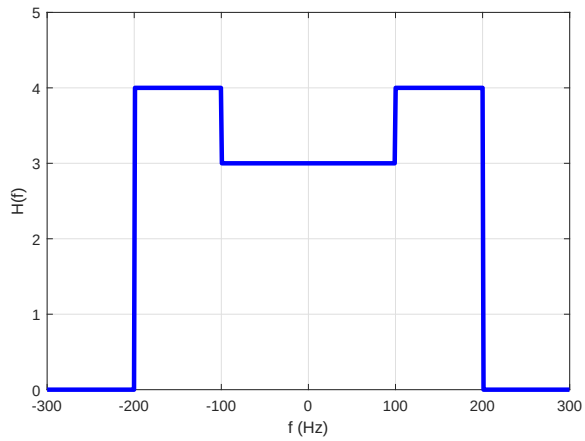

Determine if this filter satisfies Nyquist's first method for eliminating the ISI at a baud rate of 400 bauds (*hint*: write down $H(f)$ as the difference of two rectangular functions).

$$
\begin{aligned}
H(f) &= 4\text{rect}\left(\frac{f}{400}\right) - \text{rect}\left(\frac{f}{200}\right) \\
\Rightarrow \quad h(t) &= 1600\text{sinc}(400t) - 200\text{sinc}(200t) \\
\Rightarrow \quad h(kT_s) &= h\left(\frac{k}{D}\right) = h\left(\frac{k}{400}\right) \\
&= 1600\text{sinc}(k) - 200\text{sinc}\left(\frac{k}{2}\right)
\end{aligned}
$$

For k odd, $h(kT_s) = 1600\underbrace{\text{sinc}(k)}_{=0} - 200\underbrace{\text{sinc}\left(\frac{k}{2}\right)}_{\neq 0} \neq 0$ implying that the filter does not satisfy Nyquist's first method for eliminating the ISI.

Problem 8: (13 points: $(3,2,4,2,2)$**)**
A 1-kbaud 8-level digital signal using sinc-type pulses is shown in the figure below.

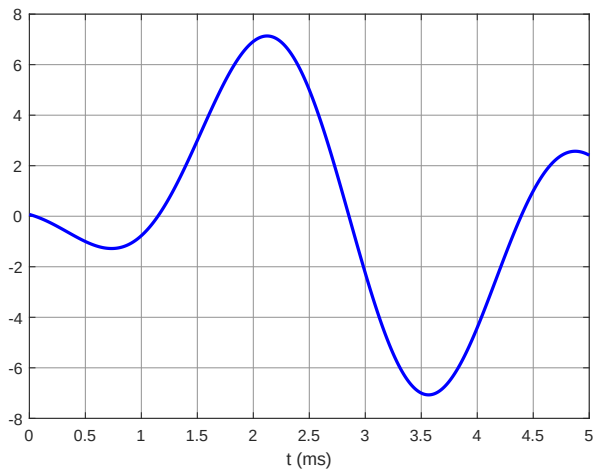

a. Find the values of the symbol duration and bit duration.

b. Find the value of the bit rate.

c. Find the values of the transmitted symbols.

d. Provide an estimate of the occupied bandwidth.

e. Will the bandwidth increase or decrease if rectangular-type pulses are used? Justify your answer.

a. $T_s = \frac{1}{D} = 1$ ms implying that $T_b = \frac{T_s}{3} = 0.33$ ms.

b. $R = \frac{1}{T_b} = 3$ kbits/s.

c. Sampling at the centers of the symbol intervals (at $t = 0.5, 1.5, 2.5, 3.5$ and 4.5) implies that the symbols are given by $\{-1, +3, +5, -7, +1\}$.

d. $\text{sinc}\left(\frac{t}{T_s}\right) \rightleftharpoons T_s \text{rect}(T_s f)$ implying that the null bandwidth is $B = \frac{1}{2T_s} = \frac{D}{2} = 500$ Hz.

e. The bandwidth will increase since $B \geq \frac{1}{2}D$ with equality if and only if sinc-type pulses are used implying that any other type of pulses will increase the bandwidth.

Problem 9: (17 points: $(2,6,4,4,1)$**)**
The **bipolar (pseudo-ternary) non-return to zero (NRZ)** line code is used to convey a random data pattern consisting of binary 0's and 1's. Denote by T_b the time needed to transmit one bit and denote the high amplitude level by A. Assume that the data is independent and equiprobable.

a. Give the expression of the pulse shape and determine its Fourier transform.

b. Providing all necessary calculations, show that the autocorrelation function of the data is given by:

$$R(k) = \begin{cases} aA^2, & k = 0; \\ bA^2, & |k| = 1; \\ 0, & \text{otherwise.} \end{cases}$$

where a and b are two constants to be determined.

c. Derive the expression of the power spectral density.

d. Relate the null bandwidth to the bit rate R.

e. Deduce the value of the spectral efficiency.

a. $f(t) = \text{rect}\left(\frac{t}{T_s}\right) \Rightarrow F(f) = T_s \text{sinc}(T_s f)$ with $T_s = T_b$.

b. - For $k = 0$:

a_n	a_n^2	Pr
0	0	1/2
$\pm A$	A^2	1/2

implying that $R(0) = \frac{A^2}{2}$.

- For $|k| = 1$:

a_n	a_{n+k}	$a_n a_{n+k}$	Pr
0	0	0	$\frac{1}{2} \times \frac{1}{2} = \frac{1}{4}$
0	$\pm A$	0	$\frac{1}{2} \times \frac{1}{2} = \frac{1}{4}$
$\pm A$	0	0	$\frac{1}{2} \times \frac{1}{2} = \frac{1}{4}$
$\pm A$	$\mp A$	$-A^2$	$\frac{1}{2} \times \frac{1}{2} = \frac{1}{4}$

implying that $R(k) = -\frac{A^2}{4}$ for $|k| = 1$ (the signals representing two consecutive 1's have opposite polarities).

- For $k \neq 0, \pm 1$:

a_n	a_{n+k}	$a_n a_{n+k}$	Pr
0	0	0	$\frac{1}{2} \times \frac{1}{2} = \frac{1}{4}$
0	$\pm A$	0	$\frac{1}{2} \times \frac{1}{2} = \frac{1}{4}$
$\pm A$	0	0	$\frac{1}{2} \times \frac{1}{2} = \frac{1}{4}$
$\pm A$	$\pm A$	A^2	$\frac{1}{2} \times \frac{1}{2} \times \frac{1}{2} = \frac{1}{8}$
$\pm A$	$\mp A$	$-A^2$	$\frac{1}{2} \times \frac{1}{2} \times \frac{1}{2} = \frac{1}{8}$

implying that $R(k) = 0$ for $k \neq 0, \pm 1$. The signals representing two 1's will have the same (resp. opposite) polarities if there is an odd (resp. even) number of 1's between a_n and a_{n+k} with probability $1/2$ (resp. $1/2$) since the data is equiprobable.

c.

$$\begin{aligned}\mathcal{P}_s(f) &= \frac{1}{T_b} T_b^2 \text{sinc}^2\left(T_b f\right)\left[\frac{A^2}{2} - \frac{A^2}{4}\left(e^{-j2\pi T_b f} + e^{j2\pi T_b f}\right)\right] \\ &= \frac{A^2 T_b}{2} \text{sinc}^2\left(T_b f\right)\left[1 - \cos(2\pi T_b f)\right] \\ &= A^2 T_b \text{sinc}^2\left(T_b f\right) \sin^2(\pi T_b f)\end{aligned}$$

d.
- $\text{sinc}\left(T_b f\right) = 0$ when f is a non-zero multiple of $R = \frac{1}{T_b}$.
- $\sin(\pi T_b f) = 0$ when f is a multiple of R.
- Consequently, $\mathcal{P}_s(f) = 0$ at multiples of R and the null-to-null bandwidth is equal to R.

e.

$$\eta = \frac{R}{B} = \frac{R}{R} = 1 \text{ bits/s/Hz}$$

Problem 10: (8 points + 5 points: $(1,2,2,3)+(5)$)
Consider the TDM system shown in the figure below:

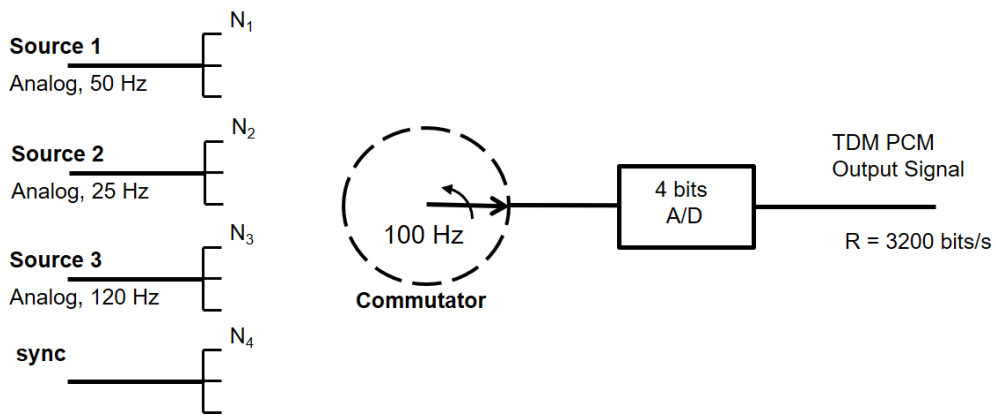

- Source 1: analog with a bandwidth of 50 Hz and is connected N_1 times to the commutator.
- Source 2: analog with a bandwidth of 25 Hz and is connected N_2 times to the commutator.
- Source 3: analog with a bandwidth of 120 Hz and is connected N_3 times to the commutator.
- N_4 synchronisation channels are used.

The output TDM PCM signal has a bit rate of 3200 bits/s.

a. Find the value of N_1.

b. Find the value of N_2.

c. Find the value of N_3.

d. Find the value of N_4.

e. ***(extra-credit)*** Find the value of the effective throughput (in %).

a. Source 1 needs to be samples at least at 100 Hz implying that $N_1 = 1$.

b. Source 2 needs to be samples at least at 50 Hz implying that $N_2 = 1$.

c. Source 3 needs to be samples at least at 240 Hz implying that $N_3 = 3$.

d. $R = (N_1 + N_2 + N_3 + N_4) \times 100 \times 4 \;\Rightarrow\; 3200 = (5 + N_4) \times 400 \;\Rightarrow\; N_4 = 3$.

e. $\eta_{eff} = \frac{\text{\# of information bits}}{\text{total \# of bits}} \times 100\% = \frac{(N_1+N_2+N_3)\times f_s \times 4}{(N_1+N_2+N_3+N_4)\times f_s \times 4} \times 100\% = \frac{N_1+N_2+N_3}{N_1+N_2+N_3+N_4} \times 100\% = 62.5\%$.

Problem 11: (6 points: $(3,3)$**)**
The following frame synchronizer is implemented at the receiver side:

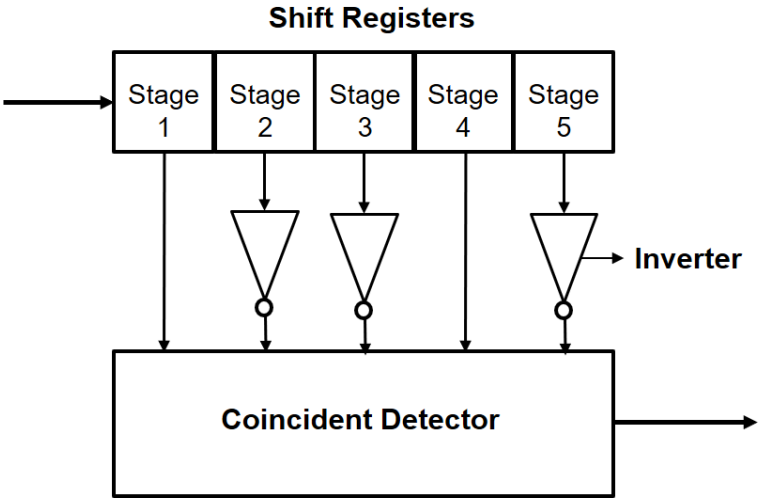

a. Find the value of the synchronisation word.

b. Find the probability of false alarm if the data is independent and equiprobable.

a. $\mathbf{s} = (1,0,0,1,0)$ since the presence (resp. absence) of an inverter indicates a 0 (resp. 1).

b. $P_f = 2^{-K} = 2^{-5} = 0.0313$.

Problem 12: (8 points)
The purpose of this problem is to design a TDM system that allows to accommodate the following sources:

- One analog source having a bandwidth of 760 Hz.
- Four synchronous and digital sources having a data rate of 600 bits/s.

where:

. The analog samples will be encoded into 3-bit PCM codewords.

. Synchronization bits are not required.

. Pulse stuffing is not allowed.

. Only two commutators can be used.

Draw a block diagram for your design indicating the data rates at various points of your diagram.

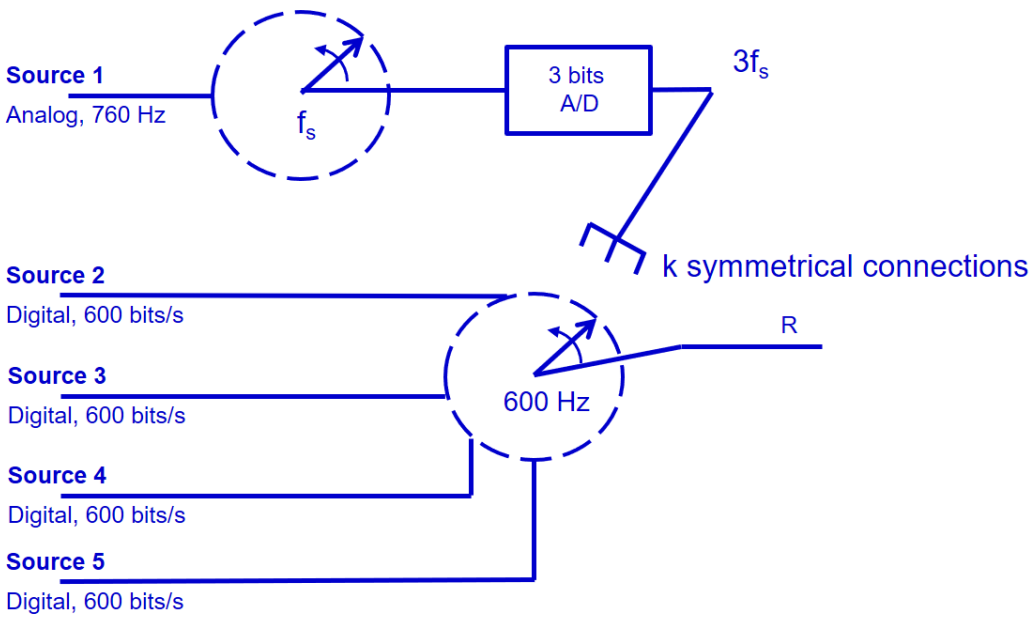

$$3f_s = k \times 600 \;\Rightarrow\; f_s = 200k$$
$$f_s \geq 2 \times 760 = 1520 \;\Rightarrow\; 200k \geq 1520 \;\Rightarrow\; k \geq 7.6 \;\Rightarrow\; k = 8 \;\Rightarrow\; f_s = 1600 \text{ Hz}$$

$$R = (4+k) \times 600 = 12 \times 600 = 7200 \text{ bits/s}$$