LAU
School of Engineering

ELE 537, Communication Systems
Exam 2, Fall 2023
Instructor: Dr. Chadi Abou-Rjeily

Name: _____
ID: _____
Section: _____

Question #	Points	Student Score
1	5	
2	5	
3	5	
4	7	
5	8	
6	10	
7	15	
8	7	
9	8	
10	10	
11	8	
12	12	

Problem 1: (5 points)
4 identical regenerative repeaters are cascaded in series along a communication channel where each repeater has an error probability of 0.1. What is the error probability at the output of the system?
For $m = 4$ repeaters with $p = 0.1$:

$$\begin{aligned}
P_e &= \sum_{i=1\ ,\ i \text{ odd}}^{m} \binom{m}{i} p^i (1-p)^{m-i} \\
&= \sum_{i=1,3} \binom{4}{i} p^i (1-p)^{4-i} \\
&= \binom{4}{1} p^1 (1-p)^3 + \binom{4}{3} p^3 (1-p)^1 \\
&= 4 \times 0.1 \times 0.9^3 + 4 \times 0.1^3 \times 0.9 = 0.2952
\end{aligned}$$

Problem 2: (5 points: $(1,1,3)$**)**

a. Write down the differential encoding rule relating the encoded bits $\{e_n\}$ to the information bits $\{d_n\}$.

b. Write down the differential decoding rule relating the reconstructed bits $\{\tilde{d}_n\}$ to the received bits $\{\tilde{e}_n\}$.

c. Deduce from parts (a) and (b) that $\tilde{d}_n = d_n$ when $\tilde{e}_n = \bar{e}_n$.

a. $e_n = d_n \oplus e_{n-1}$.

b. $\tilde{d}_n = \tilde{e}_n \oplus \tilde{e}_{n-1}$.

c. For $\tilde{e}_n = \bar{e}_n$:

$$\begin{aligned}
\tilde{d}_n &= \bar{e}_n \oplus \bar{e}_{n-1} \\
&= \overline{(d_n \oplus e_{n-1})} \oplus \bar{e}_{n-1} \\
&= d_n \oplus \underbrace{\bar{e}_{n-1} \oplus \bar{e}_{n-1}}_{=0} = d_n \oplus 0 = d_n
\end{aligned}$$

Problem 3: (5 points)
Experiments show that a DSL modem will fail to communicate reliably at speeds exceeding 60 Mbits/s. Find the signal-to-noise ratio (in dB) along the DSL cable if it has a bandwidth of 10 MHz.
Since reliable communications are possible at 60 Mbits/s at most, then the channel capacity is equal to $C = 60$ Mbits/s. Applying Shannon's theorem:

$$C = B\log_2\left(1+\frac{S}{N}\right)$$
$$\Rightarrow \frac{S}{N} = 2^{C/B} - 1 = 2^{60/10} - 1 = 63$$
$$\Rightarrow \left.\frac{S}{N}\right)_{\text{dB}} = 10\log_{10}(63) \approx 18 \ \ (\text{dB})$$

Problem 4: (7 points: $(3,4)$**)**
The nonlinear characteristics of the μ-law are approximated by piecewise linear chords as follows:

- 4 chords are used for the positive part of the signal.
- Each chord is approximated by a uniform quantizer with 16 steps.
- The step size in chord n is $n^2\Delta$.
- The same procedure is applied on the negative part of the signal.

a. Find the number of bits per PCM codeword.

b. Find the value of Δ if the analog waveform is limited to the interval $[-10 \;\; 10]$ Volts.

a. $n = 7$ bits (1 sign bit, 2 chord bits and 4 step bits).

b.

$$16\,[\Delta + 4\Delta + 9\Delta + 16\Delta] = 10$$
$$\Rightarrow \;\; \Delta = \frac{10}{16 \times 30} = \frac{1}{48} = 0.02083 \;\; \text{(V)}$$

Problem 5: (8 points: $(5,3)$**)**
A multi-level signal is shown in the figure below where this signal is used to convey 5 information symbols:

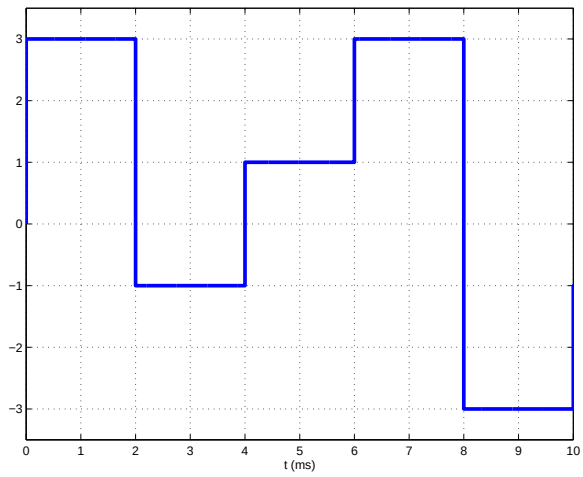

a. Find the values of the symbol duration, bit duration, baud rate and bit rate.

b. Answer by True or False:

b.1 The bandwidth will increase if the rect-type pulses are replaced with sinc-type pulses ————.

b.2 The bandwidth will increase if the number of levels is increased to 16 ————.

b.3 The bandwidth will increase if the above NRZ scheme is replaced with a RZ scheme ————.

a. From the figure, $T_s = \frac{10}{5} = 2$ ms and $L = 4$ levels implying that the bits are grouped in groups of $l = 2$ bits:

$$T_s = 2 \ \text{(ms)} \ \Rightarrow \ D = \frac{1}{T_s} = 500 \ \text{(bauds)}$$
$$T_b = \frac{T_s}{l} = 1 \ \text{(ms)} \ \Rightarrow \ R = \frac{1}{T_b} = 1000 \ \text{(bits/s)}$$

b. b.1 False.

b.2 False.

b.3 True.

Problem 6: (10 points: $(3,2,5)$**)**
4-level signaling is applied where the symbols are given by $\{-3,-1,+1,+3\}$. The Gray code is applied and the codeword 00 is mapped to the symbol $+1$.
Assume that sinc-type pulses are used at a bit rate of 10 kbits/s:

a. Find the values of the symbol duration and baud rate.

b. Find the value of the occupied bandwidth.

Assume that $\Pr(0) = 1/5$ and $\Pr(1) = 4/5$:

c. Find the value of the probability $\Pr(a_n \times a_{n+1} = -3)$.

a. $L = 4 \Rightarrow l = 2$. Therefore, $D = \frac{R}{l} = \frac{R}{2} = 5$ kbauds and $T_s = \frac{1}{D} = 0.2$ msec.

b. Since sinc-type pulses are used, $B = \frac{1}{2}D = 2.5$ kHz.

c. Applying the Gray code:

Codeword	Symbol	Probability
01	+3	$\frac{1}{5} \times \frac{4}{5} = \frac{4}{25}$
00	+1	$\frac{1}{5} \times \frac{1}{5} = \frac{1}{25}$
10	-1	$\frac{4}{5} \times \frac{1}{5} = \frac{4}{25}$
11	-3	$\frac{4}{5} \times \frac{4}{5} = \frac{16}{25}$

$$\begin{aligned}\Pr(a_n \times a_{n+1} = -3) &= \Pr(a_n = +1, a_{n+1} = -3) + \Pr(a_n = -1, a_{n+1} = +3) \\ &\quad + \Pr(a_n = -3, a_{n+1} = +1) + \Pr(a_n = +3, a_{n+1} = -1) \\ &= 2 \times \left[\frac{1}{25} \times \frac{16}{25} + \frac{4}{25} \times \frac{4}{25}\right] = \frac{64}{625} = 0.1024\end{aligned}$$

Problem 7: (15 points: $(2,4,3,6)$**)**
The **unipolar RZ** line code is used to convey a random data pattern consisting of binary 0's and 1's. Denote by T_b the time needed to transmit one bit and denote the high amplitude level by A. Assume that the data is independent and that the probability of transmitting a binary 0 is 1/3 and that of transmitting a binary 1 is 2/3. Assume that the pulse width is equal to $T_b/4$.

a. Give the expression of the pulse shape and determine its Fourier transform.

b. Find the autocorrelation of the data.

c. Find the expression of the average power and determine the value of A for which this power is normalized.

d. Derive the expression of the power spectral density (PSD). Where are the impulses in the PSD located?
hint: apply the Poisson sum formula: $\sum_{k\in\mathbb{Z}} e^{j2\pi k T_b f} = \frac{1}{T_b}\sum_{k\in\mathbb{Z}} \delta\left(f - \frac{k}{T_b}\right)$.

a. $f(t) = \text{rect}\left(\frac{t}{T_b/4}\right) \;\Rightarrow\; F(f) = \frac{T_b}{4}\text{sinc}\left(\frac{T_b}{4}f\right)$.

b. - For $k = 0$:

a_n	a_n^2	Pr
0	0	1/3
+ A	A^2	2/3

implying that $R(0) = \frac{2}{3}A^2$.

- For $k \neq 0$:

a_n	a_{n+k}	$a_n a_{n+k}$	Pr
0	0	0	$\frac{1}{3} \times \frac{1}{3} = \frac{1}{9}$
0	$+A$	0	$\frac{1}{3} \times \frac{2}{3} = \frac{2}{9}$
$+A$	0	0	$\frac{2}{3} \times \frac{1}{3} = \frac{2}{9}$
$+A$	$+A$	A^2	$\frac{2}{3} \times \frac{2}{3} = \frac{4}{9}$

implying that $R(k) = \frac{4}{9}A^2$ for $k \neq 0$.

c.

$$P_{av} = \frac{1}{3}\frac{1}{T_b}\int_0^{T_b/4}(0)^2\mathrm{d}t + \frac{2}{3}\frac{1}{T_b}\int_0^{T_b/4}(+A)^2\mathrm{d}t = \frac{A^2}{6}$$

$P_{av} = 1 \;\Rightarrow\; A = \sqrt{6}$.

d.

$$\begin{aligned}
\mathcal{P}_s(f) &= \frac{1}{T_b}\frac{T_b^2}{16}\text{sinc}^2\left(\frac{T_b}{4}f\right)\left[\frac{2A^2}{3} + \frac{4A^2}{9}\sum_{k=-\infty\,;\,k\neq 0}^{+\infty} e^{j2\pi k T_b f}\right] \\
&= \frac{T_b}{16}\text{sinc}^2\left(\frac{T_b}{4}f\right)\left[\frac{2A^2}{3} - \frac{4A^2}{9} + \frac{4}{9}A^2\sum_{k=-\infty}^{+\infty} e^{j2\pi k T_b f}\right] \\
&= \frac{T_b}{16}\text{sinc}^2\left(\frac{T_b}{4}f\right)\left[\frac{2A^2}{9} + \frac{4A^2}{9}\frac{1}{T_b}\sum_{k=-\infty}^{+\infty}\delta\left(f - \frac{k}{T_b}\right)\right] \\
&= \frac{A^2 T_b}{72}\text{sinc}^2\left(\frac{T_b}{4}f\right) + \frac{A^2}{36}\sum_{k=-\infty}^{+\infty}\text{sinc}^2\left(\frac{k}{4}\right)\delta\left(f - \frac{k}{T_b}\right)
\end{aligned}$$

where $\text{sinc}\left(\frac{k}{4}\right) = 0$ when k is a nonzero multiple of 4 implying that the impulses are located at $0, R, 2R, 3R, 5R, 6R, 7R, \ldots$.

Problem 8: (7 points)

Consider a filter whose transfer function is given by $H(f) = \text{tri}\left(\frac{f}{200}\right)$. Taking into account the inter-symbol-interference (ISI), which one of the three following options constitutes the best choice for the baud rate; (i): 100 bauds, (ii): 200 bauds or (iii): 400 bauds.

$$h(t) = 200\text{sinc}^2(200t)$$

- At $D_1 = 100$ bauds, $T_{s,1} = \frac{1}{100}$ s and:

$$h(kT_{s,1}) = 200\text{sinc}^2(2k) = \begin{cases} 200, & k = 0; \\ 0, & k \neq 0. \end{cases}$$

- At $D_2 = 200$ bauds, $T_{s,2} = \frac{1}{200}$ s and:

$$h(kT_{s,2}) = 200\text{sinc}^2(k) = \begin{cases} 200, & k = 0; \\ 0, & k \neq 0. \end{cases}$$

- At $D_3 = 400$ bauds, $T_{s,3} = \frac{1}{400}$ s and:

$$h(kT_{s,3}) = 200\text{sinc}^2(k/2) \neq 0 \ \text{ if } k \text{ is odd}$$

Therefore, the Nyquist first method for eliminating ISI is satisfied at $D_1 = 100$ bauds and $D_2 = 200$ bauds but not at $D_3 = 400$ bauds. Therefore, option $D_3 = 400$ bauds is not a valid option. Among D_1 and D_2, option $D_2 = 200$ bauds is better since the communication speed is higher.

Problem 9: (8 points: $(3,5)$**)**
Consider an analog signal $w(t)$ that is bandlimited to B_w Hz. The signal is sampled at ten times the Nyquist rate and each sample is quantized over one out of 128 possible levels. The generated bits are grouped in groups of 4 bits and transmitted over a channel with a raised cosine-rolloff Nyquist filter characteristics whose transfer function is shown below:

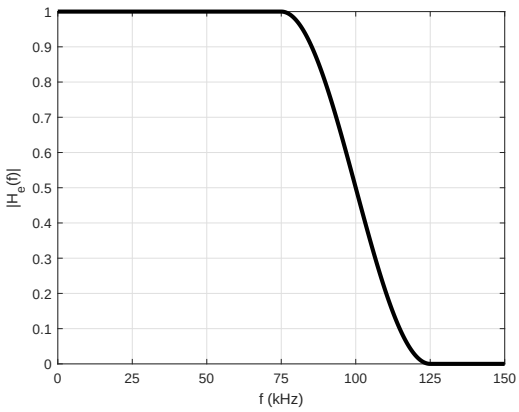

a. Find the rolloff factor of the filter.

b. Find the maximum value of B_w for which ISI is eliminated.

a. From the figure, $f_0 = 100$ kHz and $B = 125$ kHz implying that $f_\Delta = B - f_0 = 25$ kHz. Therefore, $r = \frac{f_\Delta}{f_0} = 0.25$.

b.
- $D = 2f_0 = 200$ kbauds.
- For $l = 4$ bits/group, $R = lD = 4 \times 200 = 800$ bits/s.
- $R = nf_s$ with $M = 2^n = 128 \;\Rightarrow\; n = 7$. Therefore, $f_s = \frac{800}{7}$ samples/s.
- For sampling at ten times the Nyquist rate: $f_s = 10 \times 2 \times B_w = \frac{800}{7}$ implying that $B_w = \frac{40}{7} = 5.7143$ kHz.

Problem 10: (10 points)
The purpose of this problem is to design a TDM system that allows to accommodate the following sources:

- One analog source having a bandwidth of 300 Hz.
- One analog source having a bandwidth of 900 Hz.
- Four synchronous and digital sources having a data rate of 570 bits/s.

where:

. The analog samples will be encoded into 4-bit PCM codewords.

. Only two commutators can be used.

. The analog sources must be sampled at their corresponding Nyquist rates.

. Pulse stuffing is allowed.

Draw a block diagram for your design indicating the data rates at various points of your diagram.

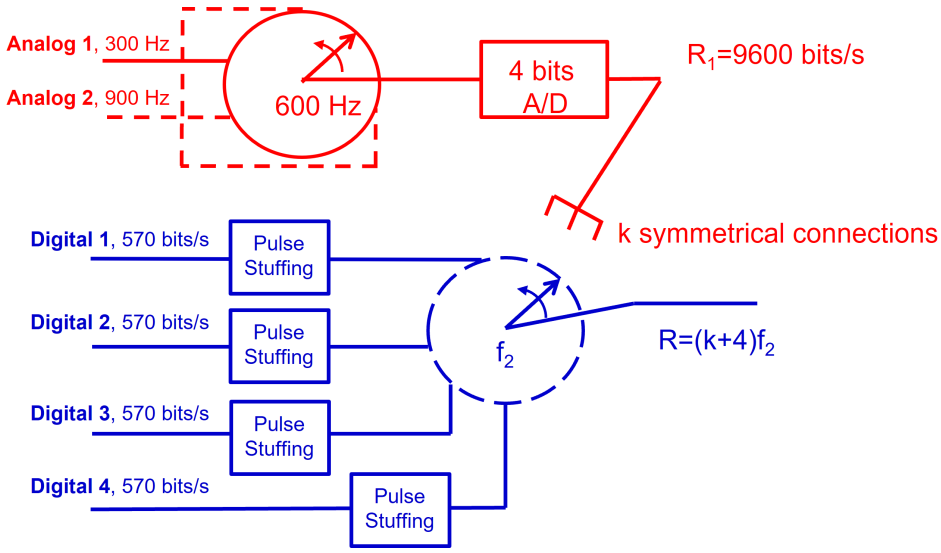

- Analog source 1 must be sampled at 600 Hz while Analog source 2 must be sampled at 1800 Hz. This can be achieved by using a commutator rotating at 600 Hz where Analog source 1 is connected once to the commutator while 3 symmetrical connections are used for Analog source 2.
- Solving for f_2 and k, the following two relations must be satisfied:

$$\left.\begin{array}{l} R_1 = 9600 = kf_2 \Rightarrow f_2 = \frac{9600}{k} \\ f_2 \geq 570 \end{array}\right\} \Rightarrow \frac{9600}{k} \geq 570 \quad \Rightarrow \quad k \leq 16.84$$
$$\Rightarrow \quad k = 16 \ \text{ and } \ f_2 = 600 \text{ Hz}$$

- Therefore: $R = (k+4) \times f_2 = 20 \times 600 = 12,000$ bits/s.

Problem 11: (8 points: $(3,1,4)$**)**
Consider the TDM system shown in the figure below:

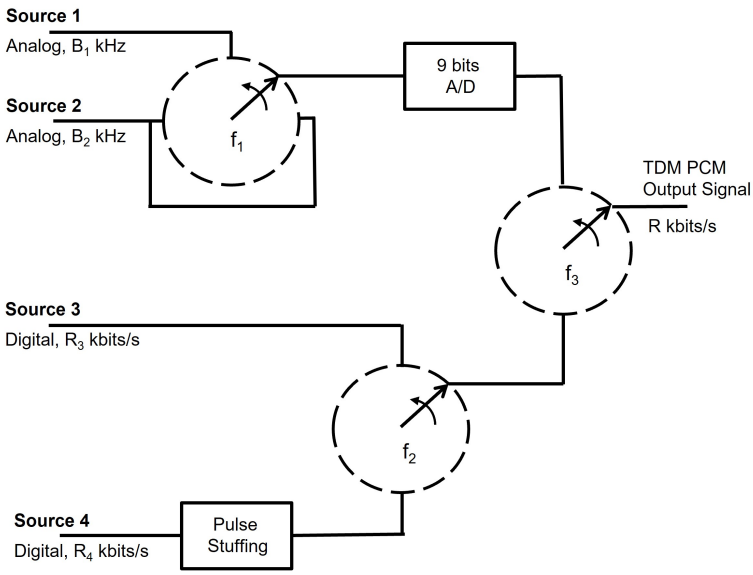

The output TDM PCM signal has a bit rate of 540 kbits/s.

a. Find the value of the bit rate R_3.

b. Suggest a value for the bit rate R_4.

c. Find the values of the bandwidths B_1 and B_2 if source 1 and source 2 are sampled at their corresponding Nyquist rates.

a.

$$R = 2f_3 \;\Rightarrow\; f_3 = 270 \text{ kHz}$$
$$f_3 = 2f_2 \;\Rightarrow\; f_2 = 135 \text{ kHz}$$

Therefore, $R_3 = 135$ kbits/s.

b. R_4 can take any value smaller than 135 kbits/s.

c.

$$f_3 = 9 \times 3 \times f_1 \;\Rightarrow\; f_1 = 10 \text{ kHz}$$

Source 1 is sampled at f_1 implying that $2B_1 = f_1 \;\Rightarrow\; B_1 = 5$ kHz. Source 2 is sampled at $2f_1$ implying that $2B_2 = 2f_1 \;\Rightarrow\; B_2 = 10$ kHz.

Problem 12: (12 points: $(4,4,4)$**)**
Delta Modulation (DM) is applied on the sinusoidal signal $w(t)$. The accumulator's output is denoted by $z(t)$ as shown in the figure below:

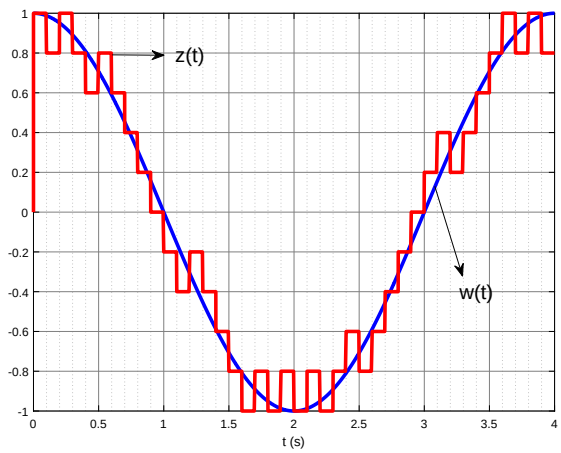

a. Find the values of the step size δ and the sampling frequency f_s.

b. Providing all necessary calculations, determine whether the system suffers from slope-overload noise or not.

c. Find the signal-to-noise ratio (in dB) assuming a receiver bandwidth of 1 Hz (*hint*: the PSD of granular noise is $\frac{\delta^2}{6f_s}$).

a. From the figure, $\delta = 0.2$ V and $T_s = 0.1$ s implying that $f_s = 10$ Hz.

b. The speed of the accumulator is given by $\frac{\delta}{T_s} = 2$. The maximum speed of $w(t)$ is $\max[|w'(t)|] = A\omega_0 = 1 \times (2\pi\frac{1}{4}) = 1.57$ (from the figure $w(t)$ is a sinusoidal signal of amplitude 1 and period 4 s). Since $\frac{\delta}{T_s} \geq \max[|w'(t)|]$, then the system does not suffer from slope-overload noise.

c.

$$P_s = \frac{A^2}{2} = \frac{1}{2} \quad \text{(W)}$$

$$P_n = \int_{-B}^{+B} \frac{\delta^2}{6f_s} \mathrm{d}f = \frac{\delta^2 B}{3f_s} = \frac{(0.2)^2 \times 1}{3 \times 10} = 1.333 \times 10^{-3} \quad \text{(W)}$$

$$\frac{P_s}{P_n} = 375 \quad \Rightarrow \quad \left.\frac{S}{N}\right)_{\text{dB}} = 10\log_{10}(375) = 25.75 \quad \text{(dB)}$$