Communication Systems Lecture-11: Time Division Multiplexing

Chadi Abou-Rjeily

Department of Electrical and Computer Engineering
Lebanese American University
chadi.abourjeily@lau.edu.lb

October 29, 2024

TDM (1)

Time Division Multiplexing (TDM): is the time interleaving of samples from several sources so that the information from these sources can be transmitted serially over a single communication channel.

TDM (2)

- The next figure shows the TDM of 3 sources:

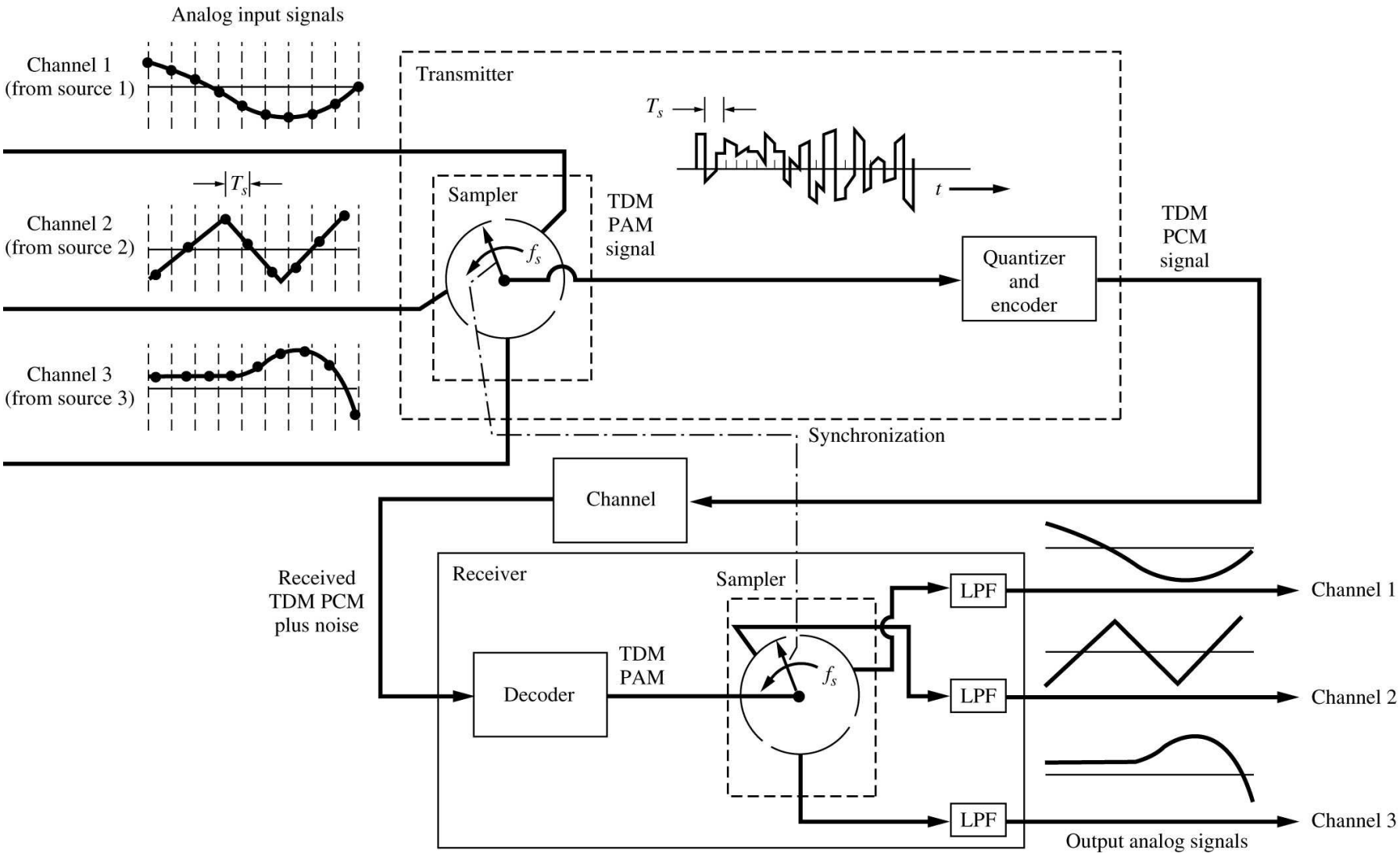

TDM (3)

- Consider the TDM of N_c sources.
- Denote by f_s the frequency of rotation of the commutator. f_s must satisfy the Nyquist rate for the analog source with the largest bandwidth:

$$f_s \geq 2 \max_{i=1 \ \ldots \ N_c} B_i$$

  where B_i is the bandwidth of the i-th source.
- The pulse width of the TDM PAM signal is $\frac{T_s}{N_c}$.
- The pulse width of the TDM PCM signal is $\frac{T_s}{N_c n}$ where n is the number of bits in a PCM codeword.
- At the receiver, the decommutator must be synchronized with the incoming waveform so that samples from the i-th source will appear at the output of the i-th channel for $i = 1, \ldots, N_c$.
- ISI will cause PCM samples from one channel to appear at the output of another channel.

TDM (4)

- Consider the case where the bandwidths of the different sources are markedly different.
- Instead of using a very fast commutator whose sampling rate is determined by the source having the largest bandwidth, the larger bandwidth sources may be connected to several switch positions of the sampler.
- In this case, large bandwidth sources are sampled more often than sources having smaller bandwidths.
- This relaxes the constraint on the sampling frequency f_s.

TDM (5)

Example on the design of a Time Division Multiplexer:

- Design a TDM system that accommodates 11 sources having the following specifications:
  - Source 1: Analog, 2-kHz bandwidth.
  - Source 2: Analog, 4-kHz bandwidth.
  - Source 3: Analog, 2-kHz bandwidth.
  - Sources 4-11: Digital, synchronous at 7.2-kbits/s.
- The design is given in the next figure. Note that the design is not unique.

TDM (6)

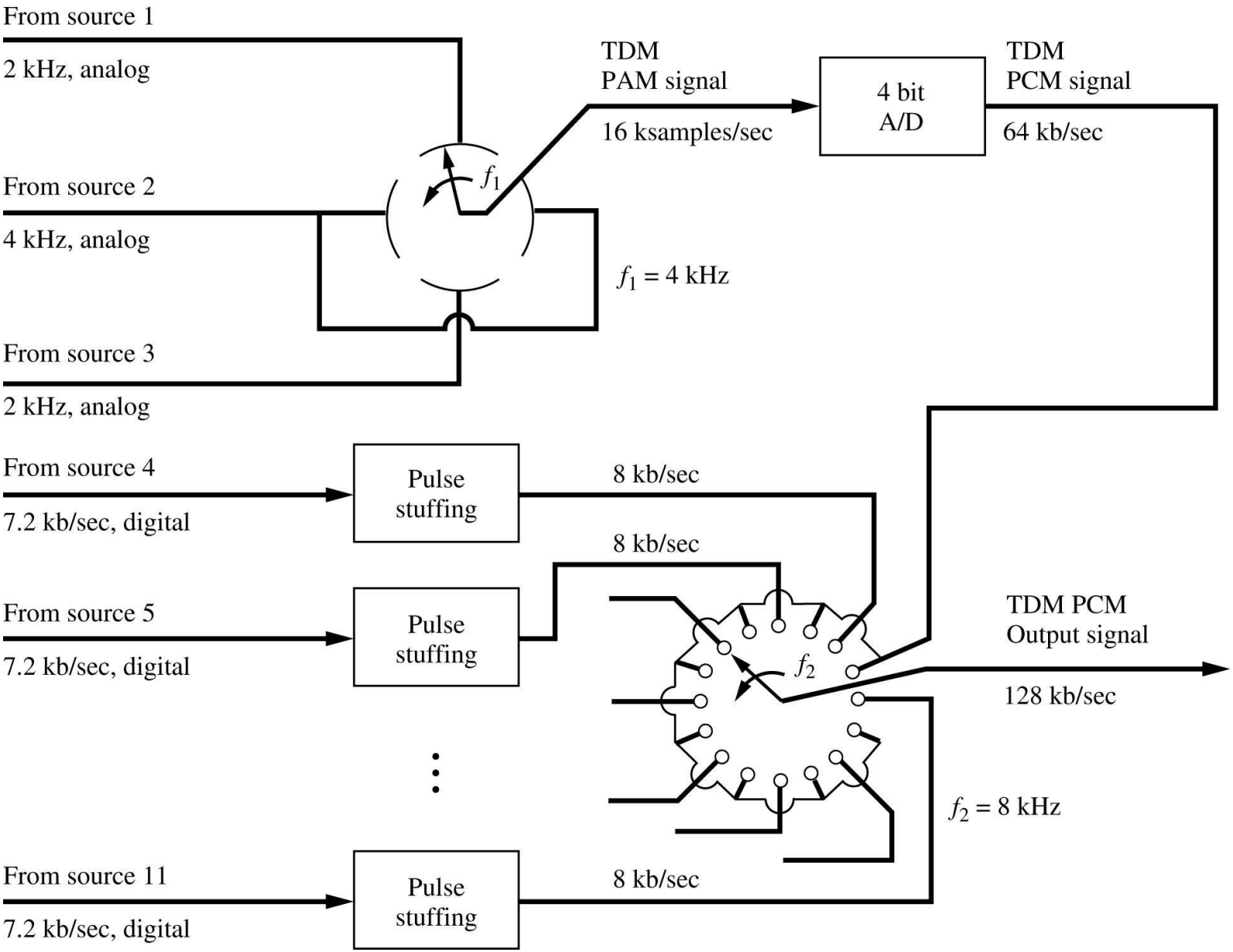
From source 1
2 kHz, analog
From source 2
4 kHz, analog
From source 3
2 kHz, analog
From source 4
7.2 kb/sec, digital
From source 5
7.2 kb/sec, digital
From source 11
7.2 kb/sec, digital
f_1
f_1 = 4 kHz
TDM
PAM signal
16 ksamples/sec
4 bit
A/D
TDM
PCM signal
64 kb/sec
Pulse
stuffing
Pulse
stuffing
Pulse
stuffing
8 kb/sec
8 kb/sec
8 kb/sec
f_2
f_2 = 8 kHz
TDM PCM
Output signal
128 kb/sec

TDM (7)

- To satisfy the Nyquist rate, the analog sources must be sampled at 4 kHz, 8 kHz and 4 kHz respectively. This can be accomplished by rotating the first commutator at $f_1 = 4$ kHz and by sampling source 2 twice per rotation.
- The pulse width of the TDM PAM signal at the output of the first commutator is equal to $\frac{1}{4f_1}$. This produces a $4f_1 = 16$ ksamples/s TDM PAM signal on the output of the first commutator.
- Assume that each sample is converted to a $n = 4$ bit PCM codeword. The pulse width of the TDM PCM signal is equal to $\frac{1}{4f_1 n}$ resulting in a data rate of $4f_1 n = 64$ kbits/s at the output of the A/D converter.

TDM (8)

- The digital data at the output of the A/D converter may be merged with the data from the digital sources using a second commutator rotating at $f_2 = 8$ kHz.
- The 64 kbits/s signal is connected to 8 (out of the 16) terminals of the commutator.
- Each one of the sources 4-11 is connected to one terminal of the second commutator. Since the digital sources are supplying 7.2 kbits/s data streams, pulse stuffing is used to raise the rate of each source to 8 kbits/s.
- The bit rate at the output of the multiplexer is $16 \times 8 = 128$ kbits/s.

Frame Synchronization (1)

- Frame synchronization can be provided to the receiver demultiplexer either by:
  - Transmitting a frame sync signal over a separate channel. This solution is trivial and not economical.
  - Providing frame sync in the TDM signal itself. In what follows, we consider this solution.
- Frame sync may be multiplexed along with the information words. A unique K bit sync word is transmitted at the beginning of each frame that contains the information from N sources.

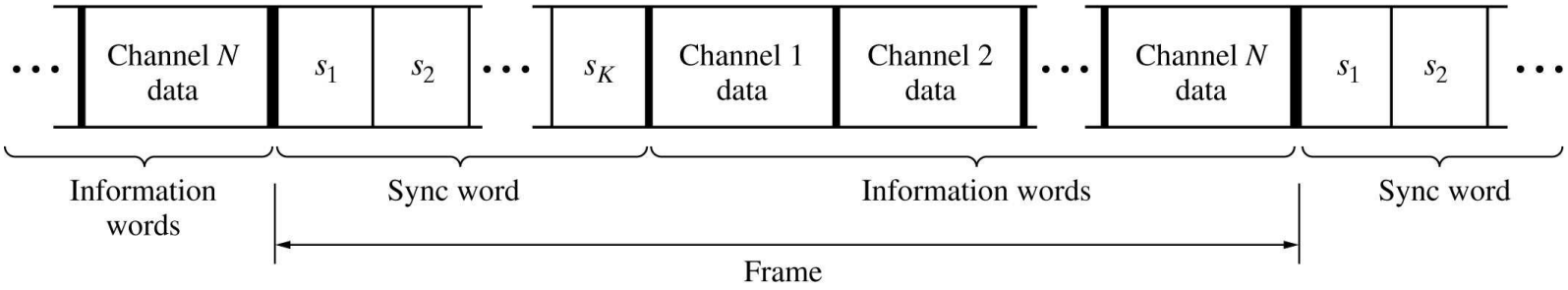

Frame Synchronization (2)

- At the receiver side, a frame synchronizer circuit is used. It cross-correlates the TDM signal with the expected unique sync word $\mathbf{s} = (s_1, \ldots, s_K)$.

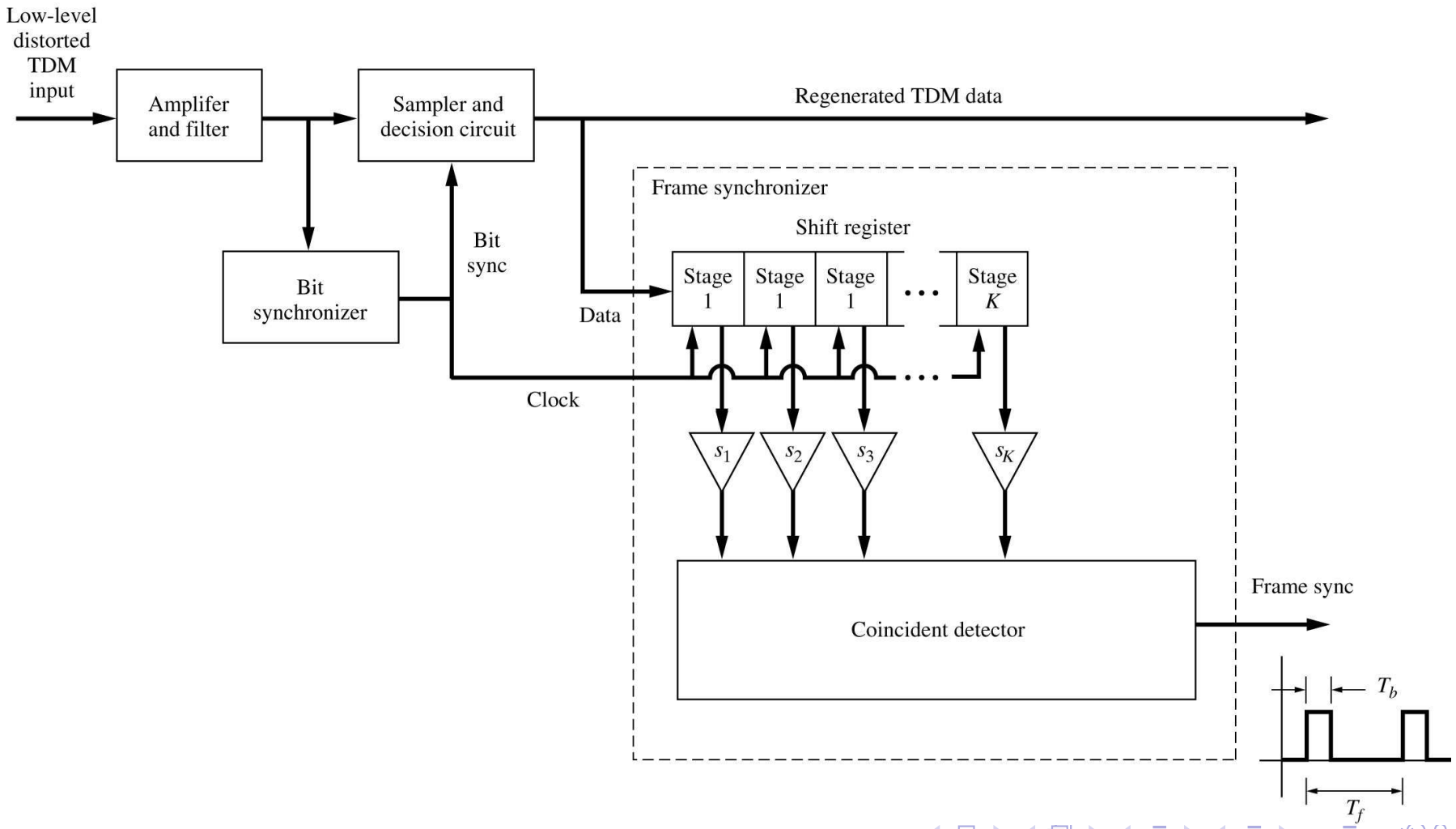

Frame Synchronization (3)

- The s_j's within the triangles below the shift registers denote the presence or absence of an inverter:
  - If $s_j = 0$ then there is an inverter. Otherwise, there is no inverter.
- The coincident detector is a K-input AND gate.

The frame sync signal is recovered because:

- If the unique sync word is present in the shift register, all the inputs of the coincident detector will be equal to 1. Consequently, the output of the detector is equal to 1. This binary 1 will result in a high voltage level for a duration of T_b seconds.
- If the sync word is not present in the shift register, at least one input of the coincident detector is equal to 0 resulting in a zero-level output.

Frame Synchronization (4)

- A false sync occurs if K successive information bits happen to be equal to the sync word. For equiprobable TDM data, this can happen with probability:

$$P_f = \left(\frac{1}{2}\right)^K = 2^{-K}$$

- In frame sync design, this equation is used to determine the length K of the sync word so that the false sync probability will not exceed a certain tolerated value.
  - For example, if $P_f = 4 \times 10^{-5}$ is the allowed probability of false sync, then a $K = 15$-bit sync word is required.