**QUESTION 1: CALCULATED NUMERIC**

10 out of 10 points

If the Laplace transform of the signal $\mathrm{rect}\left(\frac{t}{5}-\frac{1}{2}\right)$ can be written as $\frac{1-e^{-ks}}{s}$, what is the value of the constant k?

Given Answer: 5

Correct Answer: 5

Answer range +/- 0 (5 - 5 )

**QUESTION 2: MULTIPLE CHOICE**

10 out of 10 points

Consider the signal $x(t)=3\,\mathrm{tri}\left(\frac{t-2}{2}\right)$. The Laplace transform of $\frac{d^2x(t)}{dt^2}$ can be written as $f(s)-g(s)e^{-2s}+h(s)e^{-4s}$ where f(s), g(s) and h(s) are polynomial functions of 1/s.

Which one of the below options corresponds to h(s)?

Given Answer: 1.5

Correct Answer: 1.5

**QUESTION 3: TRUE/FALSE**

5 out of 5 points

A system whose impulse response is given by $h(t)=\left[e^{-t}+t^2e^{-4t}\right]u(t)$ is stable.

Given Answer: True

Correct Answer: True

**QUESTION 4: MULTIPLE CHOICE**

10 out of 10 points

The inverse Laplace transform of the function $X(s) = \dfrac{s}{s^2 + 6s + 13}$ can be written as $x(t) = [\cos(\omega_0 t) - k\sin(\omega_0 t)]e^{-\alpha t}u(t)$. Which row of the below table contains the correct values of the constants k, $\omega_0$ and α?

| Row # | k | $\omega_0$ | α |
|---|---|---|---|
| Row 1 | 2/3 | 3 | 2 |
| Row 2 | 3/2 | 3 | 2 |
| Row 3 | 1/2 | 4 | 2 |
| Row 4 | 2 | 4 | 2 |
| Row 5 | 3/2 | 2 | 3 |
| Row 6 | 2/3 | 2 | 3 |
| Row 7 | 1 | 3 | 3 |
| Row 8 | 2 | 3 | 3 |
| Row 9 | 2 | 2 | 4 |
| Row 10 | 1/2 | 2 | 4 |
| Row 11 | 4/3 | 3 | 4 |
| Row 12 | 3/4 | 3 | 4 |

Given Answer: Row 5

Correct Answer: Row 5

**QUESTION 5: MULTIPLE CHOICE**

10 out of 10 points

The inverse Laplace transform of the function $X(s) = \dfrac{s+3}{(s+1)(s+2)^2}$ can be written as $x(t) = \left[ae^{-t} + be^{-2t} + cte^{-2t}\right]u(t)$. Which row of the below table contains the correct values of the constants a, b and c?

| Row # | a | b | c |
|---|---|---|---|
| Row 1 | 1 | -1 | -1 |
| Row 2 | -1 | 1 | -1 |
| Row 3 | 2 | -2 | -1 |
| Row 4 | -2 | 2 | -1 |
| Row 5 | 1 | -1 | 2 |
| Row 6 | -1 | 1 | 2 |
| Row 7 | 2 | -2 | 2 |
| Row 8 | -2 | 2 | 2 |
| Row 9 | 2 | -2 | 4 |
| Row 10 | -2 | 2 | 4 |
| Row 11 | 3 | -3 | 4 |
| Row 12 | -3 | 3 | 4 |

Given Answer: Row 3

Correct Answer: Row 3

**QUESTION 6: MULTIPLE CHOICE**

10 out of 10 points

Consider the following differential equation:

$$3\frac{dx(t)}{dt} + 2x(t) = 4u(t)$$

subject to the initial condition $x(0^-)=5$.

If the solution of the above differential equation can be written as $x(t)=[a+be^{-ct}]u(t)$, which row of the below table contains the correct values of the constant a, b and c?

| Row # | a | b | c |
|---|---|---|---|
| Row 1 | 2 | 3 | 2/3 |
| Row 2 | 2 | -3 | 2/3 |
| Row 3 | 4 | 1 | 2/3 |
| Row 4 | 4 | -1 | 2/3 |
| Row 5 | 2 | 4 | 2/3 |
| Row 6 | 2 | -4 | 2/3 |
| Row 7 | 2 | 3 | 2 |
| Row 8 | 2 | -3 | 2 |
| Row 9 | 4 | 1 | 2 |
| Row 10 | 4 | -1 | 2 |
| Row 11 | 2 | 4 | 2 |
| Row 12 | 2 | -4 | 2 |

Given Answer: Row 1

Correct Answer: Row 1

**QUESTION 7: CALCULATED NUMERIC**

10 out of 10 points

The signal $x(t)=e^{-2t}u(t)$ is applied to the input of a system whose transfer function is given by $H(s)=\dfrac{s+4}{s(s^2+6s+2)}$. Find the final value of the response y(t).

Given Answer: 1

Correct Answer: 1

Answer range +/- 0 (1 - 1 )

**QUESTION 8: MULTIPLE CHOICE**

10 out of 10 points

Consider the system shown below:

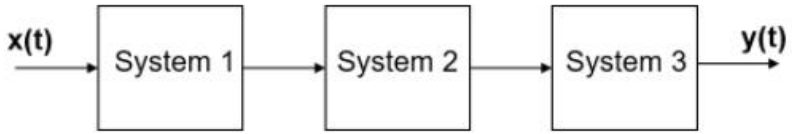


- System 1 is an integrator.
- System 2 has a transfer function of $(s^2+2)/s^2$.
- System 3 has an impulse response of $t \times e^{-3t}u(t)$.

Which row of the below table contains the correct differential equation that relates the output y(t) to the input x(t)? [$x^{(n)}(t)$ stands for the n-th derivative with respect to time]

| Row # | Differential Equation |
|---|---|
| Row 1 | $y^{(3)}(t)+3y^{(2)}(t)+9y^{(1)}(t)=x^{(2)}(t)+2x(t)$ |
| Row 2 | $y^{(3)}(t)+3y^{(2)}(t)+9y^{(1)}(t)=x^{(1)}(t)+2x(t)$ |
| Row 3 | $y^{(4)}(t)+3y^{(3)}(t)+9y^{(2)}(t)=x^{(2)}(t)+2x(t)$ |
| Row 4 | $y^{(4)}(t)+3y^{(3)}(t)+9y^{(2)}(t)=x^{(1)}(t)+2x(t)$ |
| Row 5 | $y^{(3)}(t)+3y^{(2)}(t)+6y^{(1)}(t)=x^{(2)}(t)+4x(t)$ |
| Row 6 | $y^{(3)}(t)+3y^{(2)}(t)+6y^{(1)}(t)=x^{(1)}(t)+4x(t)$ |
| Row 7 | $y^{(4)}(t)+3y^{(3)}(t)+6y^{(2)}(t)=x^{(2)}(t)+4x(t)$ |
| Row 8 | $y^{(4)}(t)+3y^{(3)}(t)+6y^{(2)}(t)=x^{(1)}(t)+4x(t)$ |
| Row 9 | $y^{(3)}(t)+6y^{(2)}(t)+9y^{(1)}(t)=x^{(2)}(t)+2x(t)$ |
| Row 10 | $y^{(3)}(t)+6y^{(2)}(t)+9y^{(1)}(t)=x^{(1)}(t)+2x(t)$ |
| Row 11 | $y^{(4)}(t)+6y^{(3)}(t)+9y^{(2)}(t)=x^{(2)}(t)+2x(t)$ |
| Row 12 | $y^{(4)}(t)+6y^{(3)}(t)+9y^{(2)}(t)=x^{(1)}(t)+2x(t)$ |

Given Answer: Row 8

Correct Answer: Row 11

**QUESTION 9: MULTIPLE CHOICE**

10 out of 10 points

Consider the signal x(t) such that:

$$\int_{0^-}^{t} x(\tau)\,d\tau = \frac{1+2e^{-s}+4e^{-3s}}{s^2}$$

Which one of the below figures corresponds to x(t)?

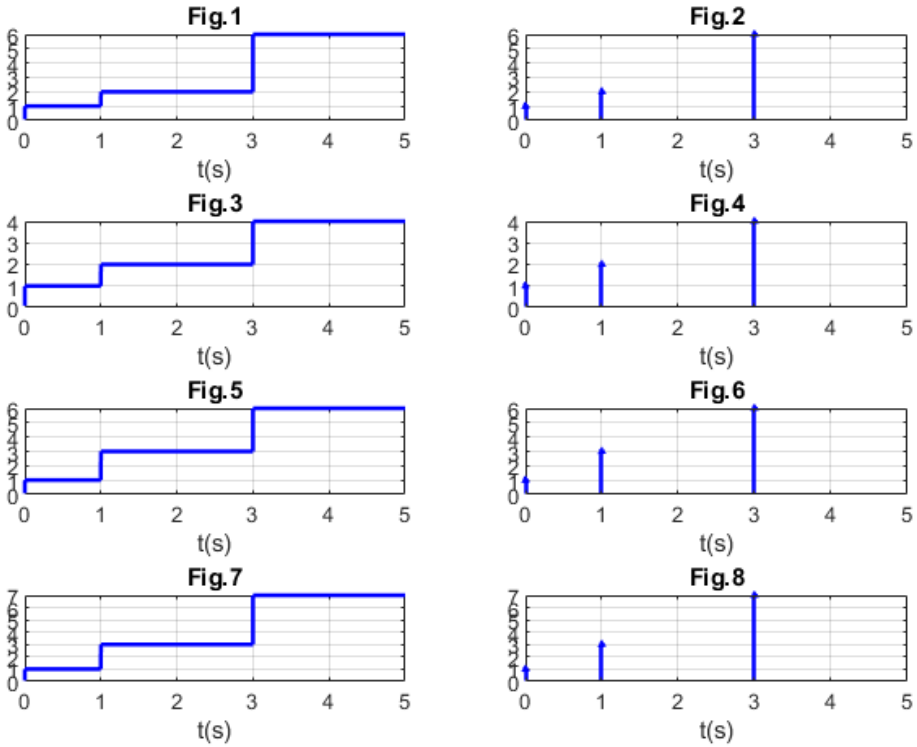


Given Answer: Fig. 7

Correct Answer: Fig. 7

**QUESTION 10: MULTIPLE CHOICE**

10 out of 10 points

Consider the system shown below where $H_1(s)=1/(s-a)$ and $H_2(s)=3$. Below which value of the real number a is the system stable?

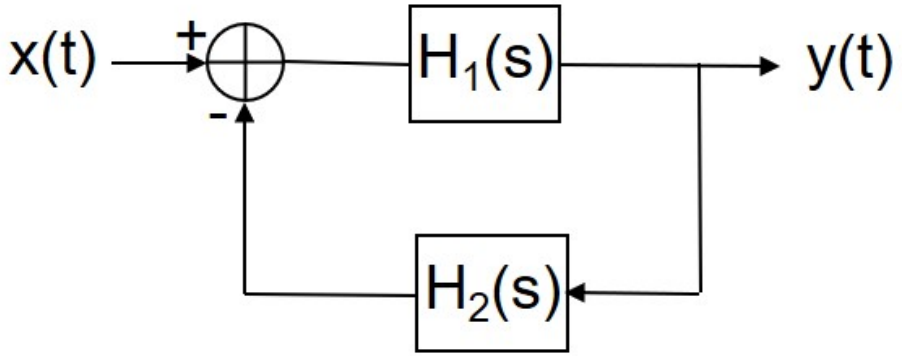


Given Answer: 3

Correct Answer: 3

**QUESTION 11: TRUE/FALSE**

5 out of 5 points

A system whose transfer function is given by $H(s)=\dfrac{1}{s^2+3}$ is stable.

Given Answer: False

Correct Answer: False