Signals and Systems

Grade Test: Quiz 6

Test Information

QUESTION 1: MULTIPLE CHOICE

5 **out of 5 points**

What is the type of the filter whose magnitude of the frequency-response is shown below?

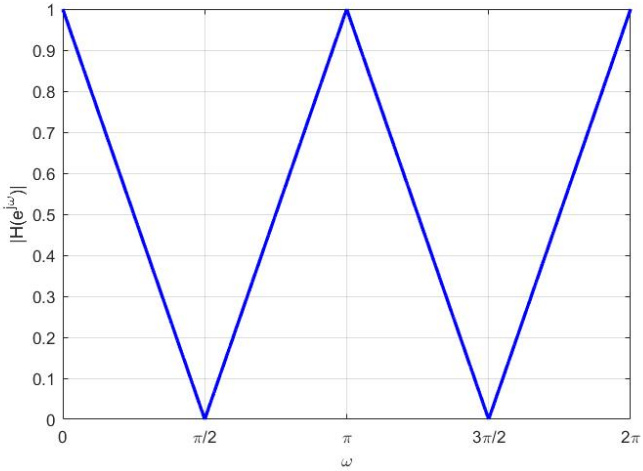

Given Answer: Band-reject filter.

Correct Answer: Band-reject filter.

QUESTION 2: CALCULATED NUMERIC | 10 **out of 10 points**

Consider the sequences x[n]=3u[n] and y[n]=4^nu[n]. Let z[n]=x[n]*y[n]. What is the value of z[3]?

Given Answer: 255

Correct Answer: 255

Answer range +/- 0 (255 - 255)

QUESTION 3: MULTIPLE CHOICE | 10 **out of 10 points**

Consider the LTI DT system that is described by the following difference equation:

$$y[n-1] = -\frac{5}{2}y[n-2] - y[n-3] + \frac{1}{2}x[n] + 2x[n-3].$$

What are the system characteristics?

Given Answer: Not Causal and Not Stable

Correct Answer: Not Causal and Not Stable

QUESTION 4: MULTIPLE CHOICE | 10 **out of 10 points**

Consider the DT sequence shown in the figure below:

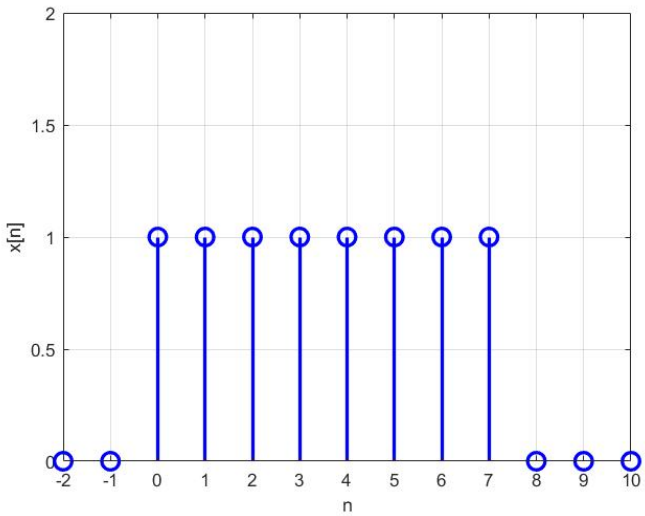

What is the z-transform of this sequence?

Given Answer: $\frac{z^8 - 1}{z^8 - z^7}$

Correct Answer: $\frac{z^8 - 1}{z^8 - z^7}$

QUESTION 5: CALCULATED NUMERIC 5 **out of 5 points**

Consider a LTI DT system with the following frequency response:

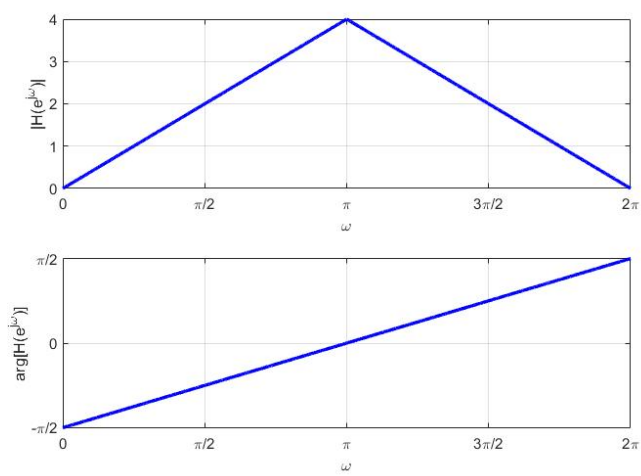

If the input signal is given by $x[n] = 2\cos\left(\frac{\pi}{2}n + \frac{\pi}{8}\right)u[n]$ and

the output signal is given by $y[n] = A\cos\left(\frac{\pi}{2}n - B\frac{\pi}{8}\right)u[n]$,

what is the value of the constant B?

Given Answer: 1

Correct Answer: 1

Answer range +/- 0 (1 - 1)

QUESTION 6: MULTIPLE CHOICE | 10 | **out of 10 points**

Consider the DT system whose block diagram is shown below:

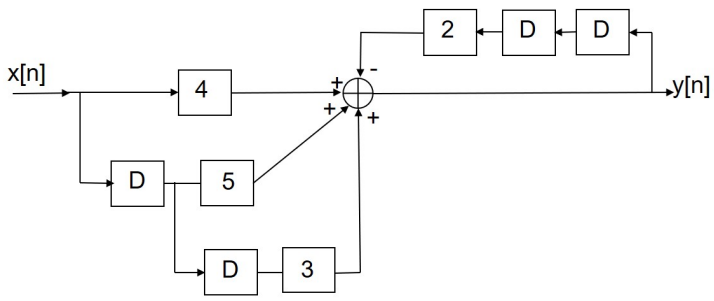

What is the transfer function of the system?

Given Answer: $H(z) = \frac{4z^2 + 5z + 3}{z^2 + 2}$

Correct Answer: $H(z) = \frac{4z^2 + 5z + 3}{z^2 + 2}$

QUESTION 7: MULTIPLE CHOICE | 10 | **out of 10 points**

Consider the DT sequences given by x[n]={3,-2,-1,3,2} and y[n]={-2,3,-2,-3,3}. Let z[n]=x[n]*y[n]. What is the value of z[2]?

Given Answer: -10

Correct Answer: -10

QUESTION 8: TRUE/FALSE | 5 | **out of 5 points**

u[n]+u[n-2]=δ[n]+δ[n-1]+δ[n-2]+2u[n-2]

Given Answer: False

Correct Answer: False

QUESTION 9: CALCULATED NUMERIC | 5 | **out of 5 points**

Consider the sequence given by:

$x[n] = 2\delta[n-3] + 6\delta[n-4] - 7\delta[n-5] + (-3+5^n)u[n-6] + (-7+2^n)u[n-1]$

.

What is the value of x[3]?

Given Answer: 3

Correct Answer: 3

Answer range +/- 0 (3 - 3)

QUESTION 10: CALCULATED FORMULA | 10 | **out of 10 points**

Consider a LTI DT system whose transfer function can be written as:

$$H(z) = \frac{z^{-1} + 3z^{-a} + 2z^{-b}}{1 + 5z^{-c} + 4z^{-d}}$$

Find the number of shift-registers (delay blocks of order 1) needed to implement this system if a=2, b=7, c=4 and d=11.

Given Answer: 18

Correct Answer: 18

QUESTION 11: MULTIPLE CHOICE | 10 | **out of 10 points**

What is the inverse z-transform of the function $\frac{z^2}{(z-0.3)(z-0.2)}$

?

Given Answer: $[3(0.3)^n - 2(0.2)^n]u[n]$

Correct Answer: $[3(0.3)^n - 2(0.2)^n]u[n]$

QUESTION 12: CALCULATED NUMERIC

10 **out of 10 points**

Consider the feedback system shown in the figure below:

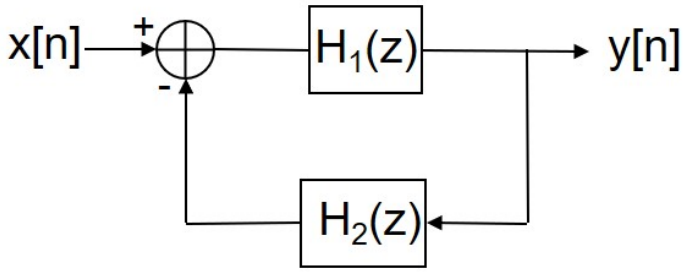

If $H_1(z)=10$ and $H_2(z)=z/(z-a)$, below which value of the positive number a will the system become stable?

Given Answer: 11

Correct Answer: 11

Answer range +/- 0 (11 - 11)

FEEDBACK AND NOTES FOR ATTEMPT

Feedback to Learner

Paragraph Arial 3 (12pt)

Mashups

Path: p Words:0

Grading Notes

Paragraph Arial 3 (12pt)

Mashups

Path: p Words:0