be sufficient for reliable locking of the synthesizer PLL when it is turned on. In this example, N can be reduced by a factor of about $\frac{1}{2}$ the IF frequency is chosen to be 450 kHz instead of 455 kHz. For example, for $f_{IF} = 450$ kHz and $f_c = 530$ kHz, we need $f_0 = 980$ kHz. This LO frequency is attained if $M = 100$ (for a step size of $f_{in} = 10$ kHz) and $N = 98$, compared with (see Table 4–6) $M = 200$ and $N = 197$, which was needed for the case when $f_{IF} = 455$ kHz.

PROBLEMS

4–1 Show that if $v(t) = \text{Re}\{g(t)e^{j\omega_c t}\}$, Eqs. (4–1b) and (4–1c) are correct, where $g(t) = x(t) + jy(t) = R(t)e^{j\theta(t)}$.

★ 4–2 A double-sideband suppressed carrier (DSB-SC) signal $s(t)$ with a carrier frequency of 3.8 MHz has a complex envelope $g(t) = A_c m(t)$. $A_c = 50$ V, and the modulation is a 1-kHz sinusoidal test tone described by $m(t) = 2\sin(2\pi 1{,}000t)$. Evaluate the voltage spectrum for this DSB-SC signal.

4–3 Assume that the DSB-SC voltage signal $s(t)$, as described in Prob. 4–2 appears across a 50-Ω resistive load.

(a) Compute the actual average power dissipated in the load.

(b) Compute the actual PEP.

4–4 A bandpass filter is shown in Fig. P4–4.

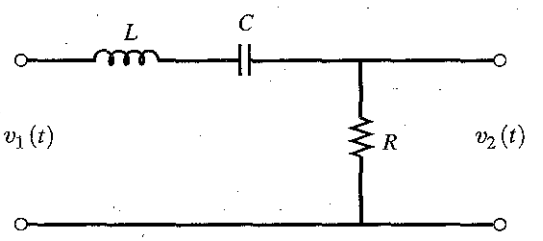

Figure P4–4

(a) Find the mathematical expression for the transfer function of this filter, $H(f) = V_2(f)/V_1(f)$, as a function of R, L, and C. Sketch the magnitude transfer function $|H(f)|$.

(b) Find the expression for the equivalent low-pass filter transfer function, and sketch the corresponding low-pass magnitude transfer function.

★ 4–5 Let the transfer function of an ideal bandpass filter be given by

$$H(f) = \begin{cases} 1, & |f + f_c| < B_T/2 \\ 1, & |f - f_c| < B_T/2 \\ 0, & f \text{ elsewhere} \end{cases}$$

where B_T is the absolute bandwidth of the filter.

(a) Sketch the magnitude transfer function $|H(f)|$.

(b) Find an expression for the waveform at the output, $v_2(t)$, if the input consists of the pulsed carrier

$$v_1(t) = A\Pi(t/T)\cos(\omega_c t)$$

(c) Sketch the output waveform $v_2(t)$ for the case when $B_T = 4/T$ and $f_c \gg B_T$.
(*Hint:* Use the complex-envelope technique, and express the answer as a function of the sine integral, defined by

$$\mathrm{Si}(u) = \int_0^u \frac{\sin \lambda}{\lambda}\, d\lambda$$

The sketch can be obtained by looking up values for the sine integral from published tables [Abramowitz and Stegun, 1964] or by numerically evaluating $\mathrm{Si}(u)$.)

4–6 Examine the distortion properties of an *RC* low-pass filter (shown in Fig. 2–15). Assume that the filter input consists of a bandpass signal that has a bandwidth of 1 kHz and a carrier frequency of 15 kHz. Let the time constant of the filter be $\tau_0 = RC = 10^{-5}$ s.

(a) Find the phase delay for the output carrier.
(b) Determine the group delay at the carrier frequency.
(c) Evaluate the group delay for frequencies around and within the frequency band of the signal. Plot this delay as a function of frequency.
(d) Using the results of (a) through (c), explain why the filter does or does not distort the bandpass signal.

★ 4–7 A bandpass filter as shown in Fig. P4–7 has the transfer function

$$H(s) = \frac{Ks}{s^2 + (\omega_0/Q)s + \omega_0^2}$$

where $Q = R\sqrt{C/L}$, the resonant frequency is $f_0 = 1/(2\pi\sqrt{LC})$, $\omega_0 = 2\pi f_0$, K is a constant, and values for R, L, and C are given in the figure. Assume that a bandpass signal with $f_c = 4$ kHz and a bandwidth of 200 Hz passes through the filter, where $f_0 = f_c$.

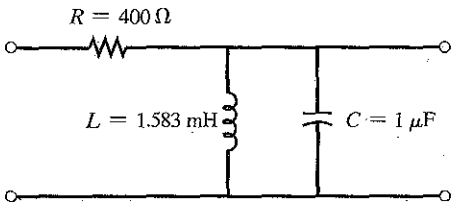

Figure P4–7

(a) Using Eq. (4–39), find the bandwidth of the filter.
(b) Plot the carrier delay as a function of f about f_0.
(c) Plot the group delay as a function of f about f_0.
(d) Explain why the filter does or does not distort the signal.

4–8 An FM signal is of the form

$$s(t) = \cos\left[\omega_c t + D_f \int_{-\infty}^{t} m(\sigma)\, d\sigma\right]$$

where $m(t)$ is the modulating signal and $\omega_c = 2\pi f_c$, in which f_c is the carrier frequency. Show that the functions $g(t)$, $x(t)$, $y(t)$, $R(t)$, and $\theta(t)$, as given for FM in Table 4–1, are correct.

★ 4–9 Let a modulated signal,

$$s(t) = 100 \sin(\omega_c + \omega_a)t + 500 \cos \omega_c t - 100 \sin(\omega_c - \omega_a)t$$

where the unmodulated carrier is $500 \cos \omega_c t$.

(a) Find the complex envelope for the modulated signal. What type of modulation is involved? What is the modulating signal?
(b) Find the quadrature modulation components $x(t)$ and $y(t)$ for this modulated signal.
(c) Find the magnitude and PM components $R(t)$ and $\theta(t)$ for this modulated signal.
(d) Find the total average power, where $s(t)$ is a voltage waveform that is applied across a 50-Ω load.

★ **4–10** Find the spectrum of the modulated signal given in Prob. 4–9 by two methods:
(a) By direct evaluation using the Fourier transform of $s(t)$.
(b) By the use of Eq. (4–12).

4–11 Given a pulse-modulated signal of the form

$$s(t) = e^{-at}\cos[(\omega_c + \Delta\omega)t]u(t)$$

where a, ω_c, and $\Delta\omega$ are positive constants and the carrier frequency, $\omega_c \gg \Delta\omega$,
(a) Find the complex envelope.
(b) Find the spectrum $S(f)$.
(c) Sketch the magnitude and phase spectra $|S(f)|$ and $\theta(f) = \angle S(f)$.

4–12 In a digital computer simulation of a bandpass filter, the complex envelope of the impulse response is used, where $h(t) = \mathrm{Re}[k(t)\ e^{j\omega_c t}]$, as shown in Fig. 4–3. The complex impulse response can be expressed in terms of quadrature components as $k(t) = 2h_x(t) + j2h_y(t)$, where $h_x(t) = \frac{1}{2}\mathrm{Re}[k(t)]$ and $h_y(t) = \frac{1}{2}\,\mathrm{Im}\,[k(t)]$. The complex envelopes of the input and output are denoted, respectively, by $g_1(t) = x_1(t) + jy_1(t)$ and $g_2(t) = x_2(t) + jy_2(t)$. The bandpass filter simulation can be carried out by using four *real baseband* filters (i.e., filters having real impulse responses), as shown in Fig. P4–12. Note that although there are four filters, there are only two different impulse responses: $h_x(t)$ and $h_y(t)$.
(a) Using Eq. (4–22), show that Fig. P4–12 is correct.

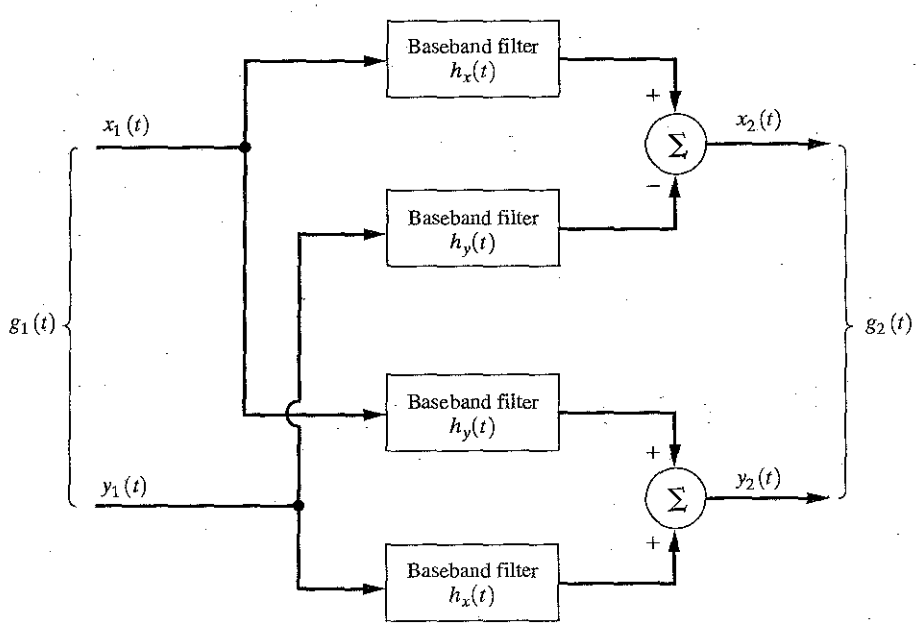

Figure P4–12

(b) Show that $h_y(t) \equiv 0$ (i.e., no filter is needed) if the bandpass filter has a transfer function with Hermitian symmetry about f_c,—that is, if $H(-\Delta f + f_c) = H^*(\Delta f + f_c)$, where $|\Delta f| < B_T/2$ and B_T is the bounded spectral bandwidth of the bandpass filter. This Hermitian symmetry implies that the magnitude frequency response of the bandpass filter is even about f_c and the phase response is odd about f_c.

4–13 Evaluate and sketch the magnitude transfer function for **(a)** Butterworth, **(b)** Chebyshev, and **(c)** Bessel low-pass filters. Assume that $f_b = 10$ Hz and $\varepsilon = 1$.

★ **4–14** Plot the amplitude response, the phase response, and the phase delay as a function of frequency for the following low-pass filters, where $B = 100$ Hz:

(a) Butterworth filter, second order:

$$H(f) = \frac{1}{1 + \sqrt{2}\,(jf/B) + (jf/B)^2}$$

(b) Butterworth filter, fourth order:

$$H(f) = \frac{1}{[1 + 0.765(jf/B) + (jf/B)^2][1 + 1.848(jf/B) + (jf/B)^2]}$$

Compare your results for the two filters.

4–15 Assume that the output-to-input characteristic of a bandpass amplifier is described by Eq. (4–42) and that the linearity of the amplifier is being evaluated by using a two-tone test.

(a) Find the frequencies of the fifth-order intermodulation products that fall within the amplifier bandpass.

(b) Evaluate the levels for the fifth-order intermodulation products in terms of A_1, A_2, and the K's.

4–16 An amplifier is tested for total harmonic distortion (THD) by using a single-tone test. The output is observed on a spectrum analyzer. It is found that the peak values of the three measured harmonics decrease according to an exponential recursion relation $V_{n+1} = V_n e^{-n}$, where $n = 1, 2, 3$. What is the THD?

★ **4–17** The nonlinear output–input characteristic of an amplifier is

$$v_{\text{out}}(t) = 5v_{\text{in}}(t) + 1.5v_{\text{in}}^2(t) + 1.5v_{\text{in}}^3(t)$$

Assume that the input signal consists of seven components:

$$v_{\text{in}}(t) = \frac{1}{2} + \frac{4}{\pi^2}\sum_{k=1}^{6}\frac{1}{(2k-1)^2}\cos[(2k-1)\pi t]$$

(a) Plot the output signal and compare it with the linear output component $5v_{\text{in}}(t)$.

(b) Take the FFT of the output $v_{\text{out}}(t)$, and compare it with the spectrum for the linear output component.

4–18 For a bandpass limiter circuit, show that the bandpass output is given by Eq. (4–55), where $K = (4/\pi)A_0$. A_0 denotes the voltage gain of the bandpass filter, and it is assumed that the gain is constant over the frequency range of the bandpass signal.

4–19 Discuss whether the Taylor series nonlinear model is applicable to the analysis of **(a)** soft limiters and **(b)** hard limiters.

★ **4–20** Assume that an audio sine-wave testing signal is passed through an audio hard limiter circuit. Evaluate the total harmonic distortion (THD) on the signal at the limiter output.

4–21 Using the mathematical definition of linearity given in Chapter 2, show that the analog switch multiplier of Fig. 4–10 is a linear device.

4–22 An audio signal with a bandwidth of 10 kHz is transmitted over an AM transmitter with a carrier frequency of 1.0 MHz. The AM signal is received on a superheterodyne receiver with an envelope detector. What is the constraint on the RC time constant for the envelope detector?

★ **4–23** Assume that an AM receiver with an envelope detector is tuned to an SSB-AM signal that has a modulation waveform given by $m(t)$. Find the mathematical expression for the audio signal that appears at the receiver output in terms of $m(t)$. Is the audio output distorted?

4–24 Evaluate the sensitivity of the zero-crossing FM detector shown in Fig. 4–18. Assume that the differential amplifier is described by $v_{\text{out}}(t) = A[v_2(t) - v_3(t)]$, where A is the voltage gain of the amplifier. In particular, show that $v_{\text{out}} = Kf_d$, where $f_d = f_i - f_c$, and find the value of the sensitivity constant K in terms of A, R, and C. Assume that the peak levels of the monostable outputs Q and $\bar{Q}$ are 4 V (TTL circuit levels).

4–25 **(a)** Using Eq. (4–100), show that the linearized block diagram model for a PLL is given by Fig. 4–22.

(b) Show that Eq. (4–101) describes the linear PLL model as given in Fig. 4–22.

★ **4–26** Using the Laplace transform and the final value theorem, find an expression for the steady-state phase error, $\lim_{t \to \infty} \theta_e(t)$, for a PLL as described by Eq. (4–100). [*Hint:* The final value theorem is $\lim_{t \to \infty} f(t) = \lim_{s \to 0} sF(s)$.]

4–27 Assume that the loop filter of a PLL is a low-pass filter, as shown in Fig. P4–27.

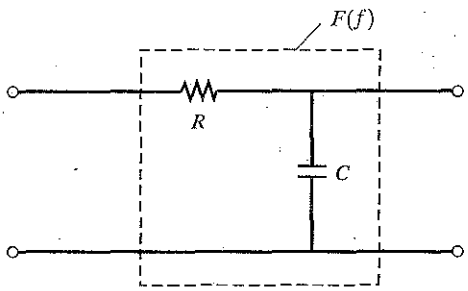

Figure P4–27

(a) Evaluate the closed-loop transfer function $H(f) = \dfrac{\Theta_0(f)}{\Theta_i(f)}$ for a linearized PLL.

(b) Sketch the Bode plot $[|H(f)|]_{\text{dB}} \triangleq 20 \log |H(f)|$ for this PLL.

★ **4–28** Assume that the phase noise characteristic of a PLL is being examined. The internal phase noise of the VCO is modeled by the input $\theta_n(t)$, as shown in Fig. P4–28.

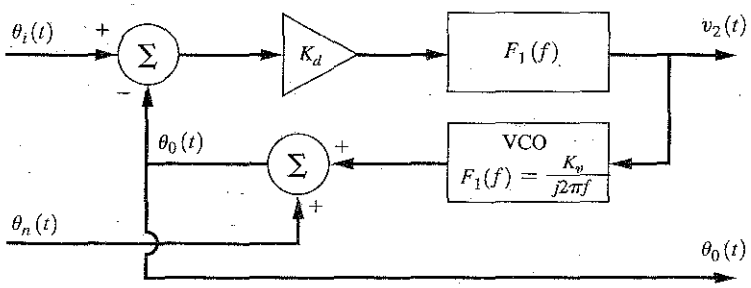

Figure P4–28

(a) Find an expression for the closed-loop transfer function $\Theta_0(f)/\Theta_n(f)$, where $\theta_i(t) = 0$.
(b) If $F_1(f)$ is the low-pass filter given in Fig. P4–27, sketch the Bode plot $[|\Theta_0(f)/\Theta_n(f)|]_{dB}$ for the phase noise transfer function.

4–29 The input to a PLL is $v_{in}(t) = A \sin(\omega_0 t + \theta_i)$. The LPF has a transfer function $F(s) = (s + a)/s$.
(a) What is the steady-state phase error?
(b) What is the maximum hold-in range for the noiseless case?

★ 4–30 (a) Refer to Fig. 4–25 for a PLL frequency synthesizer. Design a synthesizer that will cover a range of 144 to 148 MHz in 5-kHz steps, starting at 144.000 MHz. Assume that the frequency standard operates at 5 MHz, that the M divider is fixed at some value, and that the N divider is programmable so that the synthesizer will cover the desired range. Sketch a diagram of your design, indicating the frequencies present at various points of the diagram.
(b) Modify your design so that the output signal can be frequency modulated with an audio-frequency input such that the peak deviation of the RF output is 5 kHz.

4–31 Assume that an SSB-AM transmitter is to be realized using the AM–PM generation technique, as shown in Fig. 4–27.
(a) Sketch a block diagram for the baseband signal-processing circuit.
(b) Find expressions for $R(t)$, $\theta(t)$, and $v(t)$ when the modulation is $m(t) = A_1 \cos \omega_1 t + A_2 \cos \omega_2 t$.

4–32 Rework Prob. 4–31 for the case of generating an FM signal.

4–33 Assume that an SSB-AM transmitter is to be realized using the quadrature generation technique, as shown in Fig. 4–28.
(a) Sketch a block diagram for the baseband signal-processing circuit.
(b) Find expressions for $x(t)$, $y(t)$, and $v(t)$ when the modulation is $m(t) = A_1 \cos \omega_1 t + A_2 \cos \omega_2 t$.

4–34 Rework Prob. 4–33 for the case of generating an FM signal.

★ 4–35 An FM radio is tuned to receive an FM broadcasting station of frequency 96.9 MHz. The radio is of the superheterodyne type with the LO operating on the high side of the 96.9-MHz input and using a 10.7-MHz IF amplifier.
(a) Determine the LO frequency.
(b) If the FM signal has a bandwidth of 180 kHz, give the requirements for the RF and IF filters.
(c) Calculate the frequency of the image response.

4–36 A dual-mode cellular phone is designed to operate with either analog cellular phone service in the 900-MHz band or digital PCS in the 1,900-MHz band. The phone uses a superheterodyne receiver with a 500-MHz IF for both modes.
(a) Calculate the LO frequency and the image frequency for high-side injection when the phone receives an 880-MHz analog signal.
(b) Calculate the LO frequency and the image frequency for low-side injection when the phone receives a 1,960-MHz digital PCS signal.
(c) Discuss the advantage of using a 500-MHz IF for this dual-mode phone.
(*Note*: Cellular and PCS systems are described in Chapter 8.)

4–37 A superheterodyne receiver is tuned to a station at 20 MHz. The local oscillator frequency is 80 MHz and the IF is 100 MHz.
(a) What is the image frequency?
(b) If the LO has appreciable second-harmonic content, what two additional frequencies are received?

(c) If the RF amplifier contains a single-tuned parallel resonant circuit with $Q = 50$ tuned to 20 MHz, what will be the image attentuation in dB?

4–38 An SSB-AM receiver is tuned to receive a 7.225-MHz lower SSB (LSSB) signal. The LSSB signal is modulated by an audio signal that has a 3-kHz bandwidth. Assume that the receiver uses a superheterodyne circuit with an SSB IF filter. The IF amplifier is centered on 3.395 MHz. The LO frequency is on the high (frequency) side of the input LSSB signal.

(a) Draw a block diagram of the single-conversion superheterodyne receiver, indicating frequencies present and typical spectra of the signals at various points within the receiver.

(b) Determine the required RF and IF filter specifications, assuming that the image frequency is to be attenuated by 40 dB.

4–39 (a) Draw a block diagram of a superheterodyne FM receiver that is designed to receive FM signals over a band from 144 to 148 MHz. Assume that the receiver is of the dual-conversion type (i.e., a mixer and an IF amplifier, followed by another mixer and a second IF amplifier), where the first IF is 10.7 MHz and the second is 455 kHz. Indicate the frequencies of the signals at different points on the diagram, and, in particular, show the frequencies involved when a signal at 146.82 MHz is being received.

(b) Replace the first oscillator by a frequency synthesizer such that the receiver can be tuned in 5-kHz steps from 144.000 to 148.000 MHz. Show the diagram of your synthesizer design and the frequencies involved.

★ **4–40** An AM broadcast-band radio is tuned to receive a 1,080-kHz AM signal and uses high-side LO injection. The IF is 455 kHz.

(a) Sketch the frequency response for the RF and IF filters.

(b) What is the image frequency?

4–41 Commercial AM broadcast stations operate in the 540- to 1,700-kHz band, with a transmission bandwidth limited to 10 kHz.

(a) What are the maximum number of stations that can be accommodated?

(b) If stations are not assigned to adjacent channels (in order to reduce interference on receivers that have poor IF characteristics), how many stations can be accommodated?

(c) For 455-kHz IF receivers, what is the band of image frequencies for the AM receiver that uses a down-converter with high-side injection?