For the case of random data, the PSD for the complex envelope is given by Eq. (5–90) and shown in Fig. 5–27 for the modulation index of $h = 0.7$. Using Eq. (5–2b), we find that the PSD for the FSK signal is the translation of the PSD for the complex envelope to the carrier frequency of 7087.875 kHz.

PROBLEMS

★ **5–1** An AM broadcast transmitter is tested by feeding the RF output into a 50-Ω (dummy) load. Tone modulation is applied. The carrier frequency is 850 kHz and the FCC licensed power output is 5,000 W. The sinusoidal tone of 1,000 Hz is set for 90% modulation.

(a) Evaluate the FCC power in dBk (dB above 1 kW) units.

(b) Write an equation for the voltage that appears across the 50-Ω load, giving numerical values for all constants.

(c) Sketch the spectrum of this voltage as it would appear on a calibrated spectrum analyzer.

(d) What is the average power that is being dissipated in the dummy load?

(e) What is the peak envelope power?

5–2 An AM transmitter is modulated with an audio testing signal given by $m(t) = 0.2 \sin \omega_1 t + 0.5 \cos \omega_2 t$, where $f_1 = 500$ Hz, $f_2 = 500\sqrt{2}$ Hz, and $A_c = 100$. Assume that the AM signal is fed into a 50-Ω load.

(a) Sketch the AM waveform.

(b) What is the modulation percentage?

(c) Evaluate and sketch the spectrum of the AM waveform.

5–3 For the AM signal given in Prob. 5–2,

(a) Evaluate the average power of the AM signal.

(b) Evaluate the PEP of the AM signal.

★ **5–4** Assume that an AM transmitter is modulated with a video testing signal given by $m(t) = -0.2 + 0.6 \sin \omega_1 t$, where $f_1 = 3.57$ MHz. Let $A_c = 100$.

(a) Sketch the AM waveform.

(b) What are the percentages of positive and negative modulation?

(c) Evaluate and sketch the spectrum of the AM waveform about f_c.

5–5 A 50,000-W AM broadcast transmitter is being evaluated by means of a two-tone test. The transmitter is connected to a 50-Ω load, and $m(t) = A_1 \cos \omega_1 t + A_1 \cos 2\omega_1 t$, where $f_1 = 500$ Hz. Assume that a perfect AM signal is generated.

(a) Evaluate the complex envelope for the AM signal in terms of A_1 and ω_1.

(b) Determine the value of A_1 for 90% modulation.

(c) Find the values for the peak current and average current into the 50-Ω load for the 90% modulation case.

★ **5–6** An AM transmitter uses a two-quadrant multiplier so that the transmitted signal is described by Eq. (5–7). Assume that the transmitter is modulated by $m(t) = A_m \cos \omega_m t$, where A_m is adjusted so that 120% positive modulation is obtained. Evaluate the spectrum of this AM signal in terms of A_c, f_c, and f_m. Sketch your result.

★ **5–7** A DSB-SC signal is modulated by $m(t) = \cos \omega_1 t + 2 \cos 2\omega_1 t$, where $\omega_1 = 2\pi f_1$, $f_1 = 500$ Hz, and $A_c = 1$.

(a) Write an expression for the DSB-SC signal and sketch a picture of this waveform.

(b) Evaluate and sketch the spectrum for this DSB-SC signal.

(c) Find the value of the average (normalized) power.

(d) Find the value of the PEP (normalized).

5–8 Assume that transmitting circuitry restricts the modulated output signal to a certain peak value, say, A_p, because of power-supply voltages that are used and because of the peak voltage and current ratings of the components. If a DSB-SC signal with a peak value of A_p is generated by this circuit, show that the sideband power of this DSB-SC signal is four times the sideband power of a comparable AM signal having the same peak value A_p that could also be generated by this circuit.

5–9 A DSB-SC signal can be generated from two AM signals as shown in Fig. P5–9. Using mathematics to describe signals at each point on the figure, prove that the output is a DSB-SC signal.

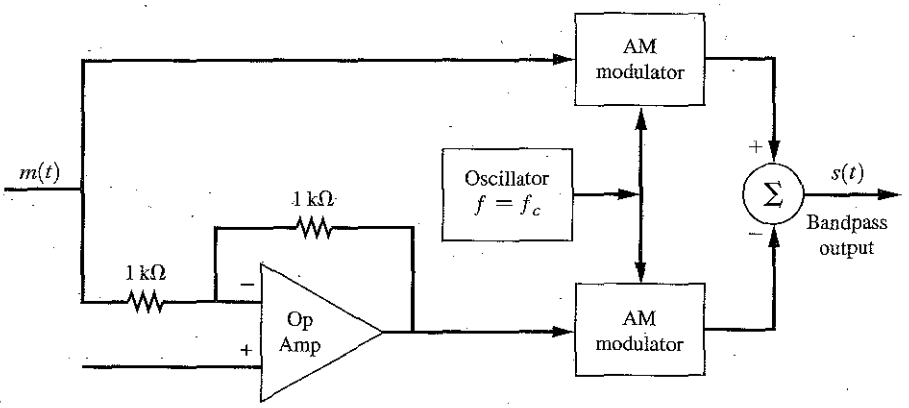

Figure P5–9

5–10 Show that the complex envelope $g(t) = m(t) - j\hat{m}(t)$ produces a lower SSB signal, provided that $m(t)$ is a real signal.

5–11 Show that the impulse response of a $-90°$ phase shift network (i.e., a Hilbert transformer) is $1/\pi t$. *Hint:*

$$H(f) = \lim_{\substack{\alpha \to 0 \\ \alpha > 0}} \begin{cases} -je^{-\alpha f}, & f > 0 \\ je^{\alpha f}, & f < 0 \end{cases}$$

★ **5–12** SSB signals can be generated by the phasing method shown in Fig. 5–5a, by the filter method, of Fig. 5–5b, or by the use of Weaver's method [Weaver, 1956], as shown in Fig. P5–12. For Weaver's method (Fig. P5–12), where B is the bandwidth of $m(t)$,

(a) Find a mathematical expression that describes the waveform out of each block on the block diagram.

(b) Show that $s(t)$ is an SSB signal.

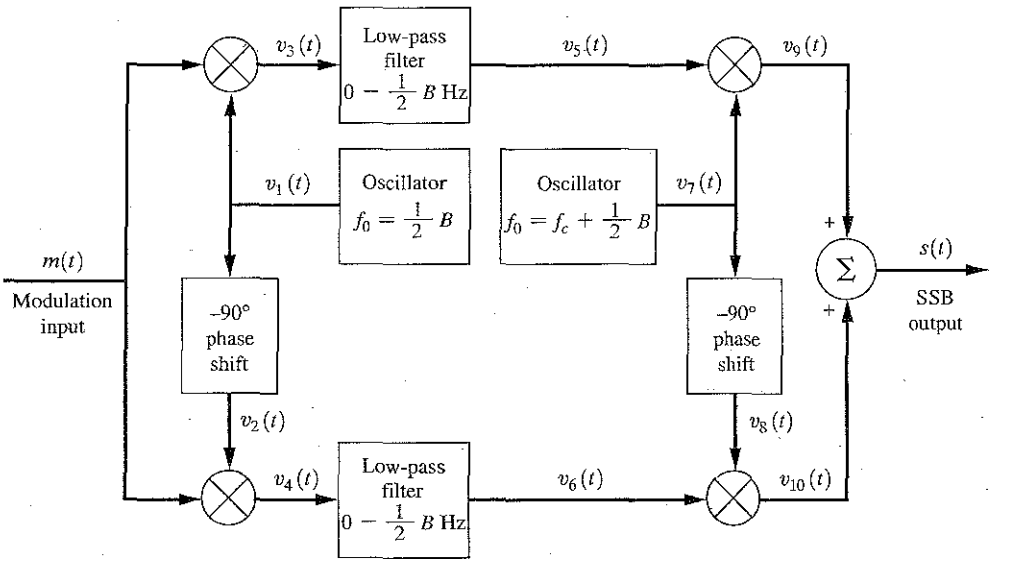

Figure P5–12 Weaver's method for generating SSB.

5–13 An SSB-AM transmitter is modulated with a sinusoid $m(t) = 5 \cos \omega_1 t$, where $\omega_1 = 2\pi f_1$, $f_1 = 500$ Hz, and $A_c = 1$.

(a) Evaluate $\hat{m}(t)$.

(b) Find the expression for a lower SSB signal.

(c) Find the RMS value of the SSB signal.

(d) Find the peak value of the SSB signal.

(e) Find the normalized average power of the SSB signal.

(f) Find the normalized PEP of the SSB signal.

★ **5–14** An SSB-AM transmitter is modulated by a rectangular pulse such that $m(t) = \Pi(t/T)$ and $A_c = 1$.

(a) Prove that

$$\hat{m}(t) = \frac{1}{\pi} \ln \left| \frac{2t + T}{2t - T} \right|$$

as given in Table A–7.

(b) Find an expression for the SSB-AM signal $s(t)$, and sketch $s(t)$.

(c) Find the peak value of $s(t)$.

5–15 For Prob. 5–14,

(a) Find the expression for the spectrum of a USSB-AM signal.

(b) Sketch the magnitude spectrum, $|S(f)|$.

★ **5–16** A USSB transmitter is modulated with the pulse

$$m(t) = \frac{\sin \pi a t}{\pi a t}$$

(a) Prove that

$$\hat{m}(t) = \frac{\sin^2[(\pi a/2)t]}{(\pi a/2)t}$$

(b) Plot the corresponding USSB signal waveform for the case of $A_c = 1$, $a = 2$, and $f_c = 20$ Hz.

5–17 A USSB-AM signal is modulated by a rectangular pulse train:

$$m(t) = \sum_{n=-\infty}^{\infty} \Pi[(t - nT_0)/T].$$

Here, $T_0 = 2T$.

(a) Find the expression for the spectrum of the SSB-AM signal.

(b) Sketch the magnitude spectrum, $|S(f)|$.

5–18 A phasing-type SSB-AM detector is shown in Fig. P5–18. This circuit is attached to the IF output of a conventional superheterodyne receiver to provide SSB reception.

(a) Determine whether the detector is sensitive to LSSB or USSB signals. How would the detector be changed to receive SSB signals with the opposite type of sidebands?

(b) Assume that the signal at point A is a USSB signal with $f_c = 455$ kHz. Find the mathematical expressions for the signals at points B through I.

(c) Repeat part (b) for the case of an LSSB-AM signal at point A.

(d) Discuss the IF and LP filter requirements if the SSB signal at point A has a 3-kHz bandwidth.

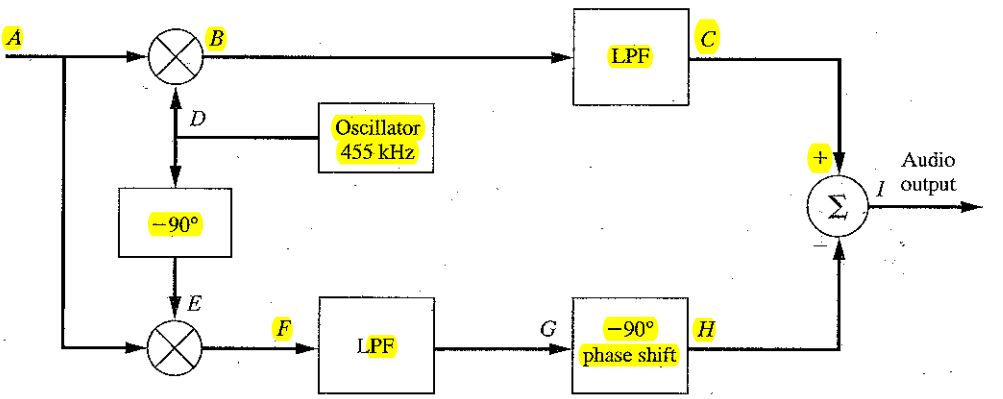

Figure P5–18

5–19 Can a Costas loop, shown in Fig. 5–3, be used to demodulate an SSB-AM signal? Use mathematics to demonstrate that your answer is correct.

5–20 A modulated signal is described by the equation

$$s(t) = 10\cos[(2\pi \times 10^8)t + 10\cos(2\pi \times 10^3 t)]$$

Find each of the following:

(a) Percentage of AM.

(b) Normalized power of the modulated signal.

(c) Maximum phase deviation.

(d) Maximum frequency deviation.

★ **5–21** A sinusoidal signal $m(t) = \cos 2\pi f_m t$ is the input to an angle-modulated transmitter, where the carrier frequency is $f_c = 1$ Hz and $f_m = f_c/4$.

(a) Plot $m(t)$ and the corresponding PM signal, where $D_p = \pi$.

(b) Plot $m(t)$ and the corresponding FM signal, where $D_f = \pi$.

5–22 A sinusoidal modulating waveform of amplitude 4 V and frequency 1 kHz is applied to an FM exciter that has a modulator gain of 50 Hz/V.
(a) What is the peak frequency deviation?
(b) What is the modulation index?

5–23 An FM signal has sinusoidal modulation with a frequency of $f_m = 15$ kHz and modulation index of $\beta = 2.0$.
(a) Find the transmission bandwidth by using Carson's rule.
(b) What percentage of the total FM signal power lies within the Carson rule bandwidth?

★ 5–24 An FM transmitter has the block diagram shown in Fig. P5–24. The audio frequency response is flat over the 20-Hz-to-15-kHz audio band. The FM output signal is to have a carrier frequency of 103.7 MHz and a peak deviation of 75 kHz.
(a) Find the bandwidth and center frequency required for the bandpass filter.
(b) Calculate the frequency f_0 of the oscillator.
(c) What is the required peak deviation capability of the FM exciter?

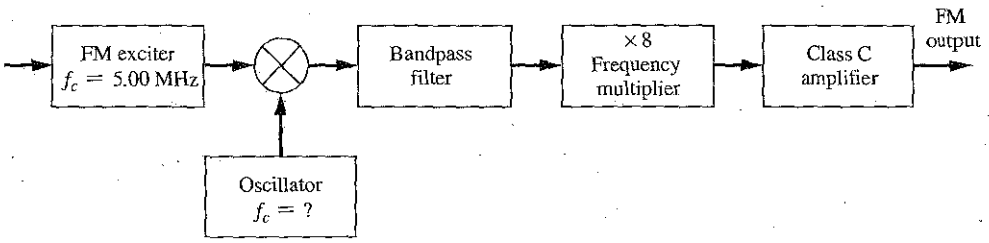

Figure P5–24

5–25 Analyze the performance of the FM circuit of Fig. 5–8b. Assume that the voltage appearing across the reverse-biased diodes, which provide the voltage variable capacitance, is $v(t) = 5 + 0.05\, m(t)$, where the modulating signal is a test tone, $m(t) = \cos \omega_1 t$, $\omega_1 = 2\pi f_1$, and $f_1 = 1$ kHz. The capacitance of each of the biased diodes is $C_d = 100/\sqrt{1 + 2v(t)}$ pF. Assume that $C_0 = 180$ pF and that L is chosen to resonate at 5 MHz.
(a) Find the value of L.
(b) Show that the resulting oscillator signal is an FM signal. For convenience, assume that the peak level of the oscillator signal is 10 V. Find the parameter D_f.

★ 5–26 A modulated RF waveform is given by $500 \cos[\omega_c t + 20 \cos \omega_1 t]$, where $\omega_1 = 2\pi f_1$, $f_1 = 1$ kHz, and $f_c = 100$ MHz.
(a) If the phase deviation constant is 100 rad/V, find the mathematical expression for the corresponding phase modulation voltage $m(t)$. What is its peak value and its frequency?
(b) If the frequency deviation constant is 1×10^6 rad/V-s, find the mathematical expression for the corresponding FM voltage $m(t)$. What is its peak value and its frequency?
(c) If the RF waveform appears across a 50-Ω load, determine the average power and the PEP.

5–27 Consider the FM signal $s(t) = 10 \cos [\omega_c t + 100 \int_{-\infty}^{t} m(\sigma)\, d\sigma]$, where $m(t)$ is a polar square-wave signal with a duty cycle of 50%, a period of 1 s, and a peak value of 5 V.
(a) Sketch the instantaneous frequency waveform and the waveform of the corresponding FM signal. (See Fig. 5–9.)
(b) Plot the phase deviation $\theta(t)$ as a function of time.
(c) Evaluate the peak frequency deviation.

5–28 A carrier $s(t) = 100 \cos(2\pi \times 10^9 t)$ of an FM transmitter is modulated with a tone signal. For this transmitter, a 1-V (RMS) tone produces a deviation of 30 kHz. Determine the amplitude and frequency of all FM signal components (spectral lines) that are greater than 1% of the unmodulated carrier amplitude for the following modulating signals:
(a) $m(t) = 2.5 \cos(3\pi \times 10^4 t)$.
(b) $m(t) = 1 \cos(6\pi \times 10^4 t)$.

5–29 Referring to Eq. (5–58), show that

$$J_{-n}(\beta) = (-1)^n J_n(\beta)$$

★ **5–30** Consider an FM exciter with the output $s(t) = 100 \cos[2\pi\ 1{,}000t + \theta(t)]$. The modulation is $m(t) = 5 \cos(2\pi 8t)$, and the modulation gain of the exciter is 8 Hz/V. The FM output signal is passed through an ideal (brick-wall) bandpass filter that has a center frequency of 1,000 Hz, a bandwidth of 56 Hz, and a gain of unity. Determine the normalized average power
(a) At the bandpass filter input.
(b) At the bandpass filter output.

★ **5–31** A 1-kHz sinusoidal signal phase modulates a carrier at 146.52 MHz with a peak phase deviation of 45°. Evaluate the exact magnitude spectra of the PM signal if $A_c = 1$. Sketch your result. Using Carson's rule, evaluate the approximate bandwidth of the PM signal, and see if it is a reasonable number when compared with your spectral plot.

5–32 A 1-kHz sinusoidal signal frequency modulates a carrier at 146.52 MHz with a peak deviation of 5 kHz. Evaluate the exact magnitude spectra of the FM signal if $A_c = 1$. Sketch your result. Using Carson's rule, evaluate the approximate bandwidth of the FM signal, and see if it is a reasonable number when compared with your spectral plot.

5–33 The calibration of a frequency deviation monitor is to be verified by using a Bessel function test. An FM test signal with a calculated frequency deviation is generated by frequency modulating a sine wave onto a carrier. Assume that the sine wave has a frequency of 2 kHz and that the amplitude of the sine wave is slowly increased from zero until the discrete carrier term (at f_c) of the FM signal vanishes, as observed on a spectrum analyzer. What is the peak frequency deviation of the FM test signal when the discrete carrier term is zero? Suppose that the amplitude of the sine wave is increased further until this discrete carrier term appears, reaches a maximum, and then disappears again. What is the peak frequency deviation of the FM test signal now?

5–34 A frequency modulator has a modulator gain of 10 Hz/V, and the modulating waveform is

$$m(t) = \begin{cases} 0, & t < 0 \\ 5, & 0 < t < 1 \\ 15, & 1 < t < 3 \\ 7, & 3 < t < 4 \\ 0, & 4 < t \end{cases}$$

(a) Plot the frequency deviation in hertz over the time interval $0 < t < 5$.
(b) Plot the phase deviation in radians over the time interval $0 < t < 5$.

★ **5–35** A square-wave (digital) test signal of 50% duty cycle phase modulates a transmitter where $s(t) = 10 \cos[\omega_c t + \theta(t)]$. The carrier frequency is 60 MHz and the peak phase deviation is 45°. Assume that the test signal is of the unipolar NRZ type with a period of 1 ms and that it is symmetrical about $t = 0$. Find the exact spectrum of $s(t)$.

5–36 Two sinusoids, $m(t) = A_1 \cos \omega_1 t + A_2 \cos \omega_2 t$, phase modulate a transmitter. Derive a formula that gives the exact spectrum for the resulting PM signal in terms of the signal parameters A_c, ω_c, D_p, A_1, A_2, ω_1, and ω_2. [*Hint:* Use $e^{ja(t)} = (e^{ja_1(t)})(e^{ja_2(t)})$, where $a(t) = a_1(t) + a_2(t)$.]

5–37 Plot the magnitude spectrum centered on $f = f_c$ for an FM signal where the modulating signal is

$$m(t) = A_1 \cos 2\pi f_1 t + A_2 \cos 2\pi f_2 t$$

Assume that $f_1 = 10$ Hz and $f_2 = 17$ Hz, and that A_1 and A_2 are adjusted so that each tone contributes a peak deviation of 20 Hz.

5–38 For small values of β, $J_n(\beta)$ can be approximated by $J_n(\beta) = \beta^n/(2^n n!)$. Show that, for the case of FM with sinusoidal modulation, $\beta = 0.2$ is sufficiently small to give NBFM.

★ **5–39** A polar square wave with a 50% duty cycle frequency modulates an NBFM transmitter such that the peak phase deviation is 10°. Assume that the square wave has a peak value of 5 V, a period of 10 ms, and a zero-crossing at $t = 0$ with a positive-going slope.

(a) Determine the peak frequency deviation of this NBFM signal.

(b) Evaluate and sketch the spectrum of the signal, using the narrowband analysis technique. Assume that the carrier frequency is 30 MHz.

5–40 Design a wideband FM transmitter that uses the indirect method for generating a WBFM signal. Assume that the carrier frequency of the WBFM signal is 96.9 MHz and that the transmitter is capable of producing a high-quality FM signal with a peak deviation of 75 kHz when modulated by a 1-V (RMS) sinusoid of frequency 20 Hz. Show a complete block diagram of your design, indicating the frequencies and peak deviations of the signals at various points.

5–41 An FM signal, $100 \cos[\omega_c t + D_f \int_{-\infty}^{t} m(\sigma)\, d\sigma]$, is modulated by the waveform shown in Fig. P5–41. Let $f_c = 420$ MHz.

(a) Determine the value of D_f so that the peak-to-peak frequency deviation is 25 kHz.

(b) Evaluate and sketch the approximate PSD.

(c) Determine the bandwidth of this FM signal such that spectral components are down at least 40 dB from the unmodulated carrier level for frequencies outside that bandwidth.

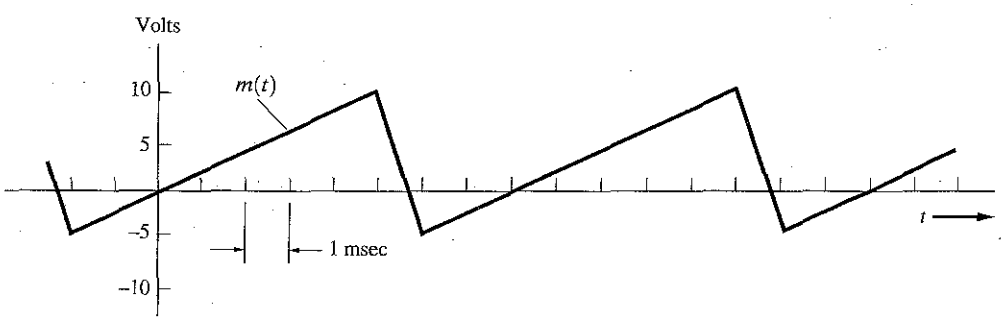

Figure P5–41

★ **5–42** A periodic multilevel digital test signal as shown in Fig. P5–42 modulates a WBFM transmitter. Evaluate and sketch the approximate power spectrum of this WBFM signal if $A_c = 5$, $f_c = 2$ GHz, and $D_f = 10^5$.

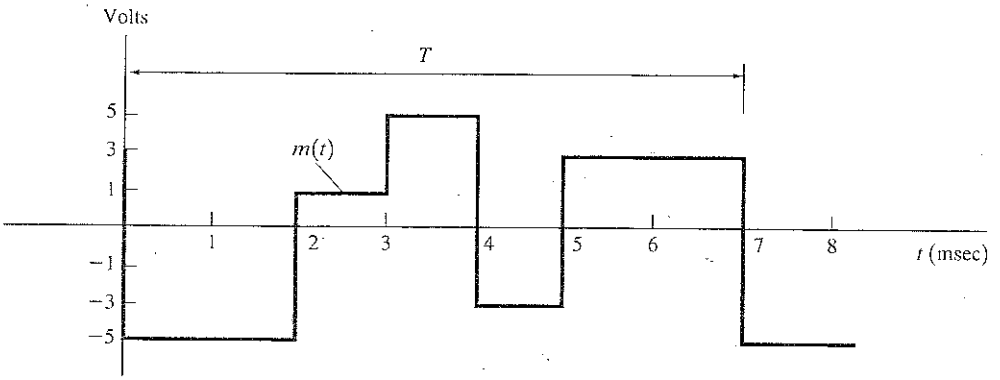

Figure P5–42

5–43 Refer to Fig. 5–16b, which displays the circuit diagram for a commonly used preemphasis filter network.

(a) Show that $f_1 = 1/(2\pi R_1 C)$.

(b) Show that $f_2 = (R_1 + R_2)/(2\pi R_1 R_2 C) \approx 1/(2\pi R_2 C)$.

(c) Evaluate K in terms of R_1, R_2, and C.

5–44 The composite baseband signal for FM stereo transmission is given by

$$m_b(t) = [m_L(t) + m_R(t)] + [m_L(t) - m_R(t)] \cos(\omega_{sc} t) + K \cos(\tfrac{1}{2}\omega_{sc} t)$$

A stereo FM receiver that uses a switching type of demultiplexer to recover $m_L(t)$ and $m_R(t)$ is shown in Fig. P5–44.

(a) Determine the switching waveforms at points C and D that activate the analog switches. Be sure to specify the correct phasing for each one. Sketch these waveforms.

(b) Draw a more detailed block diagram showing the blocks inside the PLL.

(c) Write equations for the waveforms at points A through F, and explain how this circuit works by sketching typical waveforms at each of these points.

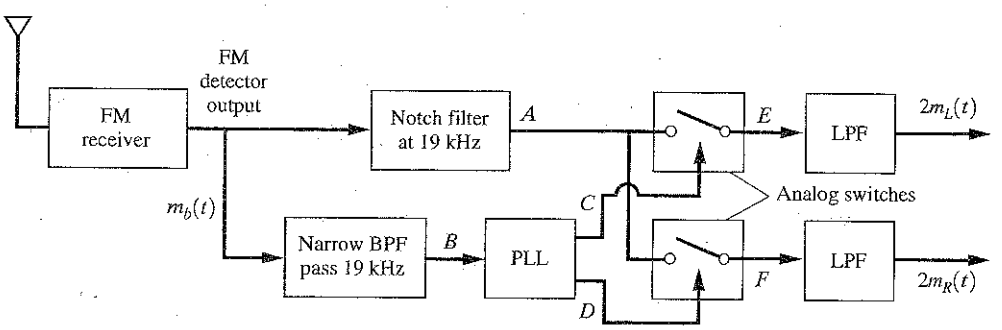

Figure P5–44

★ **5–45** In a communication system, two baseband signals (they may be analog or digital) are transmitted simultaneously by generating the RF signal

$$s(t) = m_1(t) \cos \omega_c t + m_2(t) \sin \omega_c t$$

The carrier frequency is 7.250 MHz. The bandwidth of $m_1(t)$ is 5 kHz and the bandwidth of $m_2(t)$ is 10 kHz.

(a) Evaluate the bandwidth of $s(t)$.

(b) Derive an equation for the spectrum of $s(t)$ in terms of $M_1(f)$ and $M_2(f)$.

(c) $m_1(t)$ and $m_2(t)$ can be recovered (i.e., detected) from $s(t)$ by using a superheterodyne receiver with two switching detectors. Draw a block diagram for the receiver and sketch the digital waveforms that are required to operate the samplers. Describe how they can be obtained. Show that the Nyquist sampling criterion is satisfied. (*Hint:* See Fig. P5–44.)

★ **5–46** A digital baseband signal consisting of rectangular binary pulses occurring at a rate of 24 kbits/s is to be transmitted over a bandpass channel.

(a) Evaluate the magnitude spectrum for OOK signaling that is keyed by a baseband digital test pattern consisting of alternating 1's and 0's.

(b) Sketch the magnitude spectrum and indicate the value of the first null-to-null bandwidth. Assume a carrier frequency of 150 MHz.

(c) For a random data pattern, find the PSD and plot the result. Compare this result with that obtained in parts (a) and (b) for alternating data.

5–47 Repeat Prob. 5–46 for the case of BPSK signaling.

★ **5–48** A carrier is angle modulated with a polar baseband data signal to produce a BPSK signal $s(t) = 10\cos[\omega_c t + D_p m(t)]$, where $m(t) = \pm 1$ corresponds to the binary data 10010110. $T_b = 0.0025$ sec and $\omega_c = 1{,}000\pi$. Using MATLAB, plot the BPSK signal waveform and its corresponding FFT spectrum for the following digital modulation indices:

(a) $h = 0.2$.

(b) $h = 0.5$.

(c) $h = 1.0$.

5–49 Evaluate the magnitude spectrum for an FSK signal with alternating 1 and 0 data. Assume that the mark frequency is 50 kHz, the space frequency is 55 kHz, and the bit rate is 2,400 bits/s. Find the first null-to-null bandwidth.

5–50 Assume that 4,800-bit/s random data are sent over a bandpass channel by BPSK signaling. Find the transmission bandwidth B_T such that the spectral envelope is down at least 35 dB outside this band.

5–51 As indicated in Fig. 5–22a, a BPSK signal can be demodulated by using a coherent detector wherein the carrier reference is provided by a Costas loop for the case of $h = 1.0$. Alternatively, the carrier reference can be provided by a squaring loop that uses a ×2 frequency multiplier. A block diagram for a squaring loop is shown in Fig. P5–51.

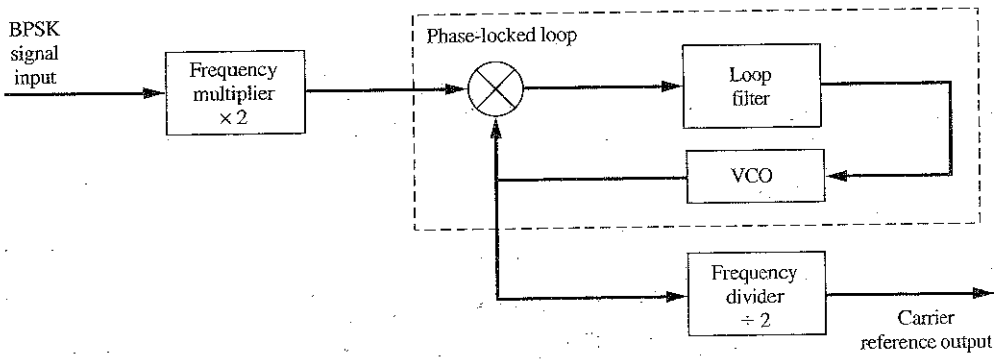

Figure P5–51

(a) Using the squaring loop, draw an overall block diagram for a BPSK receiver.
(b) By using mathematics to represent the waveforms, show how the squaring loop recovers the carrier reference.
(c) Demonstrate that the squaring loop does or does not have a 180° phase ambiguity problem.

5–52 A binary data signal is differentially encoded and modulates a PM transmitter to produce a differentially encoded phase-shift-keyed signal (DPSK). The peak-to-peak phase deviation is 180° and f_c is harmonically related to the bit rate R.
(a) Draw a block diagram for the transmitter, including the differential encoder.
(b) Show typical waveforms at various points on the block diagram if the input data sequence is 01011000101.
(c) Assume that the receiver consists of a superheterodyne circuit. The detector that is used is shown in Fig. P5–52, where $T = 1/R$. If the DPSK IF signal $v_1(t)$ has a peak value of A_c volts, determine the appropriate value for the threshold voltage setting V_T.
(d) Sketch the waveforms that appear at various points of this detector circuit for the data sequence in part (b).

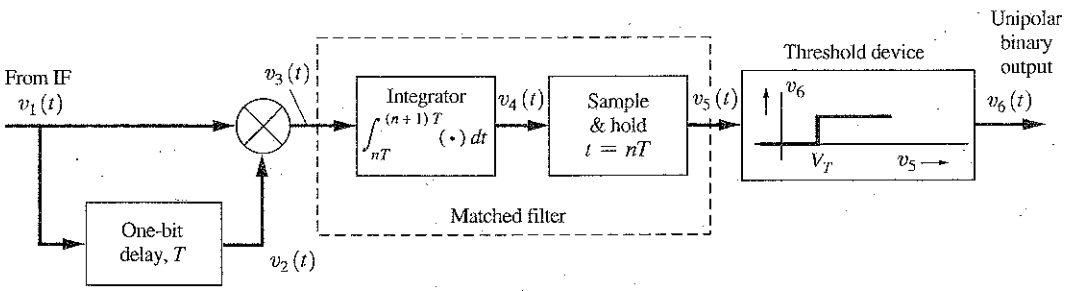

Figure P5–52

★ **5–53** A binary baseband signal is passed through a raised cosine-rolloff filter with a 50% rolloff factor and is then modulated onto a carrier. The data rate is 64 kbits/s. Evaluate
(a) The absolute bandwidth of a resulting OOK signal.
(b) The approximate bandwidth of a resulting FSK signal when the mark frequency is 150 kHz and the space frequency is 155 kHz.
(*Note:* It is interesting to compare these bandwidths with those obtained in Probs. 5–46 and 5–49.)

5–54 Evaluate the exact magnitude spectrum of the FSK signal that is emitted by a Bell-type 103 modem operating in the answer mode at 300 bits/s. Assume that the data are alternating 1's and 0's.

5–55 Starting with Eq. (5–84), work out all of the mathematical steps to derive the result given in Eq. (5–85).

5–56 When FSK signals are detected using coherent detection as shown in Fig. 5–28b, it is assumed that $\cos \omega_1 t$ and $\cos \omega_2 t$ are orthogonal functions. This is approximately true if $f_1 - f_2 = 2\,\Delta F$ is sufficiently large. Find the *exact* condition required for the mark and space FSK signals to be orthogonal. (*Hint:* The answer relates f_1, f_2, and R.)

5–57 Show that the approximate transmission bandwidth for FSK is given by $B_T = 2R(1 + h/2)$, where h is the digital modulation index and R is the bit rate.

★ **5–58** Assume that a QPSK signal is used to send data at a rate of 30 Mbits/s over a satellite transponder. The transponder has a bandwidth of 24 MHz.

(a) If the satellite signal is equalized to have an equivalent raised cosine filter characteristic, what is the rolloff factor r required?
(b) Could a rolloff factor r be found so that a 50-Mbit/s data rate could be supported?

★ **5-59** A QPSK signal is generated with nonrectangular data pulses on the I and Q channels. The data pulses have spectra corresponding to the transfer function of a square-root raised cosine-rolloff filter.

(a) Find the formula for the PSD of the QPSK signal.
(b) Plot the PSD for the complex envelope of the QPSK signal, where the rolloff factor is $r = 0.35$ and the data rate is normalized to $R = 1$ bit/s. Plot your result in dB versus frequency normalized to the bit rate, similar to that shown in Fig. 5–33.

5–60 Show that two BPSK systems can operate simultaneously over the same channel by using quadrature (sine and cosine) carriers. Give a block diagram for the transmitters and receivers. What is the overall aggregate data rate R for this quadrature carrier multiplex system as a function of the channel null bandwidth B_T? How does the aggregate data rate of the system compare to the data rate for a system that time-division multiplexes the two sources and then transmits the TDM data via a QPSK carrier?

5–61 An 18,000-ft twisted-pair telephone line has a usable bandwidth of 750 kHz. Find the maximum data rate tha can be supported on this line to produce a null-to-null bandwidth of 750 kHz if
(a) QPSK signaling (rectangular pulses) with a single carrier is used.
(b) OFDM signaling with QPSK carriers is used.

5–62 Assume that a telephone line channel is equalized to allow bandpass data transmission over a frequency range of 400 to 3,100 Hz so that the available channel bandwidth is 2,700 Hz and the midchannel frequency is 1,750 Hz. Design a 16-symbol QAM signaling scheme that will allow a data rate of 9,600 bits/s to be transferred over the channel. In your design, choose an appropriate rolloff factor r and indicate the absolute and 6-dB QAM signal bandwidth. Discuss why you selected the particular value of r that you used.

5–63 Assume that $R = 9{,}600$ bits/s. For rectangular data pulses, calculate the *second* null-to-null bandwidth of BPSK, QPSK, MSK, 64PSK, and 64QAM. Discuss the advantages and disadvantages of using each of these signaling methods.

5–64 Referring to Fig. 5–31b, sketch the waveforms that appear at the output of each block, assuming that the input is a TTL-level signal with data 110100101 and $\ell = 4$. Explain how this QAM transmitter works.

5–65 Design a receiver (i.e., determine the block diagram) that will detect the data on a QAM waveform having an $M = 16$-point signal constellation as shown in Fig. 5–32. Explain how your receiver works. (*Hint:* Study Fig. 5–31b.)

5–66 Using MATLAB, plot the QPSK and OQPSK in-phase and quadrature modulation waveforms for the data stream

$$\{-1, -1, -1, +1, +1, +1, -1, -1, -1, +1, -1, -1, +1, -1, -1\}$$

Use a rectangular pulse shape. For convenience, let $T_b = 1$.

★ **5-67** For $\pi/4$ QPSK signaling,
(a) Calculate the carrier phase shifts when the input data stream is 10110100101010, where the leftmost bits are first applied to the transmitter.
(b) Find the absolute bandwidth of the signal if $r = 0.5$ raised cosine-rolloff filtering is used and the data rate is 1.5 Mbits/s.

5–68 **(a)** Fig. 5–34 shows the $x(t)$ and $y(t)$ waveforms for Type II MSK. Redraw these waveforms for the case of Type I MSK.
(b) Show that Eq. (5–114b) is the Fourier transform of Eq. (5–114a).

5–69 Using MATLAB, plot the MSK Type I modulation waveforms $x(t)$ and $y(t)$ and the MSK signal $s(t)$. Assume that the input data stream is

$$\{+1, -1, -1, +1, -1, -1, +1, -1, -1, +1, +1, -1, +1, +1, -1\}$$

Assume also that $T_b = 1$ and that f_c has a value such that a good plot of $s(t)$ is obtained in a reasonable amount of computer time.

5–70 Repeat Prob. 5–69, but use the data stream

$$\{-1, -1, -1, +1, +1, +1, -1, -1, -1, +1, -1, -1, +1, -1, -1\}$$

This data stream is the differentially encoded version of the data stream in Prob. 5–69. The generation of FFSK is equivalent to Type I MSK with differential encoding of the data input. FFSK has a one-to-one relationship between the input data and the mark and space frequencies.

★ **5–71** Using MATLAB, plot the MSK Type II modulation waveforms $x(t)$ and $y(t)$ and the MSK signal $s(t)$. Assume that the input data stream is

$$\{-1, -1, -1, +1, +1, +1, -1, -1, -1, +1, -1, -1, +1, -1, -1\}$$

Assume also that $T_b = 1$ and f_c has a value such that a good plot of $s(t)$ is obtained in a reasonable amount of computer time.

5–72 Show that MSK can be generated by the serial method of Fig. 5–36c. That is, show that the PSD for the signal at the output of the MSK bandpass filter is the MSK spectrum as described by Eqs. (5–115) and (5–2b).

★ **5–73** GMSK is generated by filtering rectangular-shaped data pulses with a Gaussian filter and applying the filtered signal to an MSK transmitter.
(a) Show that the Gaussian filtered data pulse is

$$p(t) = \left(\sqrt{\frac{2\pi}{\ln 2}}\right)(BT_b)\int_{\frac{t}{TB_b}-\frac{1}{2}}^{\frac{t}{TB_b}+\frac{1}{2}} e^{-\left[\frac{2\pi^2}{\ln 2}(BT_b)^2x^2\right]}\,dx$$

[*Hint:* Evaluate $p(t) = h(t)*\Pi(t/T_b)$, where $h(t) = \mathcal{F}^{-1}[H(f)]$ and $H(f)$ is described by Eq. (5–116).]
(b) Plot $p(t)$ for $BT_b = 0.3$ and T_b normalized to $T_b = 1$.

5–74 Recompute the spectral efficiencies for all of the signals shown in Table 5–7 by using a 40-dB bandwidth criterion.

5–75 Evaluate and plot the PSD for OFDM signaling with $N = 64$. Find the bandwidth of this OFDM signal if the input data rate is 10 Mbits/s and each carrier uses 16PSK modulation.

5–76 Prove that Eq. (5–123)—the autocorrelation for an m-sequence PN code—is correct. *Hint:* Use the definition of the autocorrelation function, $R_c(\tau) = \langle c(t)c(t+\tau)\rangle$, and Eq. (5–122), where

$$c(t) = \sum_{-\infty}^{\infty} c_n p(t - nT_c)$$

and

$$p(t) = \begin{cases} 1, & 0 < t < T_c \\ 0, & t \text{ elsewhere} \end{cases}$$

5–77 Find an expression for the PSD of an m-sequence PN code when the chip rate is 10 MHz and there are eight stages in the shift register. Sketch your result.

5–78 Referring to Fig. 5–40a, show that the complex Fourier series coefficients for the autocorrelation of an m-sequence PN waveform are given by Eq. (5–128).

★ **5–79** Assume that the modulator and demodulator for the FH-SS system of Fig. 5–42 are of the FSK type.

(a) Find a mathematical expression for the FSK-FH-SS signal $s(t)$ at the transmitter output.

(b) Using your result for $s(t)$ from part (a) as the receiver input in Fig. 5–42b [i.e., $r(t) = s(t)$], show that the output of the receiver bandpass filter is an FSK signal.