ELE 537, Communication Systems
Exam 2, Fall 2021
Instructor: Dr. Chadi Abou-Rjeily

Problem 1: (7 points)
By applying the Poisson sum formula, show that:

$$\text{sinc}(f)\left[\sum_{k=-\infty\ ;\ k\neq\pm 3}^{+\infty} e^{j2\pi kf}\right] = a\delta(f) - b\text{sinc}(cf)\cos(d\pi f)$$

where a, b, c and d are four constant integers to be determined.
hint: The Poisson sum formula is given by:

$$\sum_{k\in\mathbb{Z}} e^{j2\pi kT_b f} = \frac{1}{T_b}\sum_{k\in\mathbb{Z}} \delta\left(f - \frac{k}{T_b}\right)$$

$$\begin{aligned}\text{sinc}(f)\left[\sum_{k=-\infty\ ;\ k\neq\pm 3}^{+\infty} e^{j2\pi kf}\right] &= \text{sinc}(f)\left[\sum_{k=-\infty}^{+\infty} e^{j2\pi kf} - e^{j6\pi f} - e^{-j6\pi f}\right] \\ &= \text{sinc}(f)\left[\sum_{k\in\mathbb{Z}} \delta(f-k) - 2\cos(6\pi f)\right]\end{aligned}$$

where the Poisson sum formula was applied with $T_b = 1$. Therefore:

$$\begin{aligned}\text{sinc}(f)\left[\sum_{k=-\infty\ ;\ k\neq\pm 3}^{+\infty} e^{j2\pi kf}\right] &= \sum_{k\in\mathbb{Z}} \text{sinc}(k)\delta(f-k) - 2\text{sinc}(f)\cos(6\pi f) \\ &= \delta(f) - 2\text{sinc}(f)\cos(6\pi f)\end{aligned}$$

since $\text{sinc}(k) = 1$ for $k = 0$ and $\text{sinc}(k) = 0$ for $k \neq 0$. Therefore, $a = 1$, $b = 2$, $c = 1$ and $d = 6$.

Problem 2: (18 points: $(2,5,5,4,2)$)
Consider the following binary RZ signalling format where the signal returns to zero at $T_b/4$ where T_b is the bit duration:

- The amplitude level $-2A$ is used to transmit the binary 0.
- The amplitude level $+A$ is used to transmit the binary 1.

Assume that a binary 0 is generated with probability $\Pr(0) = 1/3$ and a binary 1 is generated with probability $\Pr(1) = 2/3$.

a. Give the expression of the pulse shape and determine its Fourier transform.

b. Express the average power as a function of A.

c. Find the autocorrelation function of the data.

d. Derive the expression of the power spectral density (PSD) and provide a labeled sketch of this PSD.

e. Relate the null bandwidth to the bit rate R.

a. $f(t) = \text{rect}\left(\frac{t}{T_b/4}\right) \quad \rightleftharpoons \quad F(f) = \frac{T_b}{4}\text{sinc}\left(\frac{T_b}{4}f\right)$.

b.

$$P_{av} = \frac{1}{3} \times \frac{1}{T_b}\int_0^{T_b/4}(-2A)^2 \mathrm{d}t + \frac{2}{3} \times \frac{1}{T_b}\int_0^{T_b/4}(A)^2 \mathrm{d}t$$
$$= \frac{1}{3} \times A^2 + \frac{2}{3} \times \frac{A^2}{4} = \frac{A^2}{2}$$

c. - For $k = 0$:

a_n	a_n^2	Pr
-2A	$4A^2$	1/3
+ A	A^2	2/3

implying that $R(0) = 2A^2$.

- For $k \neq 0$:

a_n	a_{n+k}	$a_n a_{n+k}$	Pr
$-2A$	$-2A$	$4A^2$	$\frac{1}{3} \times \frac{1}{3} = \frac{1}{9}$
$-2A$	$+A$	$-2A^2$	$\frac{1}{3} \times \frac{2}{3} = \frac{2}{9}$
$+A$	-2A	$-2A^2$	$\frac{2}{3} \times \frac{1}{3} = \frac{2}{9}$
$+A$	$+A$	A^2	$\frac{2}{3} \times \frac{2}{3} = \frac{4}{9}$

implying that $R(k) = 0$ for $k \neq 0$.

d.

$$\mathcal{P}_s(f) = \frac{1}{T_b}\frac{T_b^2}{16}\text{sinc}^2\left(\frac{T_b}{4}f\right)[2A^2]$$
$$= \frac{A^2 T_b}{8}\text{sinc}^2\left(\frac{T_b}{4}f\right)$$

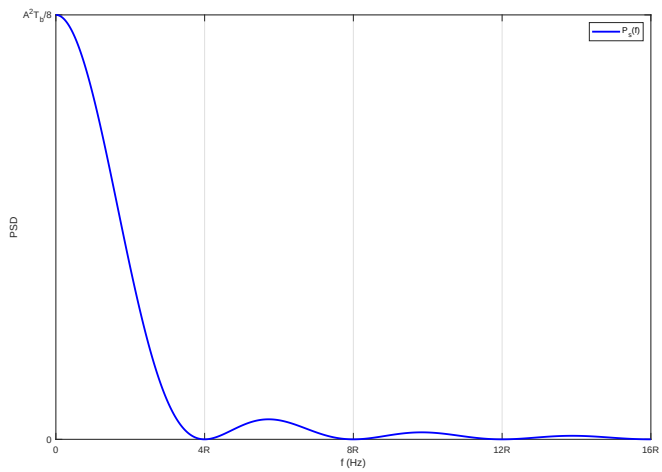

e. $B_{null} = \frac{4}{T_b} = 4R$.

Problem 3: (10 points: $(3,3,4)$**)**
The following three parts are independent:

a. Apply differential encoding on the sequence 01101001 using 1 as a reference bit.

b. 10 identical regenerative repeaters are cascaded in series along a communication channel where each repeater has an error probability of 0.3. What is the probability that 3 repeaters are in error?

c. A 32-level digital signal employs sinc-type pulses and occupies a bandwidth of 100 kHz. Find the value of the bit duration.

a.

d_n		0	1	1	0	1	0	0	1
e_n	1	1	0	1	1	0	0	0	1

b.

$$P_3 = \binom{10}{3} \times 0.3^3 \times 0.7^7 = 0.2668$$

c. $L = 32$ and $B = 100$ kHz:

$$B = \frac{1}{2}D \qquad \text{(sinc-type pulses)} \;\Rightarrow\; D = 2B$$

$$R = \log_2(L)D = 2\log_2(L)B \;\Rightarrow\; T_b = \frac{1}{R} = \frac{1}{2\log_2(L)B} = \frac{1}{2\times 5\times 100} = 0.001 \text{ msec} = 1\ \mu\text{sec}$$

Problem 4: (20 points: $(2,2,2,3,3,8)$**)**
Consider the four signals shown in the figure below all having a bit rate of 1 kbits/s.

- Signal 1 is a binary signal using rect-type pulses.
- Signal 2 is a binary signal using sinc-type pulses.
- Signal 3 is a 4-level signal using rect-type pulses.
- Signal 4 is a 4-level signal using sinc-type pulses.

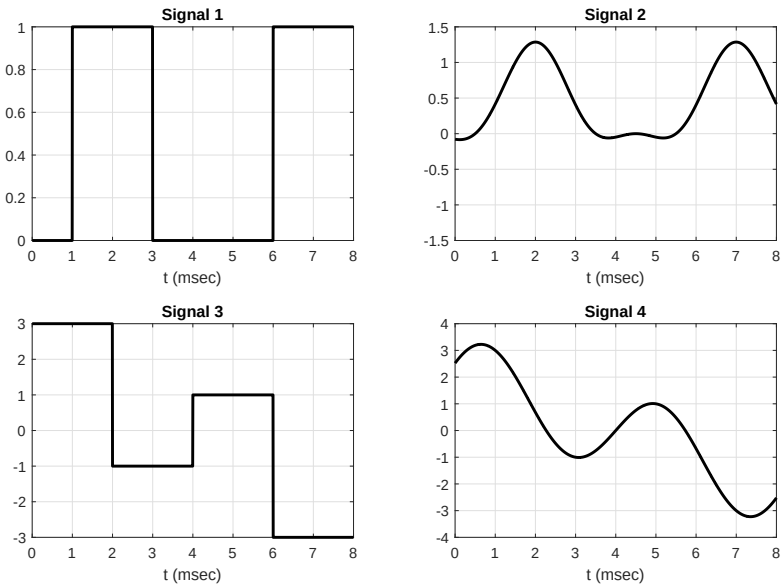

a. Which one of the above signals is the easiest to generate? Justify your answer.

b. Which one of the above signals is the easiest to decode in the presence of noise? Justify your answer.

c. Which one of the above signals has the smallest bandwidth? Justify your answer.

d. Among signal 1 and signal 2, which signal requires a higher level of clock synchronisation? Justify your answer.

e. Do signal 3 and signal 4 correspond to the same sequence of symbols? Justify you answer.

f. Provide estimates for the bandwidths of the above four signals.

a. Signal 1 is the easiest to generate since rectangular pulses are easy to generate (on-off switch) and only one generator is needed (one non-zero voltage level).

b. Signal 1 is the easiest to decode since the received signal can be sampled anywhere within the bit duration and the receiver needs to distinguish between only two amplitude levels (one threshold level).

c. Signal 4 has the smallest bandwidth since it is a multi-level signal (smaller value of the baud rate for a fixed bit rate) that uses sinc-type pules (that minimize the bandwidth).

d. Signal 2 requires a higher level of clock synchronisation since this signal must be sampled at exactly the center of the bit durations.

e. Signal 3 and signal 4 correspond to the same sequence of symbols. Sampling signal 3 anywhere within the symbol duration and sampling signal 4 at the centers of the symbol durations (at 1 msec, 3 msec, 5 msec and 7 msec), we observe that both signals correspond to the following sequence of 4 symbols: $+3, -1, +1, -3$.

f.

$$B_1 = R = 1 \text{ kHz} \quad ; \quad B_2 = \frac{1}{2}R = 500 \text{ Hz}$$
$$B_3 = D = 500 \text{ Hz} \quad ; \quad B_4 = \frac{1}{2}D = 250 \text{ Hz}$$

where $D = \frac{R}{\log_2(L)} = \frac{R}{2} = 500$ bauds.

Problem 5: (14 points: $(4,(6,4))$**)**
The following two parts are independent.

a. Denote by $h(t)$ the impulse response of a filter that satisfies the Nyquist first method for eliminating the inter-symbol-interference (ISI) at a baud rate of 2 bauds. Simplify the expression: $h(t)\sum_{k\in\mathbb{Z}}\delta(t-0.5k)$.

b. Consider two filters whose transfer functions are given by:

$$H_1(f) = \text{rect}\left(\frac{f}{100}\right) \quad ; \quad H_2(f) = \text{tri}\left(\frac{f}{100}\right)$$

b.1 Determine the maximum baud rate at which the above filters satisfy the Nyquist first method for eliminating the ISI.

b.2 Which filter requires a higher level of symbol synchronisation? Justify your answer.

a. $D = 2$ bauds implies that $T_s = 0.5$ sec. Since the filter satisfies the Nyquist first method:

$$h(kT_s) = h(0.5k) = \begin{cases} C, & k = 0; \\ 0, & k \neq 0. \end{cases}$$

where C is a constant. Therefore:

$$h(t)\sum_{k\in\mathbb{Z}}\delta(t-0.5k) = \sum_{k\in\mathbb{Z}} h(0.5k)\delta(t-0.5k) = C\delta(t)$$

b. b.1 $h_1(t) = 100\text{sinc}(100t)$ that goes to zero at multiples of $1/100$. Therefore, $T_{s,1,min} = \frac{1}{100}$ s implying that $D_{1,max} = 100$ bauds. Similarly, $h_2(t) = 100\text{sinc}^2(100t)$ that goes to zero at multiples of $1/100$. Therefore, $T_{s,2,min} = \frac{1}{100}$ s implying that $D_{2,max} = 100$ bauds.

b.2 $h_1(t)$ requires a higher level of symbol synchronisation as compared to $h_2(t)$ since the function $\text{sinc}^2(\cdot)$ approaches 0 faster than the function $\text{sinc}(\cdot)$.

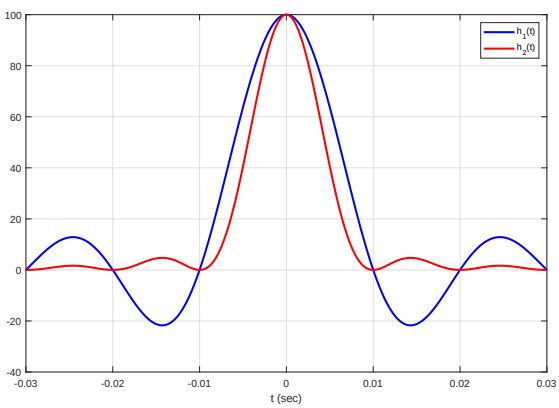

Problem 6: (6 points)
Consider a raised cosine-rolloff Nyquist filter that eliminates ISI at a maximum baud rate of 5 kbauds and that has a rolloff factor of $1/4$. The transfer function of the filter is shown below:

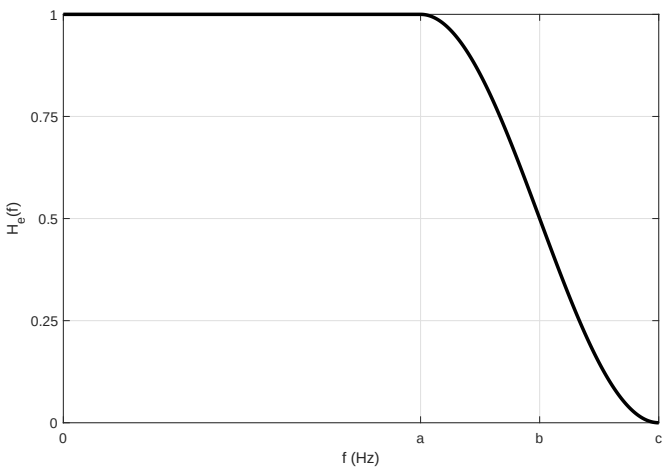

Find the values of the frequencies a, b and c.

$$
\begin{aligned}
D = 2f_0 \quad &\Rightarrow \quad b = f_0 = 2.5 \text{ kHz} \\
B = (1+r)f_0 \quad &\Rightarrow \quad c = B = 3.125 \text{ kHz} \\
f_1 = (1-r)f_0 \quad &\Rightarrow \quad a = f_1 = 1.875 \text{ kHz}
\end{aligned}
$$

Problem 7: (5 points)
Delta Modulation (DM) is applied on the analog signal $w(t)$ given by:

$$w(t) = \begin{cases} t^2 - t + 1, & 0 \leq t \leq 5; \\ 0, & \text{otherwise.} \end{cases}$$

What is the minimum value of the step size that eliminates slope-overload noise at a sampling frequency of 200 Hz?

- For $0 \leq t \leq 5$, $w'(t) = 2t - 1$ implying that $\max|w'(t)| = 9$ for $t = 5$.
- In order to eliminate slope-overload noise:

$$\frac{\delta}{T_s} \geq \max|w'(t)| \;\Rightarrow\; \delta f_s \geq 9 \;\Rightarrow\; \delta \geq \frac{9}{200} = 0.045 \quad \text{(V)}$$

Problem 8: (10 points: (5×2))
A Delta Modulated (DM) signal is shown in the figure below where the sampling frequency is equal to 1 kHz:

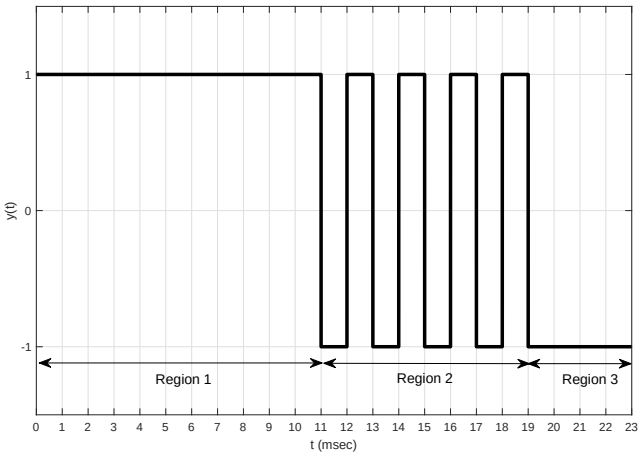

a. What is the value of the bit rate?

b. In which region does granular noise prevail? Justify your answer.

c. In which region does slope-overload noise prevail? Justify your answer.

d. In which region is the analog signal increasing?

e. In which region is the analog signal decreasing?

a. $R = 1 \times f_s = 1$ kbits/s.

b. Granular noise prevails in region 2 since the fluctuations of the DM signal indicate that the analog signal is undergoing small variations.

c. Slope-overload noise prevails in region 1 since a long sequence of consecutive 0's or 1's indicate that the analog signal is undergoing large variations.

d. In region 1 (a long sequence of 1's).

e. In region 3 (a long sequence of 0's).

Problem 9: (10 points: $(1,1,1,1,2,2,2)$**)**
Consider the TDM system shown in the figure below:

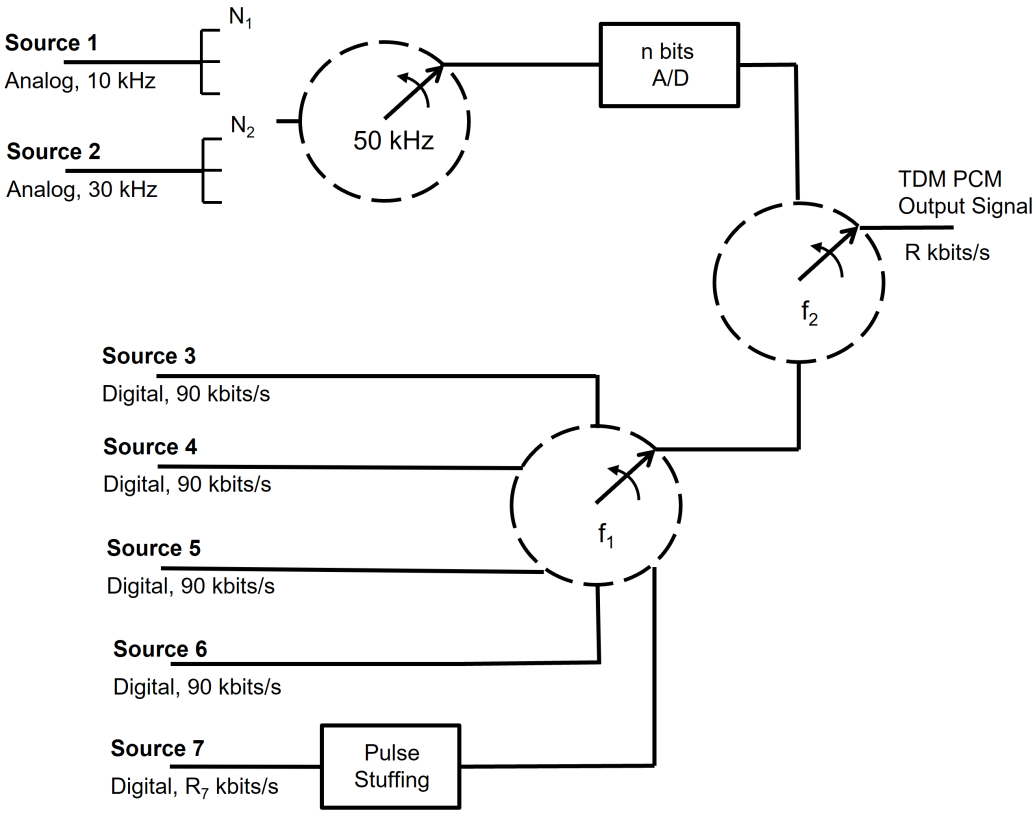

- Source 1: analog with a bandwidth of 10 kHz and is connected N_1 times to the commutator.
- Source 2: analog with a bandwidth of 30 kHz and is connected N_2 times to the commutator.
- Sources 3-6: digital with a bit rate of 90 kbits/s.
- Sources 7: digital with a bit rate of R_7 kbits/s.

a. Find the value of N_1.

b. Find the value of N_2.

c. Suggest one possible value for the bit rate R_7 of source 7.

d. Find the value of the commutator's rotating frequency f_1.

e. Find the value of the commutator's rotating frequency f_2.

f. Find the bit rate R of the TDM PCM output signal.

g. Find the value of n (the number of bits in the A/D converter).

a. Source 1 needs to be sampled at least at 20 kHz implying that $N_1 = 1$.

b. Source 2 needs to be sampled at least at 60 kHz implying that $N_2 = 2$.

c. $R_7 \leq 90$ kbits/s. For example, $R_7 = 85$ kbits/s.

d. $f_1 = 90$ kHz (the same as the bit rates of the digital signals).

e. $f_2 = 5 \times f_1 = 5 \times 90 = 450$ kbits/s.

f. $R = 2 \times f_2 = 2 \times 450 = 900$ kbits/s.

g. $f_2 = n \times (N_1 + N_2) \times 50 \quad \Rightarrow n = \frac{450}{3 \times 50} = 3$.