LAU School of Engineering

ELE 537, Communication Systems
Exam 2, Fall 2022
Instructor: Dr. Chadi Abou-Rjeily

Problem 1: (5 points)
A multi-level signal is generated using sinc-type pulses. Find the number of levels if the signal has a bandwidth of 5 kHz and a bit rate of 60 kbits/s.

- Since sinc-type pulses are used, $B = \frac{1}{2}D = 5$ kHz implying that $D = 10$ kHz.
- $R = lD \;\Rightarrow\; l = \frac{R}{D} = \frac{60}{10} = 6$.
- Therefore, the number of levels is $L = 2^l = 2^6 = 64$.

Problem 2: (5 points)
A 2 kbits/s multi-level signal is shown below:

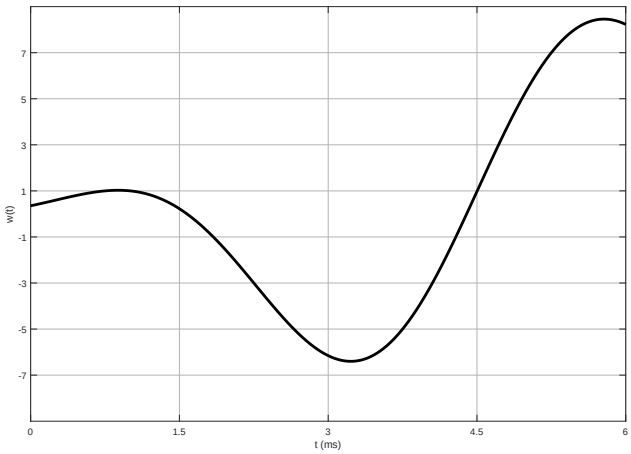

Find the binary sequence associated with this signal if the following coding is applied:

Voltage Level	Codeword
+7	110
+5	111
+3	101
+1	100
-1	000
-3	001
-5	011
-7	010

- From the table, $l = 3$ bits/symbol.
- $D = \frac{R}{l} = \frac{2}{3}$ kbauds implying that $T_s = \frac{3}{2} = 1.5$ ms.
- Sampling at the centers of the symbols durations (i.e. at the time instants 0.75, 2.25, 3.75, 5.25) results in the level values $+1, -3, -5, +7$.
- Therefore, the binary sequence is given by $100, 001, 011, 110$.

Problem 3: (5 points)
A DSL modem can communicate at one of the speeds $\{20, 30, 40, 50\}$ Mbits/s. Determine the achievable speed for reliable communications if the DSL cable has a bandwidth of 5 MHz with a signal-to-noise ratio of 20 dB.

$\frac{S}{N})_{dB} = 20 \Rightarrow \frac{S}{N} = 100$. According to Shannon's theorem:

$$R \leq C = B\log_2(1 + S/N) = 5 \times \log_2(101) = 33.29 \text{ Mbits/s}$$

Therefore, the achievable speed is 30 Mbits/s.

Problem 4: (10 points: $(3,3,4)$**)**
The following three parts are independent:

a. Apply differential encoding on the sequence 0100110 using 0 as a reference bit.

b. Apply differential decoding on the sequence 11010010 (the first bit is the reference bit).

c. 2 regenerative repeaters are cascaded in series along a communication channel where the error probabilities of these repeaters are equal to 0.1 and 0.3. What is the error probability at the output of the system?

a.

d_n		0	1	0	0	1	1	0
e_n	0	0	1	1	1	0	1	1

b.

e_n	1	1	0	1	0	0	1	0
d_n		0	1	1	1	0	1	1

c. Let $p_1 = 0.1$ and $p_2 = 0.3$:

$$\begin{aligned} P_{out} &= p_1(1-p_2) + (1-p_1)p_2 \\ &= 0.1 \times 0.7 + 0.9 \times 0.3 = 0.34 \end{aligned}$$

Problem 5: (10 points: $(3,7)$**)**
Consider a signal $w(t)$ whose probability density function is given by:

$$f_w(x) = Kx^2 \text{rect}\left(\frac{x}{2V}\right)$$

a. Show that K can be written as $K = \frac{a}{V^3}$ where a is a constant to be determined.

b. Is it better to quantize $w(t)$ using 3-bit uniform quantizing or 4-bit μ-law companding with $\mu = 20$?

$$\begin{aligned} \text{Uniform quantizing}: &\quad \alpha = 4.77 - 20\log_{10}(V/x_{rms}) \\ \mu\text{-law}: &\quad \alpha = 4.77 - 20\log_{10}[\ln(1+\mu)] \end{aligned}$$

a. $f_w(x)$ is different from zero over the interval $[-V \;\; V]$.

$$\int_{-V}^{V} f_w(x)\mathrm{d}x = 1 \;\Rightarrow\; K\int_{-V}^{V} x^2\mathrm{d}x = 1$$
$$\Rightarrow\; K\left[\frac{x^3}{3}\right]_{-V}^{V} = 1 \;\Rightarrow\; K\frac{2V^3}{3} = 1 \;\Rightarrow\; K = \frac{3}{2V^3}$$

b. $f_w(x)$ is centered around zero implying that $\bar{x} = 0$.

$$\begin{aligned} x_{rms}^2 &= \int_{-V}^{V} x^2 f_w(x)\mathrm{d}x = K\int_{-V}^{V} x^4\mathrm{d}x \\ &= \frac{3}{2V^3}\left[\frac{x^5}{5}\right]_{-V}^{V} = \frac{3}{2V^3}\frac{2V^5}{5} = \frac{3}{5}V^2 \;\Rightarrow\; x_{rms} = \sqrt{\frac{3}{5}}V \end{aligned}$$

$$\left.\frac{S}{N}\right)_{uni} = 6\times 3 + \underbrace{\left[4.77 - 20\log_{10}(\sqrt{5/3})\right]}_{=2.55} = 20.55 \;\; \text{(dB)}$$

$$\left.\frac{S}{N}\right)_{\mu} = 6\times 4 + \underbrace{[4.77 - 20\log_{10}(\ln(21)]}_{=-4.9} = 19.1 \;\; \text{(dB)}$$

implying that 3-bit uniform quantizing is better since the SNR is higher.

Problem 6: (5 points)
Consider a filter whose transfer function is shown below:

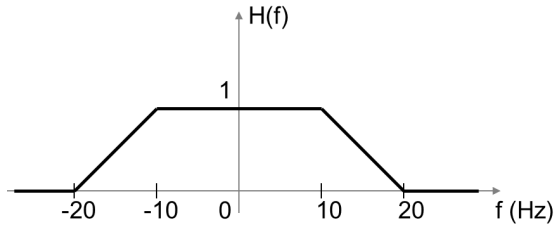

Determine wether the above filter satisfies the Nyquist first method for eliminating the Inter-Symbol-Interference (ISI) at a baud rate of 15 bauds.

$$H(f) = 2\text{tri}\left(\frac{f}{20}\right) - \text{tri}\left(\frac{f}{10}\right)$$
$$\Rightarrow\ h(t) = 40\text{sinc}^2(20t) - 10\text{sinc}^2(10t)$$
$$\Rightarrow\ h(kT_s) = h\left(\frac{k}{15}\right) = 40\text{sinc}^2\left(\frac{4k}{3}\right) - 10\text{sinc}^2\left(\frac{2k}{3}\right)$$

For example, for $k = 1$, $h(T_s) \neq 0$ implying that the filter does not satisfy the Nyquist first method for eliminating ISI.

Problem 7: (5 points)
A 2 kbits/s binary waveform is converted into a 32-level multi-level signal that is passed through a channel with a raised cosine-rolloff Nyquist filter characteristic having a rolloff factor of 0.5. Find the 6-dB bandwidth and absolute bandwidth of the channel.

- $L = 32$ implying that $l = 5$.
- $R = lD = 2000 \quad \Rightarrow \quad D = 400$ bauds.
- $D = 2f_0 \quad \Rightarrow \quad f_0 = 200$ Hz (the 6-dB bandwidth).
- $D = 2B/(1+r) \quad \Rightarrow \quad B = 300$ Hz (the absolute bandwidth). Or, equivalently, $B = f_0(1+r) = 200 \times 1.5 = 300$ Hz.

Problem 8: (5 points)
Consider the two filters whose transfer functions are given by:

$$H_1(f) = \frac{1}{10}\text{rect}\left(\frac{f}{10}\right) \;\; ; \;\; H_2(f) = \frac{1}{10}\text{tri}\left(\frac{f}{10}\right)$$

Which filter is more robust against synchronisation errors at a baud rate of 10 bauds? Justify your answer.

- $h_1(t) = \text{sinc}(10t)$ and $h_2(t) = \text{sinc}^2(10t)$ which are shown below:

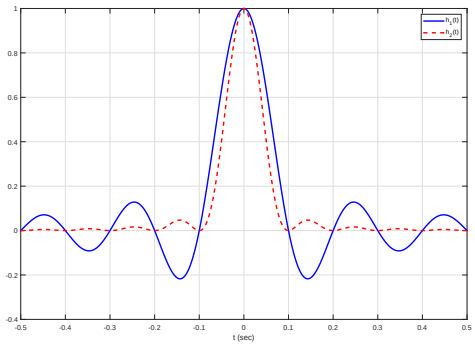

- At a symbol duration of $T_s = 0.1$ sec, the Nyquist first method is satisfied. The function $h_2(t)$ decays faster towards zero implying that filter-2 is more robust against synchronisation errors.

Problem 9: (5 points)
Consider the following binary signalling scheme:

- The amplitude level $-A$ is used to transmit the binary 0 that is generated with probability $\Pr(0) = 1/4$.
- The amplitude level xA is used to transmit the binary 1 that is generated with probability $\Pr(1) = 3/4$.

Find the value of x so that the data autocorrelation function satisfies: $R(k) = 0$ for $k \neq 0$.

- For $k \neq 0$:

a_n	a_{n+k}	$a_n a_{n+k}$	Pr
$-A$	$-A$	A^2	$\frac{1}{4} \times \frac{1}{4} = \frac{1}{16}$
$-A$	xA	$-xA^2$	$\frac{1}{4} \times \frac{3}{4} = \frac{3}{16}$
xA	-A	$-xA^2$	$\frac{3}{4} \times \frac{1}{4} = \frac{3}{16}$
xA	xA	x^2A^2	$\frac{3}{4} \times \frac{3}{4} = \frac{9}{16}$

- Therefore:

$$R(k) = \frac{A^2}{16}\left[1 - 3x - 3x + 9x^2\right] = \frac{A^2}{16}(1-3x)^2 = 0 \;\Rightarrow\; x = \frac{1}{3}$$

Problem 10: (5 points)
Consider the bipolar line code and denote the high amplitude level by A. Assume that $\Pr(0) = 1/5$ and $\Pr(1) = 4/5$. Find the value of the probability $\Pr(a_n a_{n+3} = A^2)$.

- $a_n a_{n+3} = A^2$ if:
  - a_n corresponds to a binary 1.
  - a_{n+3} corresponds to a binary 1.
  - There is an odd number of 1's between a_n and a_{n+3}. In other words, a_{n+1} and a_{n+2} correspond to 0 and 1, respectively, or a_{n+1} and a_{n+2} correspond to 1 and 0, respectively.

Therefore:

$$\Pr(a_n a_{n+3} = A^2) = \frac{4}{5} \times \frac{4}{5} \times \left[\frac{1}{5} \times \frac{4}{5} + \frac{4}{5} \times \frac{1}{5}\right] = \frac{128}{625} = 0.2048$$

Problem 11: (10 points: $(2,5,3)$**)**
A binary nonreturn-to-zero (NRZ) line code is used to convey a random data pattern consisting of binary 0's and 1's. Denote by T_b the time needed to transmit one bit. Assume that a rectangular pulse shape is used and that the autocorrelation function of the data is given by:

$$R(k) = \begin{cases} \frac{1}{3}A^2, & k = 0; \\ \frac{1}{4}A^2, & k \neq 0. \end{cases}$$

a. Give the expression of the pulse shape and deduce its Fourier transform.

b. Derive the expression of the power spectral density (PSD).
hint: apply the Poisson sum formula: $\sum_{k\in\mathbb{Z}} e^{j2\pi k T_b f} = \frac{1}{T_b}\sum_{k\in\mathbb{Z}} \delta\left(f - \frac{k}{T_b}\right)$.

c. Provide a labeled sketch of the PSD and determine the null bandwidth.

a. $f(t) = \text{rect}(t/T_b) \;\Rightarrow\; F(f) = T_b \text{sinc}(T_b f)$.

b.

$$\begin{aligned}
\mathcal{P}_s(f) &= \frac{1}{T_b}(T_b\text{sinc}(T_b f))^2 \left[\frac{A^2}{3} + \frac{A^2}{4}\sum_{k=-\infty\,;\,k\neq 0}^{+\infty} e^{j2\pi k T_b f}\right] \\
&= T_b\text{sinc}^2(T_b f)\left[\frac{A^2}{3} + \frac{A^2}{4}\sum_{k=-\infty}^{+\infty} e^{j2\pi k T_b f} - \frac{A^2}{4}\right] \\
&= A^2 T_b\text{sinc}^2(T_b f)\left[\frac{1}{12} + \frac{1}{4}\frac{1}{T_b}\sum_{k=-\infty}^{+\infty}\delta\left(f - \frac{k}{T_b}\right)\right] \\
&= \frac{A^2 T_b}{12}\text{sinc}^2(T_b f) + \frac{A^2}{4}\text{sinc}^2(T_b f)\sum_{k=-\infty}^{+\infty}\delta\left(f - \frac{k}{T_b}\right) \\
&= \frac{A^2 T_b}{12}\text{sinc}^2(T_b f) + \frac{A^2}{4}\sum_{k=-\infty}^{+\infty}\underbrace{\text{sinc}^2(k)}_{\neq 0 \text{ for } k=0}\delta\left(f - \frac{k}{T_b}\right) = \frac{A^2 T_b}{12}\text{sinc}^2(T_b f) + \frac{A^2}{4}\delta(f)
\end{aligned}$$

c. From the below figure, $B_{null} = R = \frac{1}{T_b}$.

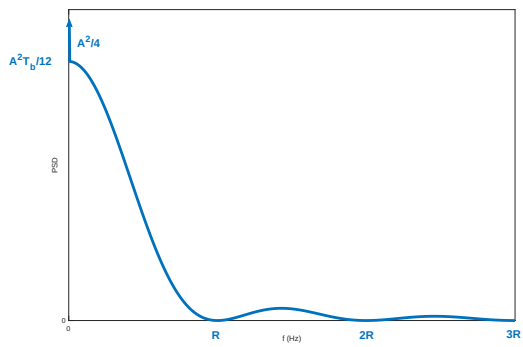

Problem 12: (10 points: $(2,3,3,2)$**)**
A 200 bits/s Delta Modulated (DM) signal is generated from the following analog signal:

$$w(t) = \begin{cases} 2t+1, & 0 \le t \le 2; \\ (t-2)^2+5, & 2 \le t \le 4; \\ 9, & t \ge 4; \\ 0, & \text{elsewhere.} \end{cases}$$

a. Find the time interval over which granular noise prevails.

b. Find the minimum value of the step size required to eliminate the slope-overload noise over the time interval $[0 \;\; 2]$.

c. For the value of the step size derived in part (b), find the time interval over which slope-overload noise prevails.

d. For the value of the step size derived in part (b), find the power of granular noise (in dB) assuming a bandwidth of 60 Hz (*hint*: the PSD of granular noise is given by $\frac{\delta^2}{6f_s}$).

a. Granular noise prevails for $t \ge 4$ since $w(t)$ is constant over this time interval.

b. $R = 1 \times f_s = 200$ bits/s implying that $T_s = 0.005$ sec. For $0 \le t \le 2$, $w'(t) = 2$ implying that slope-overload noise is eliminated if:

$$\frac{\delta}{T_s} \ge 2 \;\; \Rightarrow \;\; \delta \ge 0.01 \;\; \text{(V)}$$

c. For $\delta = 0.01$, there is no slope-overload noise for $0 \le t \le 2$ (from (b)). Similarly, for $t \ge 4$, there is no slope-overload noise since $w'(t) = 0$. For $2 \le t \le 4$, the slope-overload noise is different from zero for the values of t satisfying:

$$[(t-2)^2+5]' = 2(t-2) \ge \frac{\delta}{T_s} = 2 \;\; \Rightarrow \;\; t \ge 3$$

Therefore, slope-overload noise prevails over the time interval $[3 \;\; 4]$.

d.

$$P_{gran} = \int_{-B}^{B} \frac{\delta^2}{6f_s} \mathrm{d}f = \frac{\delta^2 B}{3f_s} = \frac{10^{-4} \times 60}{3 \times 200} = 10^{-5} \Rightarrow P_{gran})_{\text{dB}} = 10\log_{10}(10^{-5}) = -50 \text{ (dB)}$$

Problem 13: (7 points: $(3,2,2)$**)**
Consider the TDM system shown in the figure below:

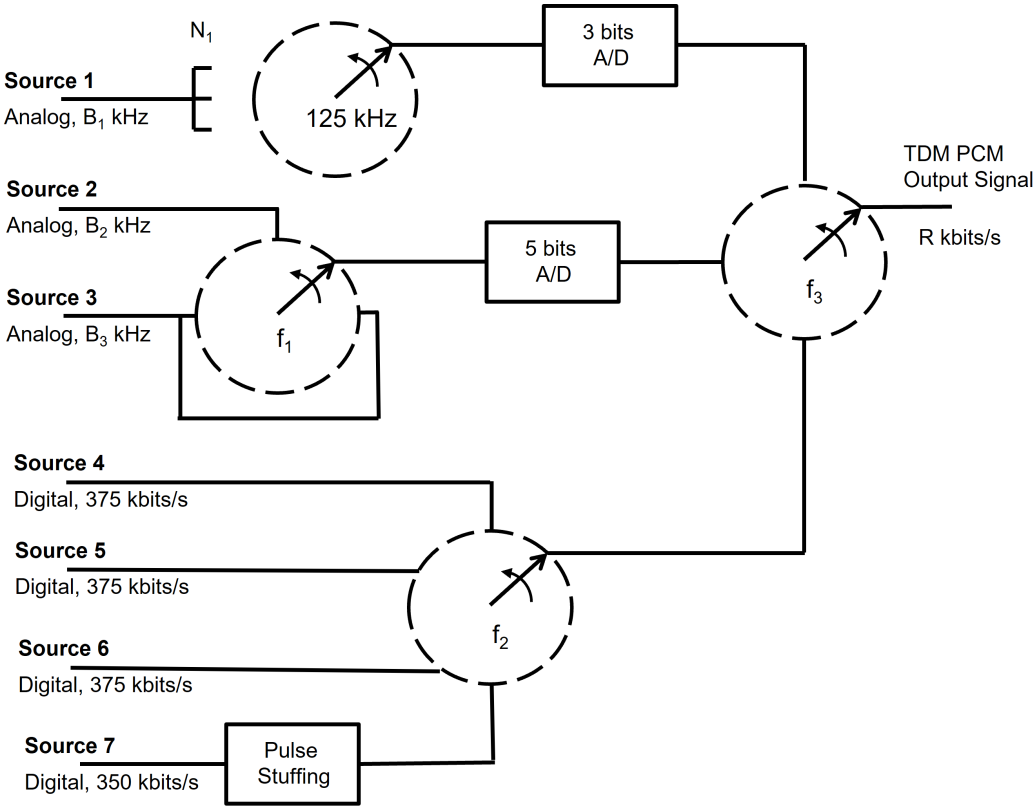

a. Find the value of the commutator's rotating frequency f_1.

b. Find the value of the number of connections N_1.

c. Find the value of the bandwidth B_1 if source 1 is sampled at the Nyquist rate.

a. $f_2 = 375$ kHz implying that $f_3 = 4 \times f_2 = 1500$ kHz. From the second branch of the system:

$$f_3 = 5 \times 3 \times f_1 = 1500 \;\Rightarrow\; f_1 = 100 \;\text{(kHz)}$$

b. From the first branch of the system:

$$f_3 = 3 \times N_1 \times 125 = 1500 \;\Rightarrow\; N_1 = 4 \;\text{(connections)}$$

c. Source 1 is sampled at $f_s = N_1 \times 125 = 500$ kHz. Since sampling occurs at the Nyquist rate, $f_s = 2B_1 = 500$ implying that $B_1 = 250$ kHz.

Problem 14: (13 points: $((5,1),(5,1,1))$**)**
Two TDM designs are implemented to accommodate one 180 Hz analog source and four 250 bits/s digital sources.

Design 1:

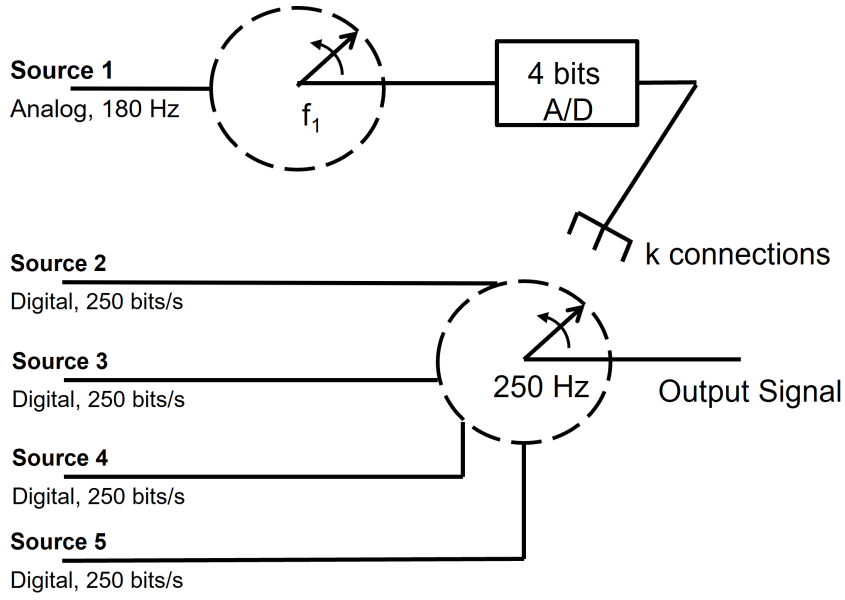

a. Find the rotating frequency f_1 and the number of connections k that minimize the bit rate of the output signal.

b. Find the bit rate of the output signal.

a. The following two relations must be satisfied:

$$\left.\begin{array}{l} 4f_1 = 250k \Rightarrow f_1 = 62.5k \\ f_1 \geq 2 \times 180 = 360 \end{array}\right\} \Rightarrow 62.5k \geq 360 \quad \Rightarrow \quad k \geq 5.76$$

$$\Rightarrow \quad k = 6 \text{ and } f_1 = 375 \text{ Hz}$$

b. $R_1 = (k+4) \times 250 = 2500$ bits/s.

Design 2:

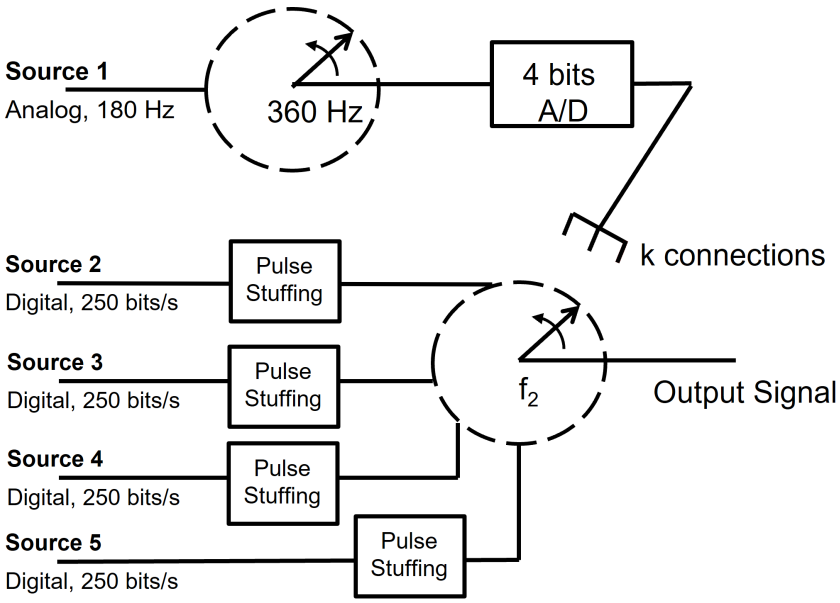

c. Find the rotating frequency f_2 and the number of connections k that minimize the bit rate of the output signal.

d. Find the bit rate of the output signal.

e. Which design is better? Justify your answer.

c. The following two relations must be satisfied:

$$\left.\begin{array}{l} 4\times 360 = k f_2 \Rightarrow f_2 = \frac{1440}{k} \\ f_2 \geq 250 \end{array}\right\} \Rightarrow \frac{1440}{k} \geq 250 \quad \Rightarrow \quad k \leq 5.76$$

$$\Rightarrow \quad k = 5 \ \text{ and } \ f_2 = 288 \text{ Hz}$$

d. $R_2 = (k+4)\times f_2 = 9\times 288 = 2592$ bits/s.

e. Since $R_1 < R_2$, then design 1 is better.