Signals and Systems
Assignment-7: Solution

Chadi Abou-Rjeily

Department of Electrical and Computer Engineering
Lebanese American University
chadi.abourjeily@lau.edu.lb

April 5, 2023

Exercise 1 (1)

- Find the z-transform and the region of convergence of $x[n] = \cos(\omega_0 n)u[n]$.
  - $x[n]$ can be written as:

$$x[n] = \frac{1}{2}e^{j\omega_0 n}u[n] + \frac{1}{2}e^{-j\omega_0 n}u[n]$$

  - On the other hand, given that:

$$\mathcal{Z}(\alpha^n u[n]) = \frac{z}{z-\alpha} \;\; ; \;\; ROC = \{z \; ; \; |z| > |\alpha|\}$$

  - Consequently:

$$\mathcal{Z}((e^{j\omega_0})^n u[n]) = \frac{z}{z - e^{j\omega_0}} \;\; ; \;\; ROC = \{z \; ; \; |z| > |e^{j\omega_0}| = 1\}$$

$$\mathcal{Z}((e^{-j\omega_0})^n u[n]) = \frac{z}{z - e^{-j\omega_0}} \;\; ; \;\; ROC = \{z \; ; \; |z| > |e^{-j\omega_0}| = 1\}$$

  - Therefore:

$$\begin{aligned} X(z) &= \frac{1}{2}z\left[\frac{1}{z - e^{j\omega_0}} + \frac{1}{z - e^{-j\omega_0}}\right] \\ &= \frac{1}{2}z\left[\frac{2z - \left(e^{j\omega_0} + e^{-j\omega_0}\right)}{z^2 - \left(e^{j\omega_0} + e^{-j\omega_0}\right)z + 1}\right] \end{aligned}$$

Exercise 1 (2)

- Finally:

$$\mathcal{Z}(\cos(\omega_0 n)u(n]) = \frac{z(z-\cos\omega_0)}{z^2 - 2z\cos\omega_0 + 1} \quad ; \quad |z| > 1$$

- Find the z-transform and the region of convergence of $x[n] = \sin(\omega_0 n)u[n]$.

$$\begin{aligned}
X(z) &= \frac{1}{2j}\left[\mathcal{Z}\left((e^{j\omega_0})^n u[n]\right) - \mathcal{Z}\left((e^{-j\omega_0})^n u[n]\right)\right] \\
&= \frac{1}{2j} z \left[\frac{1}{z - e^{j\omega_0}} - \frac{1}{z - e^{-j\omega_0}}\right] \\
&= \frac{1}{2j} z \left[\frac{e^{j\omega_0} - e^{-j\omega_0}}{z^2 - \left(e^{j\omega_0} + e^{-j\omega_0}\right) z + 1}\right] \\
&= \frac{z\sin\omega_0}{z^2 - 2z\cos\omega_0 + 1} \quad ; \quad |z| > 1
\end{aligned}$$

Exercise 2 (a)

- Find the z-transform of $x[n] = \alpha^n u[n-1]$.
  - *First Method*: $x[n]$ can be written as:

$$
\begin{aligned}
x[n] &= \alpha\alpha^{n-1}u[n-1] \\
\Rightarrow \quad X(z) &= \alpha\mathcal{Z}\left[\alpha^{n-1}u[n-1]\right] \\
&= \alpha z^{-1}\mathcal{Z}\left[\alpha^n u[n]\right] \\
&= \alpha z^{-1}\frac{z}{z-\alpha} = \frac{\alpha}{z-\alpha}
\end{aligned}
$$

  - *Second Method*: $x[n]$ can be written as:

$$
\begin{aligned}
x[n] &= \alpha^n\left[u[n] - \delta[n]\right] \\
&= \alpha^n u[n] - \alpha^n\delta[n] \\
&= \alpha^n u[n] - \alpha^0\delta[n] \\
&= \alpha^n u[n] - \delta[n] \\
\Rightarrow \quad X(z) &= \frac{z}{z-\alpha} - 1 = \frac{\alpha}{z-\alpha}
\end{aligned}
$$

Exercise 2 (b)

- Find the z-transform of $x[n] = (-2)^n(n-1)u[n-1]$.
  - $x[n]$ can be written as:

$$
\begin{aligned}
x[n] &= -2(-2)^{n-1}(n-1)u[n-1] \\
\Rightarrow \quad X(z) &= -2\mathcal{Z}\left[(-2)^{n-1}(n-1)u[n-1]\right] \\
&= -2z^{-1}\mathcal{Z}\left[(-2)^n nu[n]\right] \\
&= -2z^{-1}\frac{-2z}{(z+2)^2} = \frac{4}{(z+2)^2}
\end{aligned}
$$

where the z-transform of $n(-2)^n u[n]$ is $\frac{-2z}{(z+2)^2}$ following from:

$$
n\alpha^n u[n] \leftrightarrow \frac{\alpha z}{(z-\alpha)^2}
$$

Exercise 2 (c)

- Find the z-transform of $x[n] = \begin{cases} n, & n < 10; \\ 10, & n \geq 10. \end{cases}$.
  - The DT signal is plotted in the figure below:

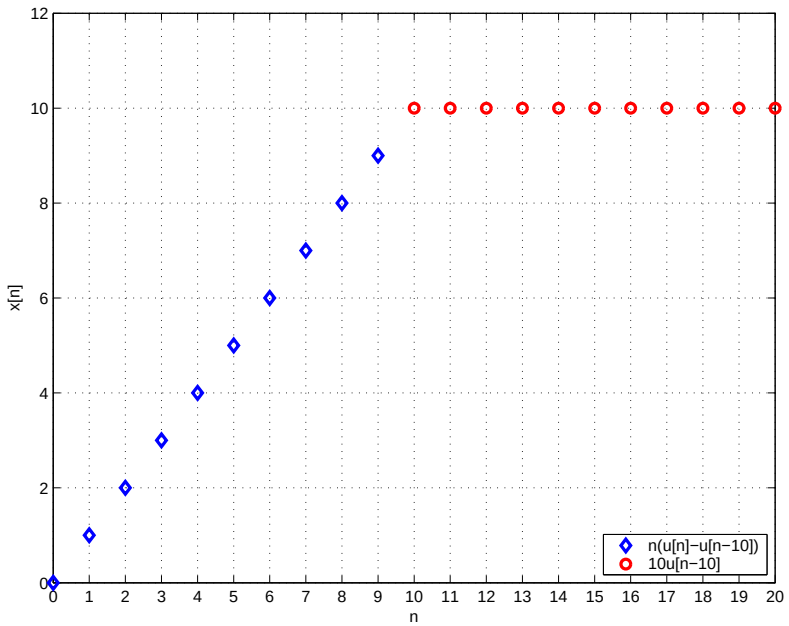

  - $x[n]$ can be written as:

$$\begin{aligned} x[n] &= n\left(u[n] - u[n-10]\right) + 10u[n-10] \\ &= nu[n] - (n-10)u[n-10] \end{aligned}$$

$$\Rightarrow \quad X(z) = \frac{z}{(z-1)^2} - z^{-10}\frac{z}{(z-1)^2} = \frac{z^{10}-1}{z^9(z-1)^2}$$

Exercise 2 (d)

- Find the z-transform of $x[n] = \left(\frac{1}{2}\right)^n \delta[n-1] + \left(\frac{1}{3}\right)^{n-1} \delta[n-2]$.
  - $x[n]$ can be written as:

$$x[n] = \left[\left(\frac{1}{2}\right)^n\right]_{n=1} \delta[n-1] + \left[\left(\frac{1}{3}\right)^{n-1}\right]_{n=2} \delta[n-2]$$
$$= \frac{1}{2}\delta[n-1] + \frac{1}{3}\delta[n-2]$$

implying that:

$$X(z) = \frac{1}{2}z^{-1} + \frac{1}{3}z^{-2} = \frac{1}{2z} + \frac{1}{3z^2} = \frac{3z+2}{6z^2}$$

Exercise 2 (e.1)

- Find the z-transform of $x[n] = 3^n(n-2)u[n-1]$.
  - *First Method*: $x[n]$ can be written as:

$$\begin{aligned} x[n] &= 3^n((n-1)-1)u[n-1] \\ &= 3^n(n-1)u[n-1] - 3^n u[n-1] \\ &= 3(3)^{n-1}(n-1)u[n-1] - 3(3)^{n-1}u[n-1] \end{aligned}$$

implying that:

$$\begin{aligned} X(z) &= 3z^{-1}\mathcal{Z}\left[n3^n u[n]\right] - 3z^{-1}\mathcal{Z}\left[3^n u[n]\right] \\ &= 3z^{-1}\frac{3z}{(z-3)^2} - 3z^{-1}\frac{z}{z-3} \\ &= \frac{9}{(z-3)^2} - \frac{3}{z-3} = \frac{18-3z}{(z-3)^2} \end{aligned}$$

Exercise 2 (e.2)

- *Second Method*:
  - $x[n]$ can be written as:

$$\begin{aligned} x[n] &= 3^n(n-2)\left(u[n]-\delta[n]\right) \\ &= 3^n n u[n] - 2(3)^n u[n] - 3^n(n-2)\delta[n] \\ &= 3^n n u[n] - 2(3)^n u[n] - \left[3^n(n-2)\right]_{n=0}\delta[n] \\ &= 3^n n u[n] - 2(3)^n u[n] + 2\delta[n] \end{aligned}$$

implying that:

$$X(z) = \frac{3z}{(z-3)^2} - 2\frac{z}{z-3} + 2 = \frac{18-3z}{(z-3)^2}$$

Exercise 2 (f.1)

- Find the z-transform of $x[n] = \begin{cases} 2, & 0 \leq n < 2; \\ n, & 2 \leq n < 5; \\ 5, & n \geq 5. \end{cases}$.
  - The DT signal is plotted in the figure below:

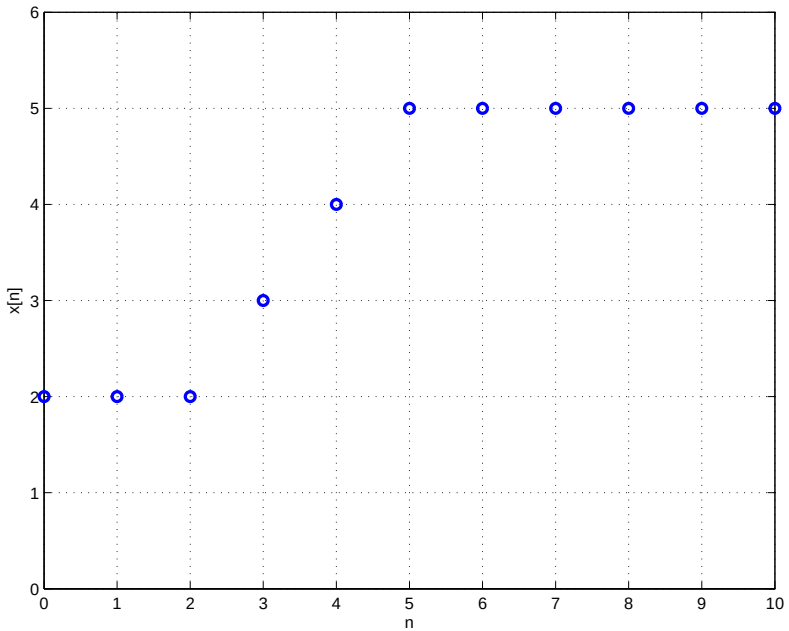

  - $x[n]$ can be written as:

$$x[n] = 2u[n] + (n-2)u[n-2] + (5-n)u[n-5]$$

Exercise 2 (f.2)

- In order to check the above result:
  - For $0 \leq n < 2$: $u[n] = 1$, $u[n-2] = 0$ and $u[n-5] = 0$ implying that $x[n] = 2$.
  - $2 \leq n < 5$: $u[n] = 1$, $u[n-2] = 1$ and $u[n-5] = 0$ implying that $x[n] = 2 + n - 2 = n$.
  - $n \geq 5$: $u[n] = 1$, $u[n-2] = 1$ and $u[n-5] = 1$ implying that $x[n] = 2 + n - 2 + 5 - n = 5$.
- The z-transform of $x[n]$ is given by:

$$
\begin{aligned}
X(z) &= 2\mathcal{Z}\left[u[n]\right] + z^{-2}\mathcal{Z}\left[nu[n]\right] - z^{-5}\mathcal{Z}\left[nu[n]\right] \\
&= 2\frac{z}{z-1} + z^{-2}\frac{z}{(z-1)^2} - z^{-5}\frac{z}{(z-1)^2} \\
&= \frac{2z}{z-1} + \frac{1}{z(z-1)^2} - \frac{1}{z^4(z-1)^2} \\
&= \frac{2z^6 - 2z^5 + z^3 - 1}{z^4(z-1)^2}
\end{aligned}
$$

Exercise 3 (1)

Find $x[n]$ for $X(z) = \frac{1-z^{-1}}{(1+z^{-1})(1+\frac{1}{2}z^{-1})}$.

- $X(z)$ can be written as:

$$X(z) = \frac{z(z-1)}{(z+1)(z+\frac{1}{2})}$$

- Applying the partial fraction expansion on $\frac{X(z)}{z}$:

$$\frac{X(z)}{z} = \frac{z-1}{(z+1)(z+\frac{1}{2})} = \frac{r_1}{z+1} + \frac{r_2}{z+\frac{1}{2}}$$

  - where:

$$r_1 = \left[\frac{z-1}{z+\frac{1}{2}}\right]_{z=-1} = 4 \;\; ; \;\; r_2 = \left[\frac{z-1}{z+1}\right]_{z=-\frac{1}{2}} = -3$$

- Therefore:

$$X(z) = 4\frac{z}{z+1} - 3\frac{z}{z+\frac{1}{2}}$$

$$\Rightarrow x[n] = \left[4(-1)^n - 3\left(-\frac{1}{2}\right)^n\right] u[n]$$

Exercise 3 (2)

Find $x[n]$ for $X(z) = \frac{z^{-3}}{1-\frac{1}{4}z^{-1}}$.

- $X(z)$ can be written as:

$$X(z) = z^{-3}\frac{z}{z-\frac{1}{4}}$$

$$\Rightarrow x[n] = \left(\frac{1}{4}\right)^{n-3} u[n-3]$$

Find $x[n]$ for $X(z) = \frac{z+3}{z^7(z-\frac{1}{2})}$.

- $X(z)$ can be written as:

$$X(z) = z^{-7}\frac{z+3}{z-\frac{1}{2}} = z^{-7}\left[\frac{z}{z-\frac{1}{2}} + \frac{3}{z-\frac{1}{2}}\right]$$

$$= z^{-7}\frac{z}{z-\frac{1}{2}} + z^{-8}\frac{3z}{z-\frac{1}{2}}$$

$$\Rightarrow x[n] = \left(\frac{1}{2}\right)^{n-7} u[n-7] + 3\left(\frac{1}{2}\right)^{n-8} u[n-8]$$

Exercise 4

Determine the values of a for which $y[n] = x[n] + e^a y[n-1]$ is stable.

- Taking the z-transform of $y[n] = x[n] + e^a y[n-1]$:

$$Y(z) = X(z) + e^a z^{-1} Y(z)$$

- The transfer function is given by:

$$H(z) = \frac{Y(z)}{X(z)} = \frac{1}{1 - e^a z^{-1}} = \frac{z}{z - e^a}$$

- The pole of the transfer function is at $z = e^a$.
- The system is stable when this pole is inside the unit circle:

$$e^a < 1 \quad \Rightarrow \quad a < 0$$

Exercise 5 (1)

Determine the impulse response of
$y[n] = 0.2x[n] - 0.5x[n-2] + 0.4x[n-3]$.

- Taking the z-transform of both sides:

$$Y(z) = 0.2X(z) - 0.5z^{-2}X(z) + 0.4z^{-3}X(z)$$
$$\Rightarrow H(z) = \frac{Y(z)}{X(z)} = 0.2 - 0.5z^{-2} + 0.4z^{-3}$$

- Consequently, the impulse response is given by:

$$h[n] = 0.2\delta[n] - 0.5\delta[n-2] + 0.4\delta[n-3]$$

- Note also that the impulse response corresponds to the response of the system when the input is $x[n] = \delta[n]$. Consequently, replacing $x[n]$ by $\delta[n]$ in the input-output relation results in:

$$h[n] = 0.2\delta[n] - 0.5\delta[n-2] + 0.4\delta[n-3]$$

Exercise 5 (2)

Given that the input sequence $\{-1, 1, 0, -1\}$ is applied to this system, determine the corresponding output sequence.

- The z-transform of the input sequence $x[n] = \{-1, 1, 0, -1\}$ is given by:

$$X(z) = -1 + z^{-1} - z^{-3}$$

- Consequently:

$$\begin{aligned} Y(z) = H(z)X(z) &= \left(0.2 - 0.5z^{-2} + 0.4z^{-3}\right)\left(-1 + z^{-1} - z^{-3}\right) \\ &= \cdots \\ &= -0.2 + 0.2z^{-1} + 0.5z^{-2} - 1.1z^{-3} + 0.4z^{-4} + 0.5z^{-5} - 0.4z^{-6} \end{aligned}$$

- Taking the inverse z-transform, we get the output sequence:

$$y[n] = \{-0.2, 0.2, 0.5, -1.1, 0.4, 0.5, -0.4\}$$

Exercise 6 (1)

Find and plot the amplitude and phase responses of the system characterized by the following difference equation:

$$y[n] = \frac{1}{6}x[n] + \frac{1}{3}x[n-1] + \frac{1}{6}x[n-2]$$

- Taking the z-transform:

$$Y(z) = \frac{1}{6}X(z) + \frac{1}{3}z^{-1}X(z) + \frac{1}{6}z^{-2}X(z)$$

$$\Rightarrow H(z) = \frac{Y(z)}{X(z)} = \frac{1}{6} + \frac{1}{3}z^{-1} + \frac{1}{6}z^{-2}$$

- The frequency response is given by:

$$\begin{aligned} H(e^{j\omega}) &= \frac{1}{6}\left[1 + 2e^{-j\omega} + e^{-2j\omega}\right] \\ &= \frac{1}{6}e^{-j\omega}\left[e^{j\omega} + 2 + e^{-j\omega}\right] \\ &= \frac{1}{6}e^{-j\omega}\left[2 + 2\cos\omega\right] = \frac{1}{3}(1 + \cos\omega)e^{-j\omega} \end{aligned}$$

Exercise 6 (2)

$$H(e^{j\omega}) = \frac{1}{3}(1 + \cos\omega)e^{-j\omega}$$

- The magnitude response is given by:

$$\left|H(e^{j\omega})\right| = \frac{1}{3}\left|(1 + \cos\omega)\right| = \frac{1}{3}(1 + \cos\omega)$$

  since $(1 + \cos\omega) \geq 0$.
- The phase response is given by:

$$\arg\left[H(e^{j\omega})\right] = -\omega$$

- The magnitude and phase responses can be plotted in the interval $[0 \;\; \pi]$. The responses in $[\pi \;\; 2\pi]$ can be deduced by symmetry.

Exercise 6 (3)

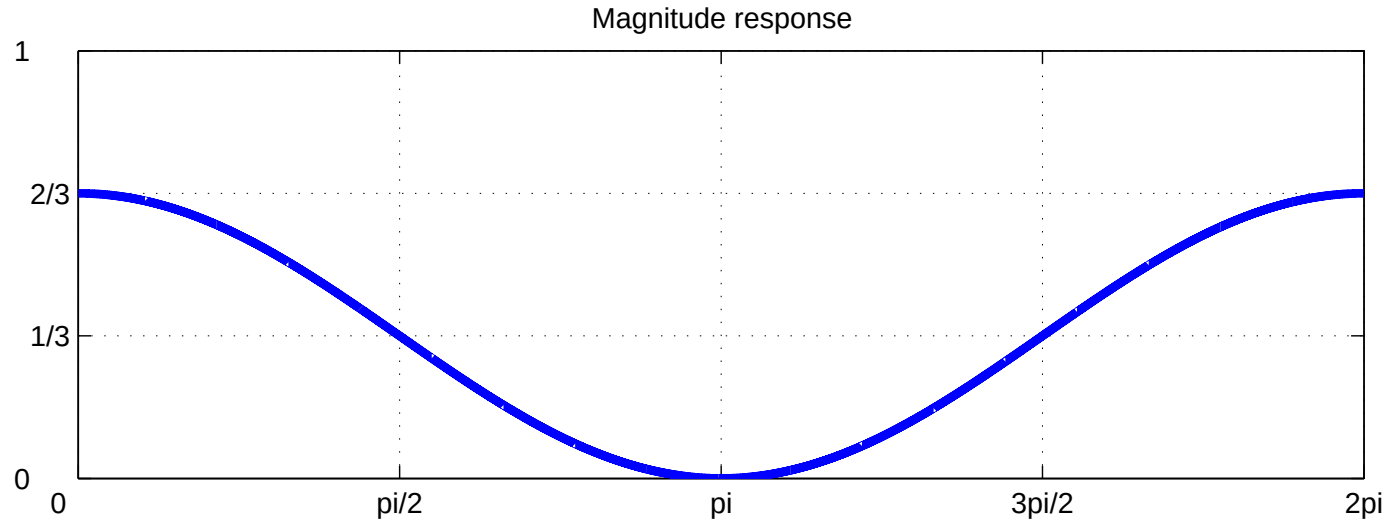
Magnitude response
1
2/3
1/3
0
0
pi/2
pi
3pi/2
2pi

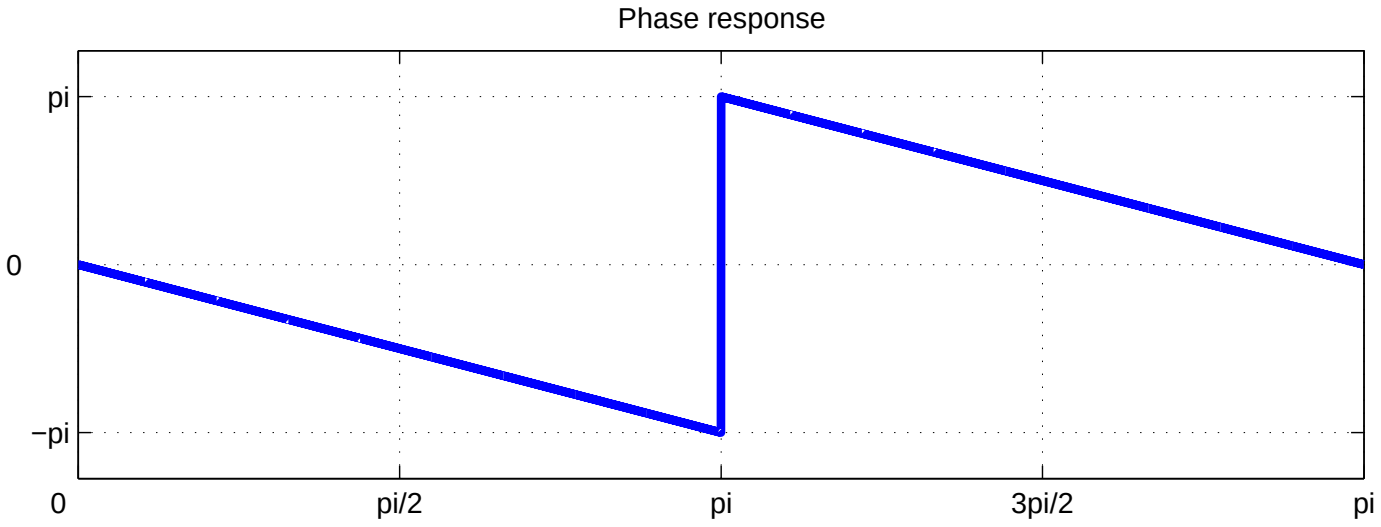
Phase response
pi
0
−pi
0
pi/2
pi
3pi/2
pi

Exercise 7 (1)

Draw a block diagram of: $y[n] - y[n-1] = x[n] + x[n-1]$.

- The output of the system verifies the relation:

$$y[n] = x[n] + x[n-1] + y[n-1]$$

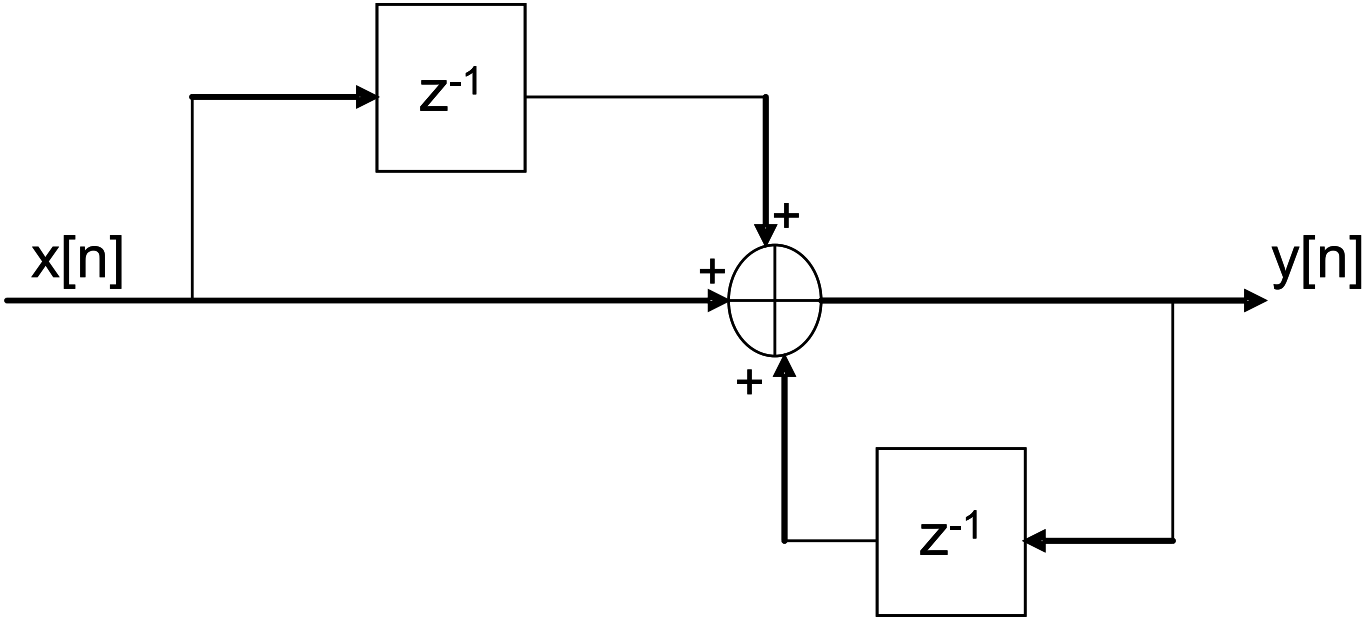

Exercise 7 (2)

Determine the impulse response of this system and test its stability.

- Taking the z-transform:

$$Y(z) - z^{-1}Y(z) = X(z) + z^{-1}X(z)$$
$$\Rightarrow H(z) = \frac{Y(z)}{X(z)} = \frac{1 + z^{-1}}{1 - z^{-1}} = \frac{z+1}{z-1}$$

- $H(z)$ can be written as:

$$H(z) = \frac{z}{z-1} + \frac{1}{z-1} = \frac{z}{z-1} + z^{-1}\frac{z}{z-1}$$

- Consequently, the impulse response is given by:

$$h[n] = u[n] + u[n-1]$$

- The system has one pole at $z = 1$. Therefore, it is unstable.

Exercise 7 (3)

Determine the response of this system to the unit step sequence.

- When $x[n] = u[n]$, the z-transform of the output is given by:

$$Y(z) = X(z)H(z) = \frac{z}{z-1}\frac{z+1}{z-1} = \frac{z(z+1)}{(z-1)^2}$$

- Applying the partial fraction expansion:

$$\frac{Y(z)}{z} = \frac{(z+1)}{(z-1)^2} = \frac{r_1}{(z-1)^2} + \frac{r_2}{z-1}$$

where:

- r_1 is given by:

$$r_1 = [z+1]_{z=1} = 2$$

- For $z = -1$:

$$0 = \frac{r_1}{4} - \frac{r_2}{2} \quad \Rightarrow \quad r_2 = \frac{r_1}{2} = 1$$

Exercise 7 (4)

- Consequently:

$$Y(z) = 2\frac{z}{(z-1)^2} + \frac{z}{z-1}$$

- Applying the z-domain differentiation property:

$$\begin{aligned}\mathcal{Z}\left(nu(n]\right) &= -z\frac{\mathrm{d}\mathcal{Z}\left(u[n]\right)}{\mathrm{d}z} \\ &= -z\frac{\mathrm{d}}{\mathrm{d}z}\left[\frac{z}{z-1}\right] \\ &= \frac{z}{(z-1)^2}\end{aligned}$$

- Therefore:

$$y[n] = (2n+1)u[n]$$

Exercise 7 (5)

Determine the steady-state response to $x[n] = 10\cos\left(\frac{\pi}{2}n + \frac{\pi}{6}\right)u[n]$.

- The frequency response is given by:

$$H(e^{j\omega}) = \frac{e^{j\omega}+1}{e^{j\omega}-1} = \frac{e^{j\frac{\omega}{2}}\left[e^{j\frac{\omega}{2}}+e^{-j\frac{\omega}{2}}\right]}{e^{j\frac{\omega}{2}}\left[e^{j\frac{\omega}{2}}-e^{-j\frac{\omega}{2}}\right]}$$

$$= \frac{2\cos\left(\frac{\omega}{2}\right)}{2j\sin\left(\frac{\omega}{2}\right)} = \frac{1}{j}\frac{1}{\tan\left(\frac{\omega}{2}\right)}$$

- For $\omega = \frac{\pi}{2}$:

$$H(e^{j\frac{\pi}{2}}) = \frac{1}{j}\frac{1}{\tan\left(\frac{\pi}{4}\right)} = -j = e^{-j\frac{\pi}{2}}$$

- The output sequence is given by:

$$y[n] = 10\left|H(e^{j\frac{\pi}{2}})\right|\cos\left(\frac{\pi}{2}n + \frac{\pi}{6} + \arg\left[H(e^{j\frac{\pi}{2}})\right]\right)u[n]$$

$$= 10\cos\left(\frac{\pi}{2}n + \frac{\pi}{6} - \frac{\pi}{2}\right)u[n] = 10\cos\left(\frac{\pi}{2}n - \frac{\pi}{3}\right)u[n]$$

Exercise 8

- The input can be written as: $x(t) = u(t)$. Consequently:

$$Y(s) = X(s)\frac{5}{s+5} = \frac{1}{s}\frac{5}{s+5}$$

- Applying the partial fraction expansion:

$$Y(s) = \frac{1}{s} - \frac{1}{s+5} \quad \Rightarrow \quad y(t) = \left[1 - e^{-5t}\right] u(t)$$

- On the other hand:

$$f_s = 10 \text{ Hz} \quad \Rightarrow \quad T_s = 0.1 \text{ s}$$

- Consequently:

$$y(nT_s) = \left[1 - e^{-5(nT_s)}\right] u(nT_s) = 1 - e^{-0.5n}$$

  - Note that $u(nT_s) = u(0.1n) = 1$ for $n \geq 0$.

- The first 4 samples are given by:

$$y[0] = 1 - e^{-0} = 0 \quad ; \quad y[1] = 1 - e^{-0.5} = 0.393$$

$$y[2] = 1 - e^{-1} = 0.632 \quad ; \quad y[3] = 1 - e^{-1.5} = 0.777$$

Exercise 9

- In the z-domain:

$$Y(z) = H(z)E(z) = H(z)\left[X(z) - KY(z)\right]$$
$$\Rightarrow \frac{Y(z)}{X(z)} = \frac{H(z)}{1 + KH(z)} = \frac{\frac{z}{z-1.25}}{1 + K\frac{z}{z-1.25}} = \frac{z}{(1+K)z - 1.25}$$

- The pole of the system is given by:

$$p_1 = \frac{1.25}{1+K}$$

- For the above system to be stable:

$$|p_1| < 1 \;\Rightarrow\; \frac{1.25}{1+K} < 1 \;\; (\text{since } K \text{ is positive})$$
$$\Rightarrow\; 1 + K > 1.25 \;\Rightarrow\; K > 0.25$$

Consequently, K must satisfy the relation: $K > 0.25$.

Exercise 10

- $y[n]$ can be written as:

$$y[n] = x[n] + 0.5x[n-1] + 0.25x[n-2] + 0.125x[n-3] + 0.0625x[n-4]$$

  Note that the current output depends only on the current and previous inputs.

- For $n = 2$:

$$y[2] = x[2] + 0.5x[1] + 0.25x[0] + 0.125x[-1] + 0.0625x[-2]$$

- On the other hand:

$$x[2] = 120\sin(3\pi)u[2] = 120\sin(3\pi) = 0$$
$$x[1] = 120\sin\left(\frac{3}{2}\pi\right)u[1] = 120\sin\left(\frac{3}{2}\pi\right) = -120$$
$$x[0] = 120\sin(0)u[0] = 120\sin(0) = 0$$
$$x[-1] = x[-2] = 0 \quad \text{since} \quad u[-1] = u[-2] = 0$$

  Consequently:

$$y[2] = -60$$