QUESTION 1: CALCULATED NUMERIC

10 out of 10 points

The sequence $x[n] = n\left(\frac{1}{3}\right)^n u[n] + 4\delta[n-2]$ is applied to the input of a system whose impulse response is h[n]=u[n-1]. What is the final value of the output sequence y[n]?

Given Answer: 4.75

Correct Answer: 4.75

Answer range +/- 0 (4.75 - 4.75)

QUESTION 2: MULTIPLE CHOICE

10 out of 10 points

Consider the DT sequences given by x[n]={-3,-2,-1,3,1} and y[n]={-3,1,-2,2,3}. Let z[n]=x[n]*y[n]. What is the value of z[2]?

Given Answer: 7

Correct Answer: 7

QUESTION 3: MULTIPLE CHOICE

10 out of 10 points

Consider a DT system whose transfer function is given by: $H(z) = \dfrac{(z-2)(z-3)}{z^2+2z}$. Which one of the below figures corresponds to the block diagram of this system?

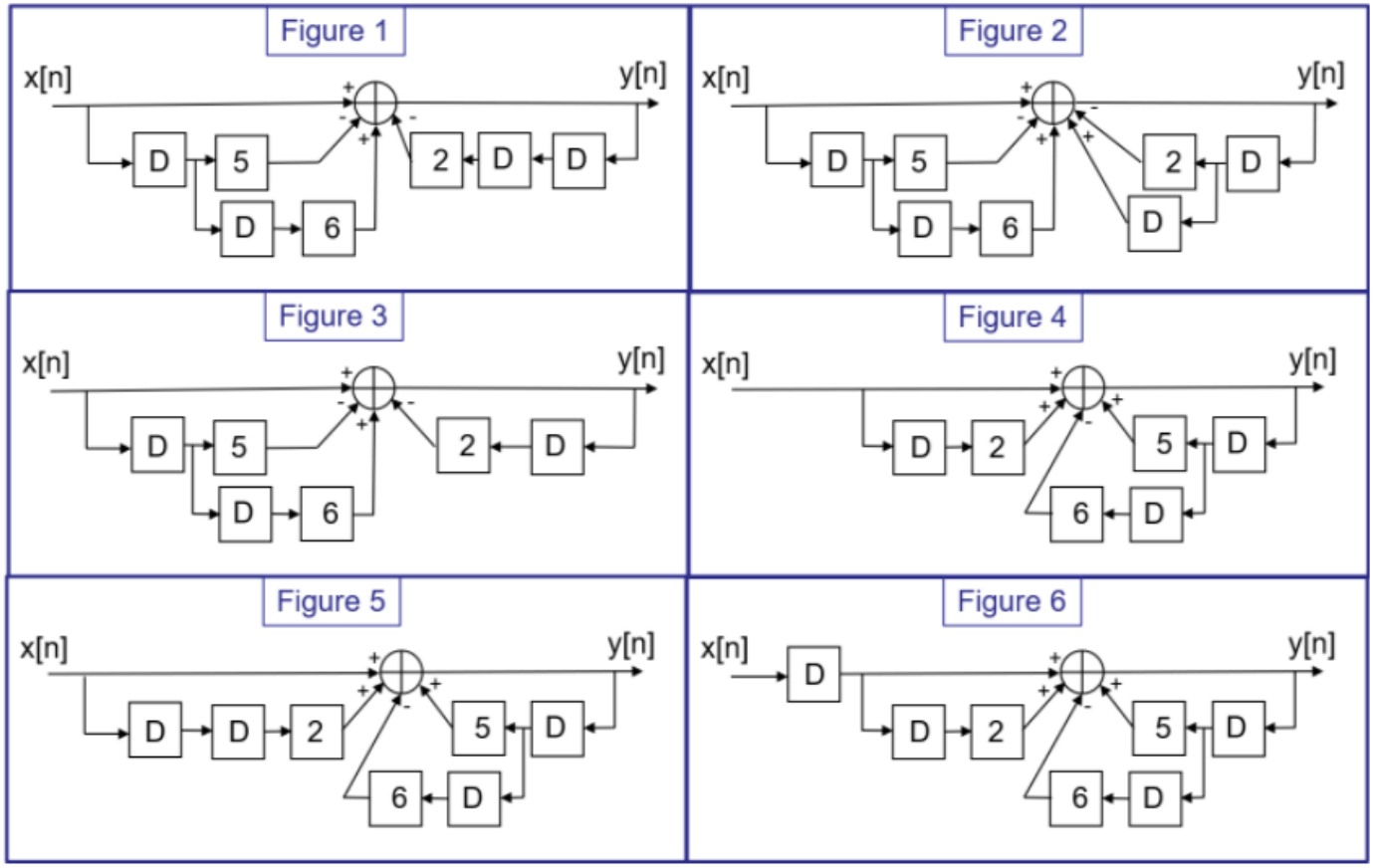

Given Answer: Figure 3

Correct Answer: Figure 3

QUESTION 4: MULTIPLE CHOICE

10 out of 10 points

Consider the sequence given by:

$$x[n] = \begin{cases} 2^n & n < 2 \\ 8 & n \geq 2 \end{cases}.$$

If the z-transform of this sequence can be written under the form:

$$X(z) = a \times \frac{z}{z-2} + \left[b \times \frac{z}{z-1} - c \times \frac{z}{z-2} \right] z^{-2}$$

which row of the below table contains the correct values of the constants a, b and c?

Row #	a	b	c
Row 1	1	4	4
Row 2	1	4	8
Row 3	1	4	16
Row 4	1	8	4
Row 5	1	8	8
Row 6	1	8	16
Row 7	2	4	4
Row 8	2	4	8
Row 9	2	4	16
Row 10	2	8	4
Row 11	2	8	8
Row 12	2	8	16

Given Answer: Row 4

Correct Answer: Row 4

QUESTION 5: MULTIPLE CHOICE

10 out of 10 points

Consider the LTI DT system that is described by the following difference equation: $y[n] = -\frac{5}{4}y[n-1] - \frac{1}{4}y[n-2] + 2x[n-2] + \frac{1}{8}x[n-3]$. What are the system characteristics?

Given Answer: Causal and Not Stable

Correct Answer: Causal and Not Stable

QUESTION 6: CALCULATED NUMERIC

10 out of 10 points

Consider the DT system shown below:

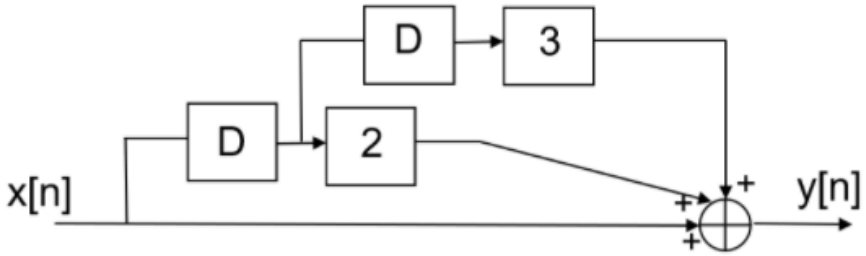

If the input sequence is given by $x[n] = 3^n u[n] + \delta[n]$, what is the value of y[2]?

Given Answer: 21

Correct Answer: 21

Answer range +/- 0 (21 - 21)

QUESTION 7: MULTIPLE CHOICE

10 out of 10 points

Consider a DT system whose transfer function is given by $H(z)=1+z^2$. Which one of the below figures corresponds to the magnitude of the frequency response $|H(e^{j\omega})|$?

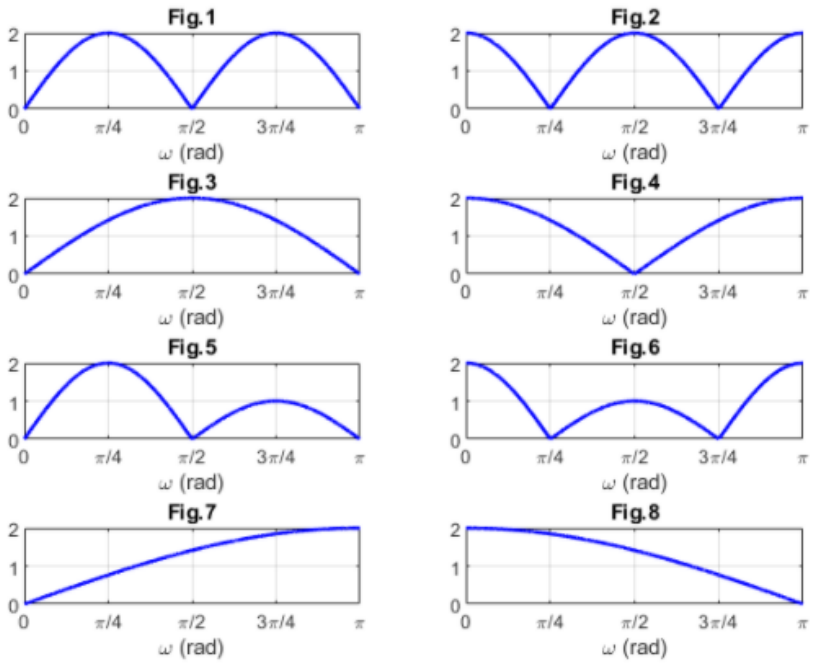

Given Answer: Fig. 4

Correct Answer: Fig. 4

QUESTION 8: MULTIPLE CHOICE

10 out of 10 points

Let w[n]=x[n]*y[n] where x[n]=3^nu[n] and y[n]=2^nu[n]. If w[n] can be written as: $w[n]=(a\times 3^n+b\times 2^n)u[n]$, which row of the below table contains the correct values of the constants a and b?

Row #	a	b
Row 1	-1	2
Row 2	2	-1
Row 3	-2	3
Row 4	3	-2
Row 5	-2	4
Row 6	4	-2
Row 7	-3	4
Row 8	4	-3
Row 9	-3	5
Row 10	5	-3
Row 11	-4	5
Row 12	5	-4

Given Answer: Row 4

Correct Answer: Row 4

QUESTION 9: CALCULATED NUMERIC

5 out of 5 points

Consider a LTI DT system with the following frequency response:

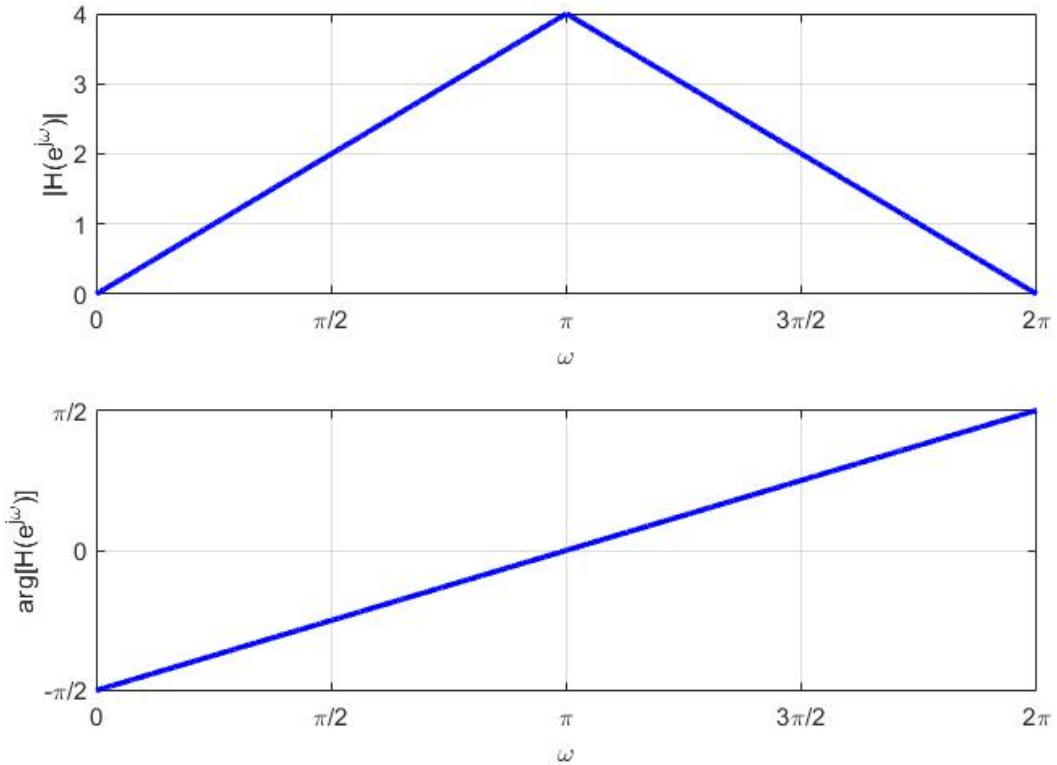

If the input signal is given by $x[n] = 4\cos\left(\frac{\pi}{2}n + \frac{\pi}{8}\right)u[n]$ and the output signal is given by $y[n] = A\cos\left(\frac{\pi}{2}n + B\right)u[n]$, what is the value of the constant A?

Given Answer: 8

Correct Answer: 8

Answer range +/- 0 (8 - 8)

QUESTION 10: CALCULATED NUMERIC

10 out of 10 points

Consider the feedback system shown in the figure below:

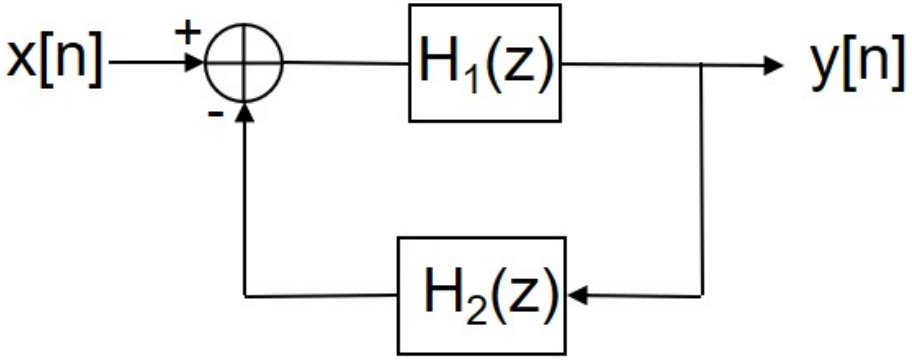

If $H_1(z)=z/(z-4)$ and $H_2(z)=a$, above which value of the positive number a will the system become stable?

Given Answer: 3

Correct Answer: 3

Answer range +/- 0 (3 - 3)

QUESTION 11: MULTIPLE CHOICE

5 out of 5 points

The sequence $x[n] = 4^n u[n] - 4^n u[n-2]$ can be written as $x[n] = a \times \delta[n] + b \times \delta[n-1] + c \times \delta[n-2]$. Which row of the below table contains the correct values of the constants a, b and c?

Row #	a	b	c
Row 1	1	2	0
Row 2	1	4	0
Row 3	2	4	0
Row 4	4	4	0
Row 5	4	8	0
Row 6	4	16	0
Row 7	2	2	2
Row 8	2	4	2
Row 9	4	4	2
Row 10	1	4	4
Row 11	2	4	4
Row 12	4	4	4

Given Answer: Row 2

Correct Answer: Row 2