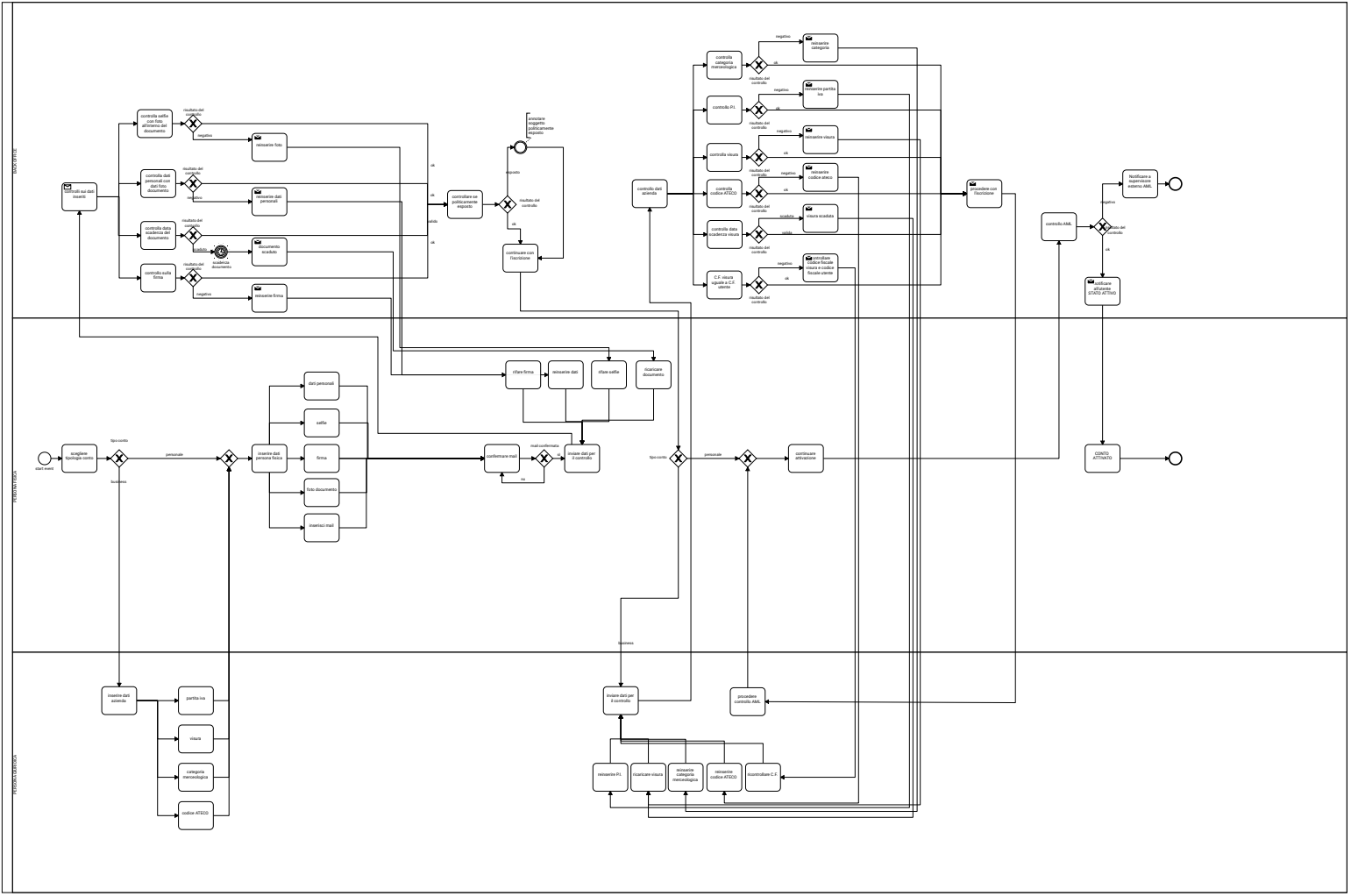ProcessoVerificaClientela