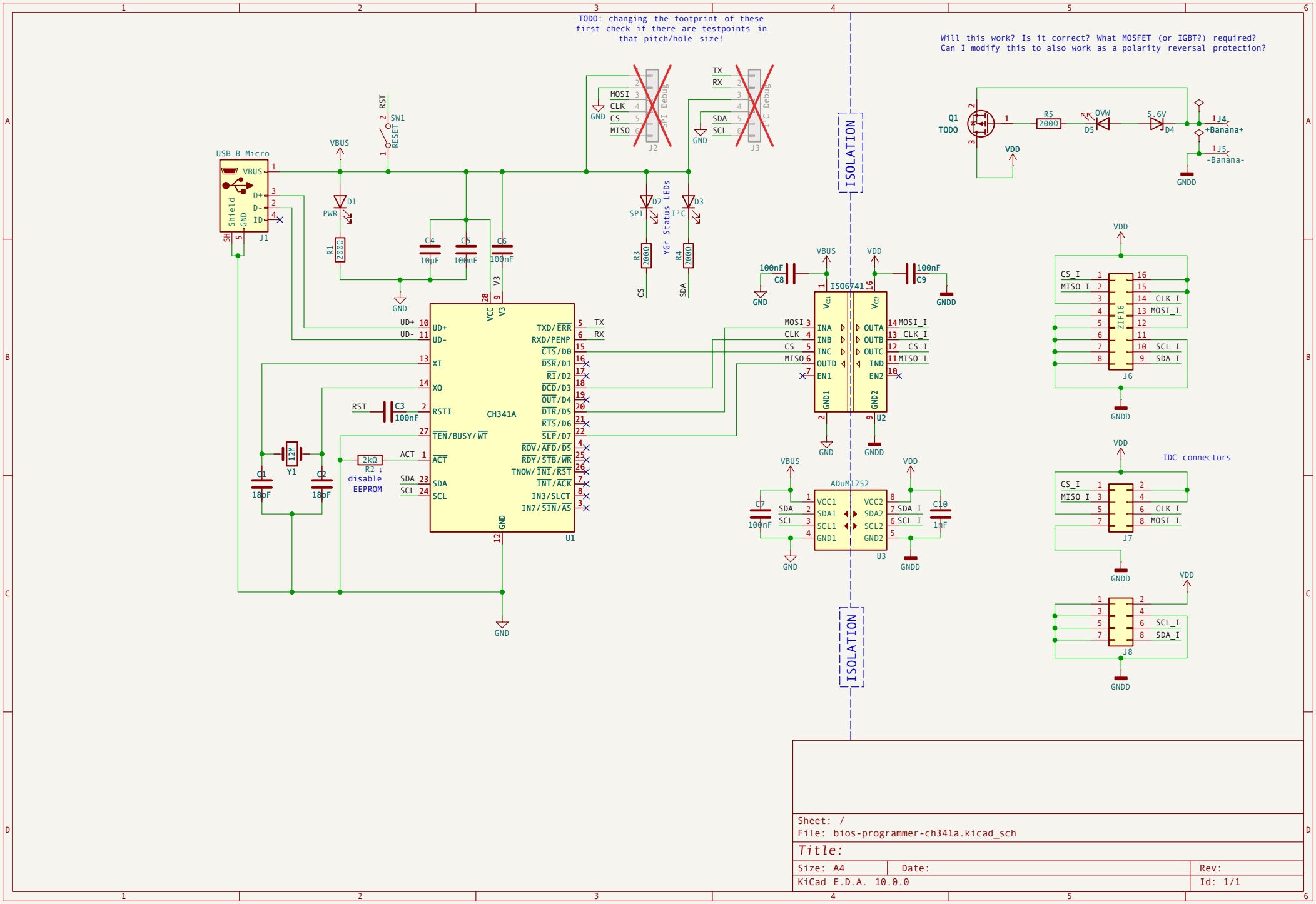

Sheet: /
File: bios-programmer-ch341a.kicad_sch

Title:

Size: A4	Date:	Rev:
KiCad E.D.A. 10.0.0		Id: 1/1