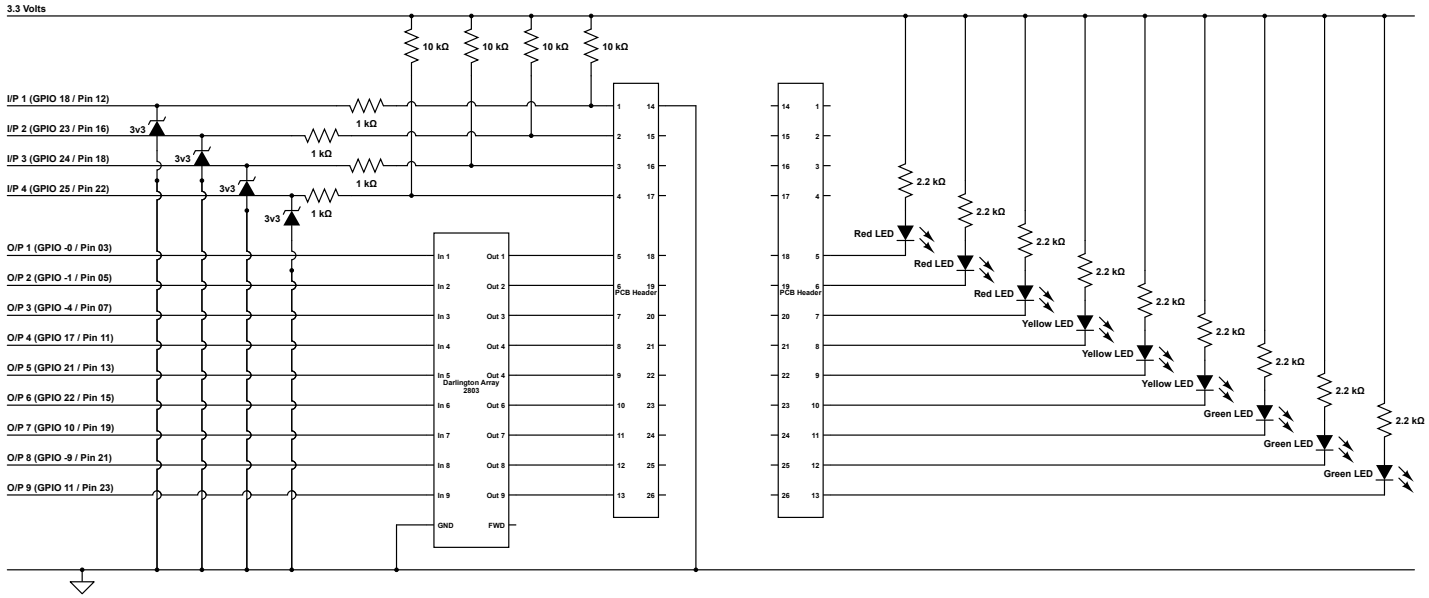
3.3 Volts
10 kΩ
10 kΩ
10 kΩ
10 kΩ
I/P 1 (GPIO 18 / Pin 12)
I/P 2 (GPIO 23 / Pin 16)
I/P 3 (GPIO 24 / Pin 18)
I/P 4 (GPIO 25 / Pin 22)
3v3
1 kΩ
O/P 1 (GPIO -0 / Pin 03)
O/P 2 (GPIO -1 / Pin 05)
O/P 3 (GPIO -4 / Pin 07)
O/P 4 (GPIO 17 / Pin 11)
O/P 5 (GPIO 21 / Pin 13)
O/P 6 (GPIO 22 / Pin 15)
O/P 7 (GPIO 10 / Pin 19)
O/P 8 (GPIO -9 / Pin 21)
O/P 9 (GPIO 11 / Pin 23)
Darlington Array
2803
In 1
In 2
In 3
In 4
In 5
In 6
In 7
In 8
In 9
GND
Out 1
Out 2
Out 3
Out 4
Out 6
Out 7
Out 8
Out 9
FWD
PCB Header
2.2 kΩ
Red LED
Yellow LED
Green LED

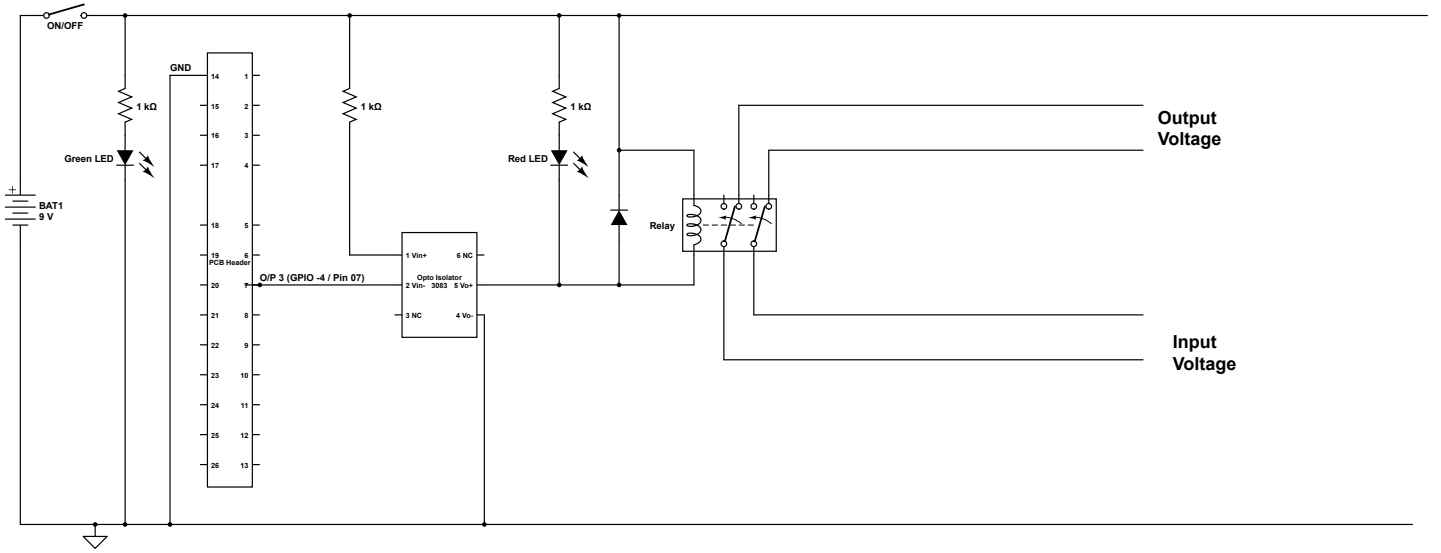
ON/OFF
1 kΩ
Green LED
BAT1
9 V
GND
PCB Header
O/P 3 (GPIO -4 / Pin 07)
Red LED
Opto Isolator
3083
1 Vin+
2 Vin-
3 NC
6 NC
5 Vo+
4 Vo-
Relay
Output
Voltage
Input
Voltage