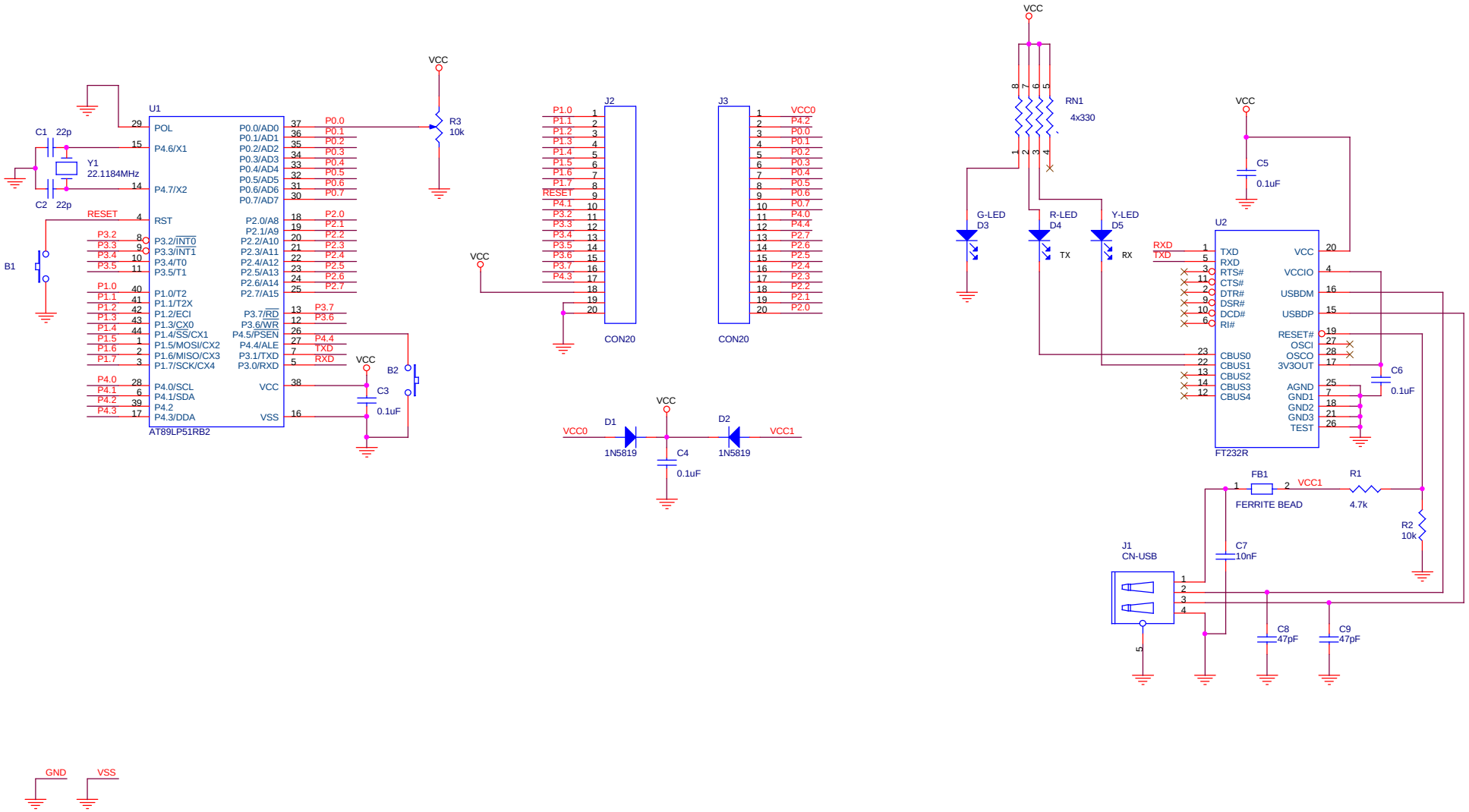

Title	Microcontroller		
Size B	Document Number 00001		Rev 1
Date: Wednesday, February 19, 2014		Sheet 1 of 1	