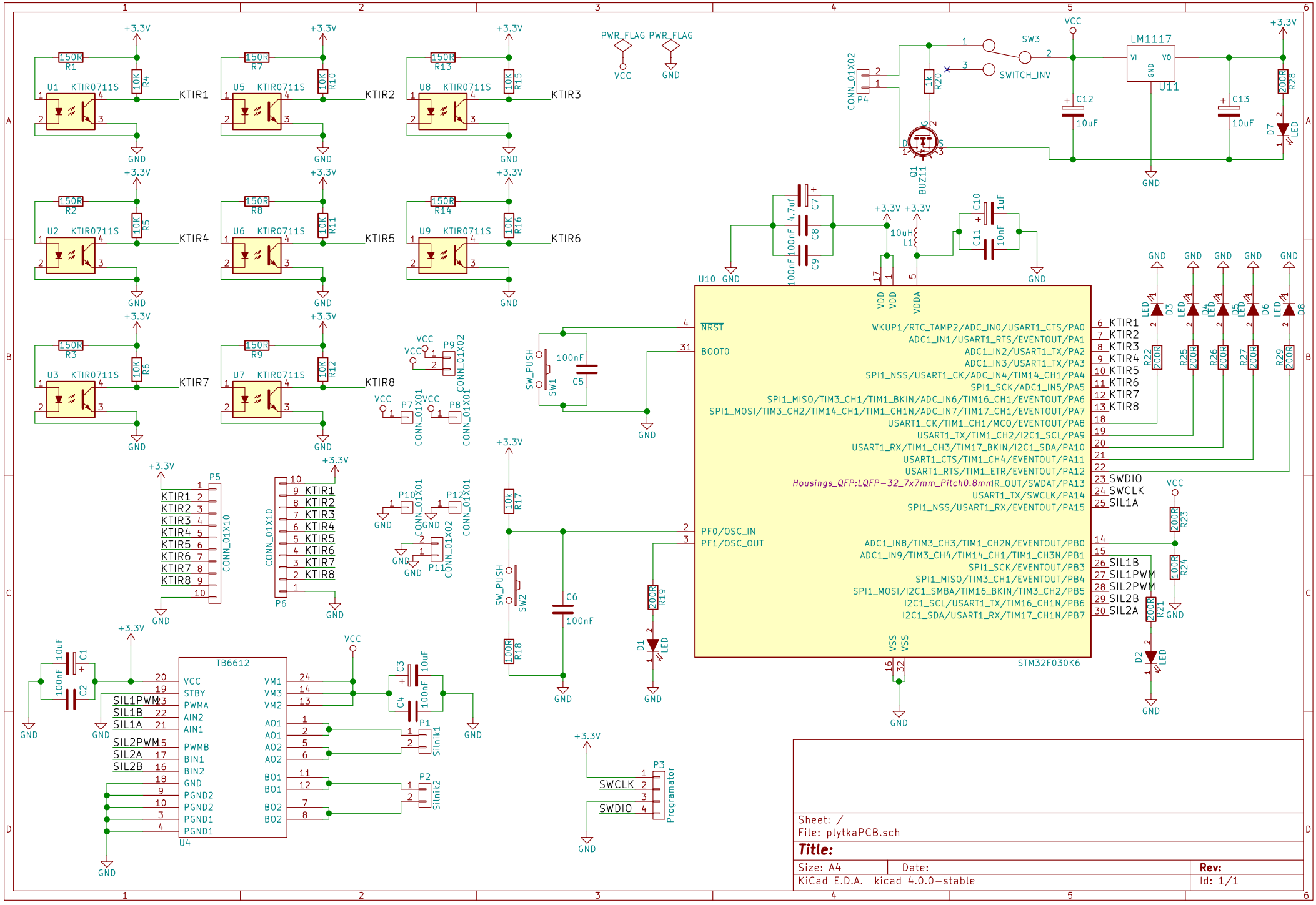
U1 KTIR0711S
U2 KTIR0711S
U3 KTIR0711S
U5 KTIR0711S
U6 KTIR0711S
U7 KTIR0711S
U8 KTIR0711S
U9 KTIR0711S
KTIR1
KTIR2
KTIR3
KTIR4
KTIR5
KTIR6
KTIR7
KTIR8
150R
10K
+3.3V
GND
PWR_FLAG
VCC
SW3
SWITCH_INV
LM1117
U11
C12
10uF
C13
10uF
D7
LED
R28
200R
CONN_01X02
P4
R20
1k
Q1
BUZ11
C7
4.7uf
C8
100nF
C9
100nF
C10
1uF
C11
10nF
10uH
L1
U10
STM32F030K6
NRST
BOOT0
VDD
VDDA
VSS
PF0/OSC_IN
PF1/OSC_OUT
WKUP1/RTC_TAMP2/ADC_IN0/USART1_CTS/PA0
ADC1_IN1/USART1_RTS/EVENTOUT/PA1
ADC1_IN2/USART1_TX/PA2
ADC1_IN3/USART1_TX/PA3
SPI1_NSS/USART1_CK/ADC_IN4/TIM14_CH1/PA4
SPI1_SCK/ADC1_IN5/PA5
SPI1_MISO/TIM3_CH1/TIM1_BKIN/ADC_IN6/TIM16_CH1/EVENTOUT/PA6
SPI1_MOSI/TIM3_CH2/TIM14_CH1/TIM1_CH1N/ADC_IN7/TIM17_CH1/EVENTOUT/PA7
USART1_CK/TIM1_CH1/MCO/EVENTOUT/PA8
USART1_TX/TIM1_CH2/I2C1_SCL/PA9
USART1_RX/TIM1_CH3/TIM17_BKIN/I2C1_SDA/PA10
USART1_CTS/TIM1_CH4/EVENTOUT/PA11
USART1_RTS/TIM1_ETR/EVENTOUT/PA12
Housings_QFP:LQFP-32_7x7mm_Pitch0.8mm
IR_OUT/SWDAT/PA13
USART1_TX/SWCLK/PA14
SPI1_NSS/USART1_RX/EVENTOUT/PA15
ADC1_IN8/TIM3_CH3/TIM1_CH2N/EVENTOUT/PB0
ADC1_IN9/TIM3_CH4/TIM14_CH1/TIM1_CH3N/PB1
SPI1_SCK/EVENTOUT/PB3
SPI1_MISO/TIM3_CH1/EVENTOUT/PB4
SPI1_MOSI/I2C1_SMBA/TIM16_BKIN/TIM3_CH2/PB5
I2C1_SCL/USART1_TX/TIM16_CH1N/PB6
I2C1_SDA/USART1_RX/TIM17_CH1N/PB7
SWDIO
SWCLK
SIL1A
SIL1B
SIL1PWM
SIL2PWM
SIL2B
SIL2A
LED
D3
D4
D5
D6
D8
R22
R25
R26
R27
R29
R23
R24
R21
D2
SW_PUSH
SW1
SW2
C5
C6
R17
R18
R19
D1
P5
P6
CONN_01X10
P7
P8
P9
P10
P11
P12
CONN_01X01
TB6612
U4
VCC
STBY
PWMA
AIN2
AIN1
PWMB
BIN1
BIN2
GND
PGND2
PGND1
VM1
VM3
VM2
AO1
AO2
BO1
BO2
C1
10uF
C2
100nF
C3
10uF
C4
100nF
P1
Slink1
P2
Slink2
P3
Programator
Sheet: /
File: plytkaPCB.sch
Title:
Size: A4
Date:
Rev:
KiCad E.D.A. kicad 4.0.0-stable
Id: 1/1