AIP Journal of Applied Physics

# Resonator-bolometer theory, microwave read out, and kinetic inductance bolometers

M. A. Lindeman

Citation: Journal of Applied Physics **116**, 024506 (2014); doi: 10.1063/1.4890018
View online: http://dx.doi.org/10.1063/1.4890018
View Table of Contents: http://scitation.aip.org/content/aip/journal/jap/116/2?ver=pdfcov
Published by the AIP Publishing

**Articles you may be interested in**

Arrays of membrane isolated yttrium-barium-copper-oxide kinetic inductance bolometers
J. Appl. Phys. **115**, 234509 (2014); 10.1063/1.4884437

Noise properties of a resonance-type spin-torque microwave detector
Appl. Phys. Lett. **99**, 032507 (2011); 10.1063/1.3612917

Low noise and wide bandwidth of NbN hot-electron bolometer mixers
Appl. Phys. Lett. **98**, 033507 (2011); 10.1063/1.3544050

Readout-power heating and hysteretic switching between thermal quasiparticle states in kinetic inductance detectors
J. Appl. Phys. **108**, 114504 (2010); 10.1063/1.3517152

Microwave Kinetic Inductance Detectors: The First Decade
AIP Conf. Proc. **1185**, 135 (2009); 10.1063/1.3292300

AIP Journal of Applied Physics

*Journal of Applied Physics* is pleased to announce **André Anders** as its new Editor-in-Chief

[This article is copyrighted as indicated in the article. Reuse of AIP content is subject to the terms at: http://scitation.aip.org/termsconditions. Downloaded to ] IP: 137.79.208.125 On: Mon, 14 Jul 2014 16:29:40

JOURNAL OF APPLIED PHYSICS **116**, 024506 (2014)

# Resonator-bolometer theory, microwave read out, and kinetic inductance bolometers

M. A. Lindeman
*Jet Propulsion Laboratory, California Institute of Technology, Pasadena, California 91109, USA*

(Received 27 March 2014; accepted 1 July 2014; published online 14 July 2014)

Kinetic inductance bolometers and calorimeters, each consisting of a kinetic inductance device suspended on a membrane and embedded in a resonant circuit, are being developed for applications such as planetary science, climate science, and X-ray spectroscopy. Arrays of these resonator-bolometers, each with a unique resonance frequency, are coupled to a single feedline, allowing many bolometers or calorimeters to be multiplexed using microwave read out. We derive coupled linear differential equations describing resonator-bolometers and means for calculating responses to signal and noise sources. By employing the bolometer matrix formalism, the model compactly describes the effects of demodulation, detuning, electrothermal feedback, resonator to feedline coupling, and bolometer sensitivity to changes in temperature and bias current. Based on this theory, estimates for the bolometer response to phonon noise, Johnson noise, and microwave bias quasiparticle generation noise are derived. The model is represented in terms of accessible parameters, most of which are measurable using a network analyzer. It is applicable to other types of devices such as dielectric bolometers or alternating current biased transition edge sensors and is readily extendible to more complex bolometers or to unsuspended kinetic inductance devices. © *2014 AIP Publishing LLC*. [http://dx.doi.org/10.1063/1.4890018]

## I. INTRODUCTION

The microwave kinetic inductance detector[1–5](MKID) concept has been rapidly developed over the past decade to enable large arrays of MKIDs to be deployed at telescopes around the world.[6] These devices employ microwave readout, which allows large numbers of devices to be readout on a single feedline using standard microwave electronics. In this scheme, each detector is embedded in a resonator with a unique resonance frequency. Signals in a detector alter the resonance frequency and the quality factor $Q$ of the resonator. A generator sends a comb of microwave frequencies to bias each of the resonators at resonance, and the responses of the resonators to signals in the detectors are read out. The fabrication of these arrays is relatively simple because the detector, resonator, and feedline are typically patterned from a single layer of superconductor.

Recently, a new class of devices has been under development in which the MKID is suspended on a membrane so that it functions as a thermal bolometer or calorimeter. Application of such bolometers includes mid and far infrared spectrometers for planetary science missions and earth observing satellites.[7–9] Suspended MKIDs are also being developed as sensitive x-ray detectors capable of measuring the energies of individual photons.[10] In these bolometric designs, the membrane is thermally decoupled from the bath temperature by a weak thermal link so that heat thermalizes on the membrane before it leaks out. In this mode, the bolometer acts as a single body at temperature $T$. This reduces various forms of internal thermal fluctuation noise[11] (ITFN) associated with the exchange of energy between components within the bolometer such as thermal quasiparticle generation-recombination noise. Short quasiparticle lifetimes are preferable in these kinetic inductance bolometers (KIBs) because short lifetimes improve thermalization within the bolometer, unlike in standard MKIDs, for which short quasiparticle lifetimes are associated with rapid loss of energy out of the detector and a reduction of the signal to noise ratio.

The model of alternating current (AC) bolometers in Ref. 12 describes some of the physics of resonator bolometers, but does not include the effects of coupling to a feedline for microwave readout nor is the model described in terms that are directly applicable to feedline coupled devices. Reference 7 presents a brief description of how to modify the AC bolometer matrix to apply it to feedline coupled devices to find the signal and the phonon noise in a KIB on resonance. However, no description of other important noise sources in these devices is given, such as quasiparticle generation noise, Johnson noise, and amplifier noise, nor have the effects of detuning on a KIB been described.

In this paper, new results are presented to aid in the development of KIBs. Accessible calculations of various sources of noise are included to predict performance of KIBs and related calorimeters. A new calculation for quasiparticle generation noise is presented, which includes effects omitted in previous estimates. The effects of detuning are included by the use of a rotation matrix. Detuning is also found to result in a new kind of electrothermal feedback (ETF), which can alter the thermal response time of the bolometers. Differential equations for the evolution of the phase and amplitude are derived, which enable computations of the stability and dynamics of the bolometers. A method for computing the temperature sensitivity of KIBs using superconductivity theory is also described.

 © 2014 AIP Publishing LLC

[This article is copyrighted as indicated in the article. Reuse of AIP content is subject to the terms at: http://scitation.aip.org/termsconditions. Downloaded to ] IP: 137.79.208.125 On: Mon, 14 Jul 2014 16:29:40

In Sec. II, some of the basic properties of resonator-bolometers are summarized, such as resonator quality factors, the electrical and thermal circuits, and different coordinate systems, which facilitate the calculations in this paper. In Sec. III, a description of bolometer sensitivity is given, along with the means for measuring and calculating it. The theory of alternating current bolometers is reviewed in Sec. IV. In Sec. V, bolometer theory is combined with resonator physics to provide a compact model of feedline coupled KIBs. The model is applied in Sec. VI to compute expected sources of noise. Example applications of the model are given in Sec. VII.

## II. RESONATORS AND BOLOMETERS

The absolute value of the transmission coefficient $S_{21}$ of a generic feed line coupled resonator is plotted vs. frequency in Fig. 1(a), with a red diamond marking the resonance frequency $f_r$. The microwave bias frequency $f_0$, represented by a black circle, may be detuned off of resonance as illustrated in the figure. The shape of the resonance as a function of frequency $f$ depends on the quality factor $Q$ of resonance and a complex factor $\widehat{Q}_c$ (referred to as $\widehat{Q}_e$ in Ref. 13) that describes the coupling of the resonator to the feedline. Assuming that the kinetic inductance does not vary significantly due to variation in temperature or bias current during a transmission measurement, the transmission coefficient is modeled by[13]

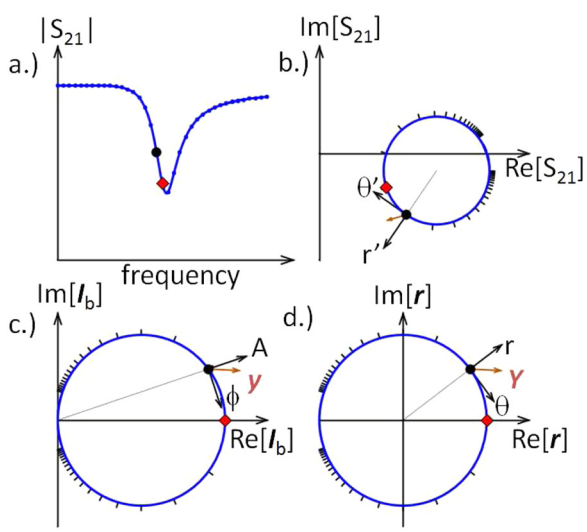


FIG. 1. A resonance of a feedline coupled resonator-bolometer. (a) A plot of the amplitude of the transmission through the feedline vs. frequency. The depicted resonance has some asymmetry, which may be caused by reactance or impedance mismatch in the circuit. The resonance point is represented by a red diamond. The bias point is represented by black circle. (b) A plot of the complex valued scattering parameter $S_{21}$ as a function of frequency. Noise at the read out amplifier is expressed in the radial and axial directions $r'$ and $\theta'$. (c) The resonance circle expressed in terms of current in the resonator. The amplitude and phase coordinates, A and $\phi$, are used in the alternating current bolometer model of Ref. 12. (d) A plot of the resonance in normalized coordinates in which the origin is at the center of the circle with unit radius. The resonator-bolometer model is expressed in the normalized radial and axial coordinates $r$ and $\theta$ which are illustrated. Note that the radial direction $r$ is not the same as the amplitude direction $A$, except when biased at resonance.

$$S_{21} \cong u \cdot \left(1 - \frac{Q/\widehat{Q}_c}{1+2iQx}\right); \quad \text{where}$$
$$\frac{1}{Q} = \frac{1}{Q_c} + \frac{1}{Q_i} \text{ and } \mathrm{Re}\left[\frac{1}{\widehat{Q}_c}\right] = \frac{1}{Q_c}, \tag{1}$$

where the detuning is $x = (f - f_r)/f_r$ and the coefficient $u$ is approximately equal to 1. The quality factor $Q$ depends on the internal quality factor $Q_i$, which describes electronic dissipation on the membrane in the bolometer, and the coupling quality factor $Q_c$, which describes dissipation outside of the bolometer. The parameter $\widehat{Q}_c$ not only depends on $Q_c$ but also depends on the coupling to the feed line and mismatched transmission lines, which may result in an asymmetric resonance as in Fig. 1(a) along with a complex value of $\widehat{Q}_c$. When $\widehat{Q}_c = Q_c$ and $u = 1$, the resonance in $S_{21}$ is symmetric as in Ref. 5. Absorption of power in the bolometer changes the impedance in the bolometer, the resonance frequency, and $Q_i$, thereby causing a detectible change in the transmission at the bias frequency $f_0$.

Fig. 1(b) shows $S_{21}$ plotted in the complex plane. The resonance traces out a circle, and the asymmetry is associated with scaling and rotation of the circle off the real axis. Measurements of this circle are used to constrain model parameters. The tick marks on the circle indicate equally spaced frequency intervals of $f_r$/6Q, which are shown as blue points in Fig. 1(a). The resonance and bias points are also plotted. Signal and noise, which are perturbations from the bias point, are illustrated as a brown vector in the figure. Coordinate axes used in the model are illustrated.

Far off resonance, $S_{21}$ is approximately 1 and the signal generator power $P_g$ is completely transmitted to the read out amplifier with impedance $Z_0$, corresponding to a voltage at the amplifier of $V_1 = \sqrt{2P_g Z_0}$. The voltage at the amplifier traces out a circle $V = S_{21}V_1$, similar to Fig. 1(b), but with radius $r_V = (Q/|\widehat{Q}_c|)(V_1/2)$.

A plot of the phasor $\boldsymbol{I}_b$, representing current in the bolometer, vs. frequency, also traces out a circle in the complex plane, as illustrated in Fig. 1(c), which is described by phasor, $\boldsymbol{I}_b = I_r/(1+2iQx)$, where $I_r$ is the current at resonance. The radius of this circle is $r_I = (I_0/2)\sqrt{4x^2Q^2+1}$ where the amplitude of the bias current is $I_0 = |\boldsymbol{I}_b|$.

In Ref. 4, the resonance circle, signal, and noise are normalized such that the resonance circle has unit radius, is centered at the origin as in Fig. 1(d), and is defined by

$$\boldsymbol{r} = \frac{2}{1+2iQx} - 1. \tag{2}$$

The normalized coordinates $r$ and $\theta$, illustrated by axes in Fig. 1(d), are used to describe normalized radial and axial perturbations from the steady state bias point. The radial direction of $\boldsymbol{r}$ is rotated with respect to the amplitude direction of $\boldsymbol{I}_b$ by angle $\varphi = \arg(\boldsymbol{r}/\boldsymbol{I}_b) = -\tan^{-1}(2Qx)$.

In Ref. 12, resonator-bolometers are modeled in terms of the thermal circuit and equivalent electrical circuit of Fig. 2. In the thermal circuit, the heat capacity $C$ of the bolometer is coupled to the bath temperature $T_b$ by thermal conductance $G$.

[This article is copyrighted as indicated in the article. Reuse of AIP content is subject to the terms at: http://scitation.aip.org/termsconditions. Downloaded to ] IP: 137.79.208.125 On: Mon, 14 Jul 2014 16:29:40

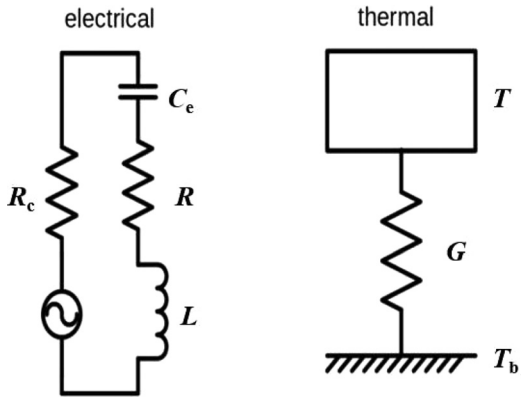


FIG. 2. The alternating current bolometer model. A resonator-bolometer is representened as a heat capacity $C$ coupled to the bath by thermal conductance $G$. The effects of the bias on the bolometer are represented by an equivalent LCR circuit, where the inductance $L$ and resistance $R$ of the bolometer depend on temperature $T$ and the amplitude of the alternating current $I$. The resistance $R_c$ represents dissipation outside of the bolometer.

Power absorbed or dissipated in the bolometer elevates the bolometer temperature $T$. The electrical circuit is an LCR equivalent circuit, which produces the resonance circle of Fig. 1(c). The equivalent electrical capacitance $C_e$ includes capacitance in the resonator and effects of reactance in the feedline. The inductance $L$ and resistance $R$ of the bolometer depend on the temperature and current in the bolometer. The resistance $R_c$ represents dissipation outside of the bolometer. The steady state values of the bolometer inductance, bias current amplitude, and resistance are $L_0$, $I_0$, and $R_0$. The angular frequency of the microwave bias is $\omega_0$.

The internal quality factor of the resonator is $Q_\mathrm{i} = \omega_0 L_0/R_0$, the coupling quality factor is $Q_\mathrm{c} = \omega_0 L_0/R_\mathrm{c}$, and the power dissipated in the resonator is $P_0 = I_0{}^2 R_0/2$. The dissipated power can be obtained through measurements of the microwave scattering parameters of the resonator. In the case of a symmetric resonance, $P_0$ is related to the microwave generator power $P_\mathrm{g}$ by[5]

$$P_0 = \frac{1}{2}\frac{1}{4x^2Q^2+1}\frac{4Q_\mathrm{c}Q_\mathrm{i}}{(Q_\mathrm{c}+Q_\mathrm{i})^2}P_\mathrm{g}. \tag{3}$$

## III. BOLOMETER SENSITIVITY

The impedance of the KIB, $Z = i\omega_0 L + R$, depends on the temperature $T$ and the amplitude of the microwave bias current $I_\mathrm{A}$ in the bolometer. The bolometer resistance $R$ includes all sources of electrical dissipation on the membrane. (Sources of dissipation in the resonator that lie off the membrane are included in $R_\mathrm{c}$.) Bolometer sensitivity to temperature and amplitude are parameterized by complex valued parameters[12] $\alpha = (T/R)(\partial Z/\partial T)$ and $\beta = (I_A/R)(\partial Z/\partial I_A)$. However, values of $I_A$, $R$, and $Z$ are not directly obtainable from $S_{21}$ measurements. By substituting in for $L$ and $R$ using the resonance frequency $f_\mathrm{r} = 1/2\pi(C_e L)^{1/2}$ and the definitions of the quality factors, we find the impedance is $Z = (iQ_\mathrm{i}f_0 + f_\mathrm{r})/Q_\mathrm{i}f_\mathrm{r}^2 C_\mathrm{e}$. Similarly, the current amplitude is $I_A = \sqrt{2P_0/R} = \sqrt{4\pi C_\mathrm{e}}a$, where $a = \sqrt{f_\mathrm{r}Q_\mathrm{i}P_0}$. Assuming $C_\mathrm{e}$ is independent of $T$ and $I$, we compute the partial derivatives[7] of $Z$ to find

$$\begin{aligned}
\alpha_\phi &= \mathrm{Im}[\alpha] = -2Q_\mathrm{i}\frac{T}{f_r}\frac{\partial f_r}{\partial T},\\
\alpha_A &= \mathrm{Re}[\alpha] = -\left(\frac{T}{Q_\mathrm{i}}\frac{\partial Q_\mathrm{i}}{\partial T} + \frac{T}{f_r}\frac{\partial f_r}{\partial T}\right),\\
\beta_\phi &= \mathrm{Im}[\beta] = -2Q_\mathrm{i}\frac{a}{f_r}\frac{\partial f_r}{\partial a}\text{, and}\\
\beta_A &= \mathrm{Re}[\beta] = -\left(\frac{a}{Q_\mathrm{i}}\frac{\partial Q_\mathrm{i}}{a} + \frac{a}{f_r}\frac{\partial f_r}{\partial a}\right).
\end{aligned} \tag{4}$$

The real parts of these parameters, $\alpha_A$ and $\beta_A$, pertain to perturbations in the amplitude direction $A$ in Fig. 1(c), and the imaginary parts, $\alpha_\phi$ and $\beta_\phi$, pertain to the phase direction $\phi$.

Values for the sensitivities in (4) can be obtained through fitting (1) to measurements of $S_{21}$ to find $Q_\mathrm{i}$, $f_r$, and their derivatives as functions of temperature and bias power, if the resonance is not significantly distorted due to large bias currents or temperature variations during the transmittance measurement.

MKIDs are sensitive thermometers[14,15] due to their large temperature sensitivity $\alpha_\phi$. As an example, theoretical calculations of $\alpha_\phi$ and $\alpha_A$ are plotted in Fig. 3 as a function of temperature for a superconducting film with a critical temperature of 14 K and a bias frequency of 1.2 GHz. The film's surface impedance $Z_\mathrm{s}$, which depends on the complex conductivity $\sigma$ is described by $Z_s \propto i(\sigma(T=0)/\sigma(T))^\gamma$ with gamma equaling 1, $1/2$, and 1/3 in the thin, thick local, and extreme anonymous limits of a BCS superconductor as summarized in Refs. 3 and 5. The complex conductivity $\sigma$ is computed from Mattis-Bardeen theory.[5] In this calculation, the energy gap $\Delta$, is calculated as in Ref. 16, using the Debye temperature to set the cut off energy in the BCS integrals. As illustrated in the plot, $\alpha_\phi$ is typically much larger than $\alpha_A$ for a wide range in temperatures below the critical temperature of the KIB and does not depend greatly on which of the BCS limits is considered.

The BCS calculations can be used to estimate $\alpha_\phi$ as a function of critical temperature $T_\mathrm{c}$ of the superconductor. For fixed bias frequency, the sensitivity $\alpha_\phi$ is expected be smaller for lower $T_\mathrm{c}$ KIDs. Devices with a $T_\mathrm{c}$ of 1 K correspond to $\alpha_\phi$ of 60 to 80 at 1.2 GHz, depending on the operating temperature. The current sensitivity $\beta$ is expected to be small if the bolometer is biased below the onset of the Duffing oscillator instability[5] so that the resonance shape does not vary significantly with bias power.

## IV. THERMAL SIGNALS AND ELECTRONIC SIDEBANDS

AC bolometer theory[12] describes the linear response of the bolometer biased at microwave frequency $\omega_0$ to signal and noise. Thermal signals at a low frequency $\omega$ are coupled to high frequency electrical oscillations within resonator at the upper sideband (USB) frequency $\omega_0 + \omega$ and the lower sideband (LSB) frequency $\omega_0 - \omega$. These signals are represented by a vector $\mathbf{x}$, which is a function of frequency $\omega$, and has components that are phasors

[This article is copyrighted as indicated in the article. Reuse of AIP content is subject to the terms at: http://scitation.aip.org/termsconditions. Downloaded to ] IP: 137.79.208.125 On: Mon, 14 Jul 2014 16:29:40

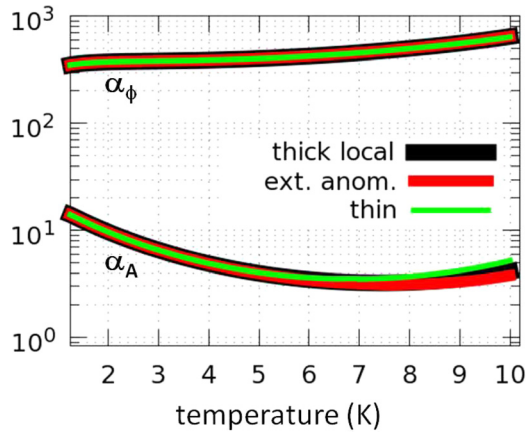


FIG. 3. Real and imaginary components of alpha for a BCS superconductor with a critical temperature of 14 K read out at 1.2 GHz, calculated in the thick local limit, the extreme anomalous limit, and the thin film limit. The imaginary component $\alpha_\phi$ is not significantly different in the different limits.

$$\mathbf{x} = \begin{pmatrix} \boldsymbol{I}_{\mathrm{USB}} \\ \boldsymbol{I}^*_{\mathrm{LSB}} \\ \boldsymbol{T}_{\mathrm{TB}} \end{pmatrix}. \tag{5}$$

The triplet of phasors in (5) represents displacements from the steady state sinus behavior of the bolometer. The phasor $\boldsymbol{I}_{\mathrm{USB}}$ represents displacement current at USB frequency $\omega_0 + \omega$. The phasor $\boldsymbol{I}_{\mathrm{LSB}}$ represents displacement current at LSB frequency $\omega_0 - \omega$. It is complex conjugated so that the relationships between the phasors can be described using a $3 \times 3$ algebraic matrix.[12] The phasor $\boldsymbol{T}_{\mathrm{TB}}$ represents displacements in the effective temperature in the thermal band (TB) at frequency $\omega$, which is much less than $\omega_0$. First order relationships between the triplet of frequencies and sources of signal and noise are represented by the linear equation

$$\mathbf{m} \cdot \mathbf{x} = \mathbf{n}, \tag{6}$$

in which the relationships between the components are represented by the matrix[12]

$$\mathbf{m} = \begin{pmatrix} Z_{\mathrm{eff}} + b_0 + Z_{\mathrm{c}} & b_0 & a_0 \\ b_0{}^* & Z_{\mathrm{eff}} + b_0{}^* + Z_{\mathrm{c}}{}^* & a_0{}^* \\ v & v & G_{\mathrm{eff}} \end{pmatrix}, \tag{7}$$

where $Z_{\mathrm{eff}} = i2\omega L_0 + R_0$, $G_{\mathrm{eff}} = i\omega C + G - I_0{}^2 R_0 \alpha_A / 2T_0$, $a_0 = I_0 R_0 \alpha / 2T_0$, $b_0 = \beta R_0/2$, $v = -I_0 R_0 (2 + \beta_A)/2$, and $I_0 = \sqrt{2P_0 R_0}$. (In the definition of $v$ in Ref. 12, the subscript of $I_0$ was erroneously dropped.) The coupling impedance $Z_{\mathrm{c}} = R_c + i2(\omega_0 - \omega_{\mathrm{r}})L_0$ represents the resistance off of the bolometer's membrane plus reactance associated with detuning off of angular resonance frequency $\omega_{\mathrm{r}}$. (Note that $Z_{\mathrm{eff}}$ is erroneously defined as $i2\omega_0 L_0 + R_0$ in Ref. 12, due to a subscript error that also affects Eq. (48) of that paper.)

The vector $\mathbf{n}$ represents a source of signal or noise as a function of frequency $\omega$. Its first component, $\mathbf{n}_1$, is a phasor representing a USB voltage source in series with the bolometer at USB frequency $\omega_0 + \omega$. Component $\mathbf{n}_2$ is the complex conjugate of the phasor representing a series voltage source at LSB frequency $\omega_0 - \omega$. Component $\mathbf{n}_3$ is the phasor representing a power source at TB frequency $\omega$. The vector format provides a compact representation of the correlated effects of a noise source in the different frequency bands. Examples of noise sources are given in Sec. VI. The response of the bolometer to a signal or noise source is computed by $\mathbf{x} = \mathbf{m}^{-1} \cdot \mathbf{n}$. The above description in which signal and noise are described in terms of their components in the sidebands is referred to as the sideband representation[12] (SBR).

## V. DYNAMICS OF AMPLITUDE, PHASE, AND TEMPERATURE

Signals $S$ are converted to amplitude $A$ and phase $\phi$ components by demodulation such that $S(t) = A(t)\cos(\omega_0 t) + \phi(t)\sin(\omega_0 t)$. The amplitude and phase components are represented by vector $\mathbf{y}$, depicted in Fig. 1(c). Axes corresponding to $A$ and $\phi$ are illustrated in the figure. The vector $\mathbf{y}$ is obtained algebraically by $\mathbf{y} = \mathbf{d} \cdot \mathbf{x}$, where the demodulation matrix[12] is

$$\mathbf{d} = \begin{pmatrix} 1 & 1 & 0 \\ i & -i & 0 \\ 0 & 0 & 1 \end{pmatrix}. \tag{8}$$

(The signs of the imaginary terms of $\mathbf{d}$ are defined differently here than in Ref. 12 to be consistent with the sign of $\phi(t)$.) In this representation, the microwave bias current has a zero phase, while $A$ and $\phi$ represent signals in phase and 90° out of phase with the bias. The vector $\mathbf{y}$ also contains the thermal component (which is not depicted in the figure) so that the components of $\mathbf{y}$ are phasors representing $A$, $\phi$, and $T_{\mathrm{TB}}$ at frequency $\omega$.

The vector $\mathbf{y}$ is converted to the normalized representation of Fig. 1(d) by the transformation $\mathbf{Y} = \mathbf{T_r} \cdot \mathbf{y}$, which scales the coordinates by $1/r_I$ and rotates the coordinate system by angle $\varphi$

$$\mathbf{T_r} = \begin{pmatrix} x_r & 2Qxx_r & 0 \\ -2Qxx_r & x_r & 0 \\ 0 & 0 & 1 \end{pmatrix}, \quad \text{where} \quad x_r = (2/I_0)/(4Q^2x^2 + 1). \tag{9}$$

The vector $\mathbf{Y}$ is expressed in the radial $r$ and axial $\theta$ components as illustrated by the axes in Fig 1(d).

Equation (6) is multiplied by $\mathbf{T_V}$ to normalize the voltage terms in the equations so that the bolometer is described without reference to resonator voltage, current, or resistance

$$\mathbf{T_V} = \begin{pmatrix} 1/V_0 & 0 & 0 \\ 0 & 1/V_0 & 0 \\ 0 & 0 & 1 \end{pmatrix}, \quad \text{where } V_0 = I_0 R_0/2. \tag{10}$$

These transformations result in new linear equations that relate sources $\mathbf{N}$ to demodulated signals $\mathbf{Y}$ as expressed in the normalized coordinates of Fig. 1(d)

$$\mathbf{M} \cdot \mathbf{Y} = \mathbf{N}, \tag{11}$$

where the normalized quantities are related to the SBR quantities by

[This article is copyrighted as indicated in the article. Reuse of AIP content is subject to the terms at: http://scitation.aip.org/termsconditions. Downloaded to ] IP: 137.79.208.125 On: Mon, 14 Jul 2014 16:29:40

$$\mathbf{Y} = \mathbf{T_r} \cdot \mathbf{d} \cdot \mathbf{x},\ \mathbf{N} = \mathbf{T_V} \cdot \mathbf{d} \cdot \mathbf{n}, \quad \text{and} \quad \mathbf{M} = \mathbf{T_V} \cdot \mathbf{d} \cdot \mathbf{m} \cdot \mathbf{d}^{-1} \cdot \mathbf{T_r}^{-1}. \tag{12}$$

Using (7)–(10) and (12), the definitions of coefficients in matrix **m**, and the definitions of the quality factors, the normalized bolometer matrix **M** is found to be

$$\mathbf{M}(\omega) = \begin{pmatrix} +\frac{2i\omega Q_\mathrm{i}}{\omega_0} + \frac{Q_\mathrm{i}}{Q} + \beta_A + 4Q_\mathrm{i}Qx^2 & \frac{-4i\omega Q_\mathrm{i}Qx}{\omega_0} - 2Qx\beta_A & +\frac{2\alpha_A}{T_0} \\ +\frac{4i\omega Q_\mathrm{i}Qx}{\omega_0} - \beta_\phi & +\frac{2i\omega Q_\mathrm{i}}{\omega_0} + \frac{Q_\mathrm{i}}{Q} + 4Q_\mathrm{i}Qx^2 + 2Qx\beta_\phi & -\frac{2\alpha_\phi}{T_0} \\ -(1+\beta_A/2)P_0 & +xQ(\beta_A+2)P_0 & +i\omega C + G - \frac{P_0\alpha_A}{T_0} \end{pmatrix}. \tag{13}$$

Equations (11) and (13) are Fourier transformed to find equations in the time domain, thereby transforming the $i\omega$ terms into time derivatives. The resulting differential equation is $\mathbf{D}_1 \cdot \dot{\mathbf{Y}}(t) = -\mathbf{D}_0 \cdot \mathbf{Y}(t) + \mathbf{N}$, where $\mathbf{Y}(t)$ is a vector containing the time domain variables, $r(t)$, $\theta(t)$, and $T_{TB}(t)$, describing how displacements in normalized radius, rotation angle, and effective temperature evolve over time. The coefficients of **Y** and the time derivative $\dot{\mathbf{Y}}$ are given by $\mathbf{D}_0 = \mathbf{M}(0)$ and $\mathbf{D}_1 = -i\partial\mathbf{M}/\partial\omega$. Solving for $\dot{\mathbf{Y}}$, we find

$$\dot{\mathbf{Y}} = \mathbf{M_t} \cdot \mathbf{Y} + \mathbf{D_1^{-1}} \cdot \mathbf{N}, \tag{14}$$

where the coefficients of the dynamic variables in the time domain equation are contained in matrix $\mathbf{M_t} = -\mathbf{D_1^{-1}} \cdot \mathbf{D}_0$. The eigenvalues and eigenvectors of $\mathbf{M}_\mathrm{t}$ are used to compute the pulse response and stability, as in other types of bolometers or calorimeters.[17–19] The system is stable only if the all the eigenvalues have negative real parts.

By dropping the source term **N**, assuming $x = 0$, and substituting in for $\mathbf{M_T}$, we find the homogenous linear differential equations for a resonator-bolometer biased on resonance

$$\begin{aligned} \frac{dr}{dt} &= -\left(\frac{\omega_0}{2Q} + \frac{\omega_0\beta_A}{2Q_\mathrm{i}}\right)r - \left(\frac{\omega_0\alpha_A}{T_0Q_i}\right)T_\mathrm{TB} \\ \frac{d\theta}{dt} &= \frac{+\omega_0\beta_\phi}{2Q_\mathrm{i}}r - \left(\frac{\omega_0}{2Q}\right)\theta + \left(\frac{\omega_0\alpha_\phi}{T_0Q_i}\right)T_\mathrm{TB} \\ \frac{dT_\mathrm{TB}}{dt} &= +\left(\frac{P_0}{C}\left(1+\frac{\beta_A}{2}\right)\right)r + \left(\frac{P_0\alpha_A}{CT_0} - \frac{G}{C}\right)T_\mathrm{TB}\,. \end{aligned} \tag{15}$$

The signal from absorbed power $P(t)$ may be included by adding a source term $P(t)/C$ to the right hand side of the third equation of (15). Noise terms are described in Sec. VI.

Equations (13)–(15) are useful because they represent the bolometer in terms of the quality factors, sensitivities $\alpha$ and $\beta$, and power $P_0$, which are obtained though $S_{21}$ measurements.[7] The heat capacity $C$ and thermal conductance $G$ can be estimated from the thermal design of the bolometers or measured by stimulating the bolometer with heat pulses.

## VI. BOLOMETER NOISE

Ideally, the dominant source of noise within the bandwidth of a kinetic inductance bolometer is phonon noise associated with exchange of energy across the weak thermal link $G$. Electronic noise from the bolometer, which equals or exceeds Johnson noise, limits the usable bandwidth of the bolometer to frequencies in which the phonon noise stands above the electronic noise. In low temperature resonators, two level systems (TLS) noise significantly affects the phase read out. Amplifier noise and electronic noise from sources outside the resonator may also contribute significantly. Calculations of the response to these sources of noise facilitate modeling and designing resonator-bolometers.

The phonon noise associated with the thermal link between the bolometer has root-mean-square (RMS) power fluctuations[20] $\sqrt{4k_\mathrm{B}T_\mathrm{b}{}^2G}$, resulting in noise vector

$$\mathbf{N}_\mathrm{ph} = \begin{pmatrix} 0 \\ 0 \\ \sqrt{4k_\mathrm{B}T_\mathrm{b}{}^2G} \end{pmatrix}. \tag{16}$$

The bolometer resistance $R_0$ results in Johnson noise[21] with RMS voltage fluctuation $V_\mathrm{e} = \sqrt{4k_\mathrm{B}TR_0}$ in both the USB and LSB. We decompose the Johnson noise into two vectors representing fluctuations in amplitude $A$ and phase $\phi$ directions rather than in terms of USB and LSB fluctuations as was done in Ref. 12. Each vector contributes an electronic voltage noise of magnitude $V_\mathrm{e}/\sqrt{2}$ in the USB and LSB, which are the first two components of the noise vectors. Together the vectors constitute the total Johnson noise $V_\mathrm{e}$ when added in quadrature. The two Johnson noise vectors in the SBR are

$$\mathbf{n}_{JA} = \frac{V_\mathrm{e}}{\sqrt{2}}\begin{pmatrix} 1 \\ 1 \\ -I_0 \end{pmatrix}, \quad \text{and} \quad \mathbf{n}_{J\phi} = \frac{V_\mathrm{e}}{\sqrt{2}}\begin{pmatrix} 1 \\ -1 \\ 0 \end{pmatrix}. \tag{17}$$

The first two components of the **n** vectors represent voltage fluctuations in the USB, and the LSB. The vector $\mathbf{n}_{JA}$ is equivalent to bolometer resistance fluctuations, and $\mathbf{n}_{J\phi}$ is equivalent to reactance fluctuations.

A resistor with current $I$ and Johnson noise voltage $V_\mathrm{e}$ dissipates power that fluctuates by power $IV_\mathrm{e}$. Similarly, the Johnson noise $\pm V_\mathrm{e}/\sqrt{2}$ in each of the USB or LSB components of (17) are associated with a correlated noise in the Joule power $(\mp I_0/2)V_\mathrm{e}/\sqrt{2}$, which appears in the power noise component[12] of $\mathbf{n}_{JA}$.

[This article is copyrighted as indicated in the article. Reuse of AIP content is subject to the terms at: http://scitation.aip.org/termsconditions. Downloaded to ] IP: 137.79.208.125 On: Mon, 14 Jul 2014 16:29:40

Using Eqs. (8), (10), (12), (17), and $I_0 = \sqrt{2P_0R_0}$, the corresponding normalized noise vectors are found to be

$$\mathbf{N}_{JA} = \begin{pmatrix} \sqrt{16k_\mathrm{B}T_0/P_0} \\ 0 \\ -\sqrt{4k_\mathrm{B}T_0P_0} \end{pmatrix}, \quad \text{and} \quad \mathbf{N}_{J\phi} = \begin{pmatrix} 0 \\ i\sqrt{16k_\mathrm{B}T_0/P_0} \\ 0 \end{pmatrix}. \tag{18}$$

The components of the $\mathbf{N}$ vectors represent normalized RMS voltage noise fluctuations in the amplitude and phase directions, along with power fluctuations in the third component. Equation (18) provides means to compute the Johnson noise in normalized units, without reference to bolometer resistance. The phases of components in (18) describe the phase of the demodulated noise components relative to the phase in the SBR sources.

The electronic noise in a kinetic inductance bolometer may exceed Johnson noise due to the generation of quasiparticles of energy $E_{qp}$ by the microwave bias. In Ref. 5, the noise equivalent power (NEP) of this noise is estimated to equal the power shot noise with RMS fluctuations $P_\Delta = \sqrt{4E_{qp}P_0}$, where the quasiparticle energy $E_{qp}$ is assumed to be approximately equal to the superconducting energy gap $\Delta$ of the superconductor. However, the energy to create the quasiparticles comes directly from the microwave bias current, resulting in additional voltage fluctuations in the KIB. Consequently, the voltage and power fluctuations have the same form as Johnson noise, resulting in quasiparticle generation noise vectors $\mathbf{N}_{gA}$ and $\mathbf{N}_{g\phi}$ which are multiples of the Johnson noise vectors

$$\mathbf{N}_{gA} = M_\mathrm{e}\mathbf{N}_{JA} \quad \text{and} \quad \mathbf{N}_{g\phi} = M_\mathrm{e}\mathbf{N}_{J\phi}, \quad \text{where } M_\mathrm{e} = \sqrt{\frac{E_{qp}}{k_\mathrm{B}T_0}}. \tag{19}$$

The value of multiplier $M_\mathrm{e}$ is defined such that the third component of $\mathbf{N}_{gA}$, representing fluctuating power in the bolometer, equals the shot noise power $P_\Delta$. Typically, the NEP associated with (19) is larger than $P_\Delta$.

TLS noise, which is significant in low temperature resonators,[5,22] is equivalent to a fluctuating resonance frequency,[3] producing noise of the form $\mathbf{N}_\mathrm{TLS} = M_\mathrm{TLS}(f) \cdot \mathbf{N}_{J\phi}$. The multiplier $M_\mathrm{TLS}(f)$ describes how the magnitude of the TLS noise compares to Johnson phase noise at frequency $f$ in the demodulated signal. The scale of the TLS noise depends on the details of the design of the resonator.

The response $\mathbf{Y}$ of the bolometer to sources of noise in the bolometer or in series with it is found by multiplying the sources by the inverse matrix, $\mathbf{Y} = \mathbf{M}^{-1} \cdot \mathbf{N}$. The RMS value of the output noise is $\mathbf{Y}_\mathrm{RMS} = |\mathbf{M}^{-1} \cdot \mathbf{N}_\mathrm{RMS}|$, where the noise vector $\mathbf{N}_\mathrm{RMS}$ describes the RMS noise and relative phases of the noise components as in (16), (18), and (19). The RMS noise $\mathbf{Y}_\mathrm{RMS}$ is computed for each noise source and then summed in quadrature to find the total noise at the output. The second component $[\mathbf{Y}_\mathrm{RMS}]_2$ describes the noise in the $\theta$ direction. The corresponding responsivity to power sources is matrix element $(\mathbf{M}^{-1})_{2,3}$. The NEP is the noise divided by the responsivity

$$NEP_\theta = |[\mathbf{Y}_\mathrm{RMS}]_2/(\mathbf{M}^{-1})_{2,3}|. \tag{20}$$

## VII. APPLICATION

To make simple estimations of the signal and noise in a KIB, the bolometer theory is applied to compute the predicted signal and noise in an idealized perfectly matched and tuned bolometer in which the sensitivity only depends on $\alpha_\phi$. These estimations can be used to roughly predict performance, as described below, or to set requirements for read out electronics, and to design bolometers.

The NEP of the phonon noise, $NEP_{PN}$, of a bolometer should stand above other sources of noise, which occurs only if there is sufficient gain from the bolometer. To estimate the gain for low frequency thermal signals in an idealized bolometer, we assume sensitivities $\alpha_A$, $\beta$, and detuning $x$ are negligible, $Q_i \cong 2Q$, and compute the response at $\omega = 0$ in the $\theta$ component. In this case,

$$\mathbf{M} \cong \begin{pmatrix} 2 & 0 & 0 \\ 0 & 2 & -\dfrac{2\alpha_\phi}{T_0} \\ -P_0 & 0 & G \end{pmatrix}. \tag{21}$$

Using (16), (18), (20), and (21), the NEP of Johnson noise is found to be $NEP_J \sim 2\sqrt{(GT_0/P_0\alpha_\phi{}^2)} \cdot NEP_{PN}$. Using (19), the response to the electronic noise is estimated to be $NEP_e \sim \sqrt{\Delta/k_\mathrm{B}T}NEP_J$. The power $P_0$ applied to the bolometer is typically less than[9] $GT_0/50$, and $\Delta$ is less typically than $\sim 10\ k_\mathrm{B}T_0$. In this case, $NEP_{PN}$ exceeds the other noise sources if $\alpha_\phi > \sim 6\sqrt{GT_0/P_0}$. This expression implies that, if the bias power is small such that it only heats the bolometer by $\sim$1% above bath temperature so that $GT_0/P_0 \sim 100$, then $\alpha_\phi$ must be $\sim$60 for the phonon noise to stand above the electronic noise.

Noise associated with the read out should be smaller than the bolometer noise to take full advantage of a bolometer's sensitivity. A readout amplifier with noise temperature $T_\mathrm{A}$, produces noise $V_A = \sqrt{k_BT_\mathrm{A}Z_0}$ in each sideband. The microwave generator noise, with noise temperature $T_\mathrm{G}$ (typically equal to the temperature of an attenuator on the generator output) produces noise $V_\mathrm{G} = S_{21} \cdot \sqrt{k_BT_\mathrm{G}Z_0}$ in the sidebands. Accounting for demodulation, which adds the two sidebands in quadrature, and converting to normalized coordinates by dividing by the radius $r_V$, the in-band normalized amplifier noise and generator noise in the phase and amplitude directions are estimated to be $\sqrt{2}V_\mathrm{A}/r_V$ and $\sqrt{2}V_\mathrm{G}/r_V$, respectively. These estimations assume there is negligible interaction between these noise sources and the bolometer.

In a matched resonator, the radius $r_V = \sqrt{P_0Z_0}/2$, so the amplifier noise in the phase direction is $\sqrt{8k_\mathrm{B}T_\mathrm{A}/P_0}$. Using (16) and (21), we find that phonon noise in the phase direction is $\alpha_\phi\sqrt{4k_\mathrm{B}/G}$. The noise temperature of the amplifier must be less than $\alpha_\phi{}^2P_0/2G$ to lie below the phonon noise. For example, to readout a KIB similar to the bolometer in Ref. 7 at 3 K, with $\alpha_\phi = 400$, biased with a small power

[This article is copyrighted as indicated in the article. Reuse of AIP content is subject to the terms at: http://scitation.aip.org/termsconditions. Downloaded to ] IP: 137.79.208.125 On: Mon, 14 Jul 2014 16:29:40

$P_0 \sim GT_0/1000$, the amplifier noise temperature should be significantly less than 240 K to be smaller than the phonon noise.

The above estimations facilitate the design of bolometers and experiments. However, a numerical calculation of the full model is useful to predict performance in detail or to analyze the results of measurements. As an example, we used the resonator-bolometer model to calculate the predicted noise in a KIB fabricated from the high temperature superconductor YBCO similar to the bolometers of Ref. 9 but operating at temperature $T_0 = 50\,\mathrm{K}$, with thermal conductance $G = 380\,\mathrm{nW/K}$ and heat capacity $C = 4.5\,\mathrm{nJ/K}$. The predicted noise in the $\theta$ component is plotted in Fig. 4, with the electronic noise curve in the plot representing the combined Johnson noise and microwave bias quasiparticle generation noise. The calculations assumed the resonance frequency is $f_r = 2.0\,\mathrm{GHz}$, with the microwave bias detuned by $+300\,\mathrm{kHz}$. The bolometer temperature and current sensitivities are $\alpha = 4 + 400i$ and $\beta = 0.1i$ The resonator is matched to the readout with $Q_i = 2500$ and $Q = 1250$. The multiplier associated with the quasiparticle generation noise is estimated to be $M_e = 2$. The power from the generator is $P_G = 16\,\mathrm{nW}$, with power dissipation in the bolometer $P_0 = 7$ nW. The amplifier has noise temperature $T_A = 30\,\mathrm{K}$, and the generator has an attenuator at temperature $T_G = 50\,\mathrm{K}$.

The resonator bandwidth in Fig. 4 is determined by the resonator quality factor. The signal bandwidth, over which the phonon noise is larger than the electronic noise, depends on the gain of resonator-bolometer. The thermal bandwidth, which is associated with the response to thermal signals, is approximately equal to $(1/2\pi)G/C$, but is increased slightly by a small amount of negative ETF in this bolometer. The negative ETF is associated with detuning above resonance: For positive detuning, a positive temperature fluctuation causes increased detuning, resulting in decreased power in the bolometer. The decreased power dissipation cools the bolometer back to equilibrium faster than through thermal cooling alone. This negative feedback broadens the thermal bandwidth, reduces the gain within the thermal bandwidth, and decreases the electronic noise within the thermal bandwidth, in a similar fashion to electrothermal feedback in other types of bolometers.[19] In this example, the feedback is small because the power applied is not sufficient to significantly heat the bolometer. However, a KIB could be designed to operate such that the bias power significantly heats the bolometer, resulting in strong negative electrothermal feedback, thereby significantly reducing the thermal response time.

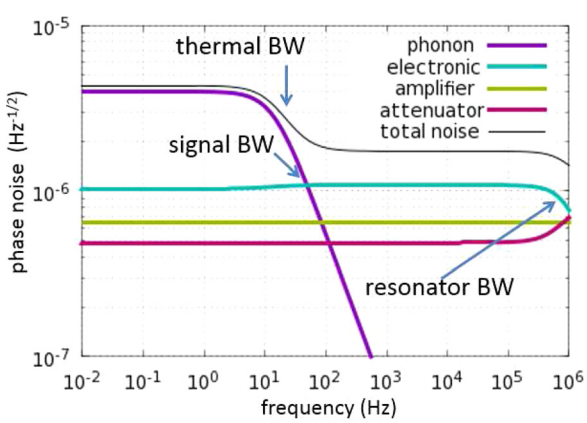


FIG. 4. Noise in a resonator-bolometer demodulated signal in the phase direction. Phonon noise from the thermal coupling, electronic noise associated with dissipation in the bolometer, amplifier noise from an amplifier, and noise from a 50 K attenuator at the input are plotted. Phonon noise has a shoulder at the thermal bandwidth. The contribution of the bolometer's electronic noise decreases beyond the resonator bandwidth due to deceased coupling to the feedline away from resonance. The contribution of the attenuator noise increases because S21 of the USB and LSB is larger far from resonance.

The noise in $r$ and $\theta$ can be referred to voltage noise at the amplifier through multiplication by $r_V$. When biased at resonance, the fluctuations in $\theta$ are related to fluctuations in resonance frequency by[4] $\Delta f_r = f_r\theta/4Q$. Off of resonance, $\theta$ noise may be related to frequency noise using Eq. (2). The noise may be expressed as a NEP of the bolometer using (20). If the device is used as an x-ray calorimeter, such as in Ref. 10, the predicted energy resolution is obtained from an integral[23] of the NEP. The model results, together with experimental data, facilitate the optimization of such X-ray spectrometers for high energy resolution.

## VIII. DISCUSSION

The resonator-bolometer model provides a compact description of KIBs in terms of the quality factors, sensitivities $\alpha$ and $\beta$, and thermal quantities $C$ and $G$. The model of (11) and the definitions of sensitivities in (4) are also applicable to other types of resonator-bolometers as well, such as dielectric bolometers[24] or AC biased transition edge sensors.[25] The bolometer model may also be used to design bolometers in which electrothermal feedback enhances the thermal response time. The model may be modified to describe thermal couplings between the bolometer and other thermal bodies by extending the bolometer matrix $\mathbf{M}$ or by adding additional terms and differential equations to (14) or (15), as is done in modeling other types of bolometers.[26,27] Additional noise vectors are required to describe noise associated with additional couplings. Applications of such extensions to the model include describing the response and noise of weakly coupled absorbers and calculations of the effect of thermal quasiparticle generation-recombination noise in the bolometers.

The model may also be modified to describe MKIDs which are not suspended on a membrane. In such a bolometer model, $C$ represents the electronic heat capacity of the quasiparticles, the thermal quasiparticle recombination time is given by $C/G$, and fluctuations in the number of quasiparticle $\Delta n_{qp}$ are related to fluctuations in the effective temperature $\boldsymbol{T}_{\mathrm{TB}}$ by $\Delta n_{qp} = C\boldsymbol{T}_{\mathrm{TB}}/E_{qp}$. Additional noise sources and coefficients (such as optical efficiency $\eta_o$ and bias power efficiency[5] $\eta_A$) may be included to represent athermal losses of quasiparticles to the substrate.

## ACKNOWLEDGMENTS

This research was supported by an appointment to the NASA Postdoctoral Program at the Jet Propulsion

[This article is copyrighted as indicated in the article. Reuse of AIP content is subject to the terms at: http://scitation.aip.org/termsconditions. Downloaded to ] IP: 137.79.208.125 On: Mon, 14 Jul 2014 16:29:40

Laboratory, administered by Oak Ridge Associated Universities through a contract with NASA. The research was carried out at the Jet Propulsion Laboratory, California Institute of Technology, under a contract with the National Aeronautics and Space Administration. The author would like to thank Peter Day and Alan Kleinsasser for useful discussions.

[1]P. Day, H. LeDuc, B. Mazin, A. Vayonakis, and J. Zmuidzinas, Nature **425**, 817 (2003).
[2]B. Mazin, Ph.D. thesis, California Institute of Technology, 2004.
[3]J. Gao, Ph.D. thesis, California Institute of Technology, 2008.
[4]R. Barends, Ph.D. thesis, Technische Universiteit Delft, 2009.
[5]J. Zmuidzinas, Annu. Rev. Condens. Matter Phys. **3**, 169 (2012).
[6]L. J. Swenson, P. K. Day, C. D. Dowell, B. H. Eom, M. I. Hollister, R. Jarnot, A. Kovács, H. G. Leduc, C. M. McKenney, R. Monroe, T. Mroczkowski, H. T. Nguyen, and J. Zmuidzinas, Proc. SPIE **8452**, 84520P (2012).
[7]M. A. Lindeman, B. H. Eom, P. K. Day, L. J. Swenson, R. Wernis, H. G. LeDuc, and J. Zmuidzinas, J. Low Temp. Phys. **176**, 511 (2014).
[8]A. V. Timofeev, V. Vesterinen, P. Helistö, L. Grönberg, J. Hassel, and A. Luukanen, Supercond. Sci. Technol. **27**, 025002 (2014).
[9]M. A. Lindeman, J. A. Bonetti, B. Bumble, P. K. Day, B. H. Eom, W. A. Holmes, and A. W. Kleinsasser, J. Appl. Phys. **115**, 234509 (2014).
[10]A. Miceli, T. W. Cecil, L. Gades, and O. Quaranta, J. Low Temp. Phys. **176**, 497–503 (2014).
[11]H. F. C. Hoevers, A. C. Bento, M. P. Bruijn, L. Gottardi, M. A. N. Korevaar, W. A. Mels, and P. A. J. de Korte, Appl. Phys. Lett. **77**, 4422 (2000).
[12]M. A. Lindeman, P. Khosropanah, and R. A. Hijmering, J. Appl. Phys. **113**, 074502 (2013).
[13]M. S. Khalil, M. J. A. Stoutimore, F. C. Wellstood, and K. D. Osborn, J. Appl. Phys. **111**, 054510 (2012).
[14]D. G. McDonald, Appl. Phys. Lett. **50**, 775 (1987).
[15]M. D. Audley, R. L. Kelley, and G. L. Rawley, J. Low Temp. Phys. **93**, 245 (1993).
[16]M. Tinkham, *Introduction to Superconductivity*, 2nd ed. (McGraw-Hill, Inc., 1996).
[17]M. A. Lindeman, Ph.D. thesis, University of California, Davis, 2000.
[18]M. A. Lindeman, S. Bandler, R. P. Brekosky, J. A. Chervenak, E. Figueroa-Feliciano, F. M. Finkbeiner, M. J. Li, and C. A. Kilbourne, Rev. Sci. Instrum. **75**, 1283 (2004).
[19]K. D. Irwin and G. C. Hilton, "Transition-Edge Sensors" in *Topics in Applied Physics*, edited by C. Enss (Springer-Verlag, 2005), pp. 63–149.
[20]J. C. Mather, Appl. Opt. **21**, 1125 (1982).
[21]H. Nyquist, Phys. Rev. **32**, 110 (1928).
[22]J. Gao, M. Daal, J. M. Martinis, A. Vayonakis, J. Zmuidzinas, B. Sadoulet, B. A. Mazin, P. K. Day, and H. G. Leduc, Appl. Phys. Lett. **92**, 212504 (2008).
[23]S. H. Moseley, J. C. Mather, and D. McCammon, J. Appl. Phys. **56**, 1257 (1984).
[24]R. A. Hanel, J. Opt. Soc. Am. **51**, 220 (1961).
[25]J. van der Kuur, L. Gottardi, M. P. Borderias, B. Dirks, P. de Korte, M. Lindeman, P. Khosropanah, R. den Hartog, and H. Hoevers, IEEE Trans. Appl. Supercond. **21**, 281 (2011).
[26]E. Figueroa-Feliciano, J. Appl. Phys. **99**, 114513 (2006).
[27]P. Khosropanah, T. Suzuki, R. A. Hijmering, M. L. Ridder, M. A. Lindeman, J.-R. Gao, and H. Hoevers, J. Low Temp. Phys. **176**, 363–369 (2014).

[This article is copyrighted as indicated in the article. Reuse of AIP content is subject to the terms at: http://scitation.aip.org/termsconditions. Downloaded to ] IP: 137.79.208.125 On: Mon, 14 Jul 2014 16:29:40