REVISION RECORD			
LTR	ECO NO:	APPROVED:	DATE:

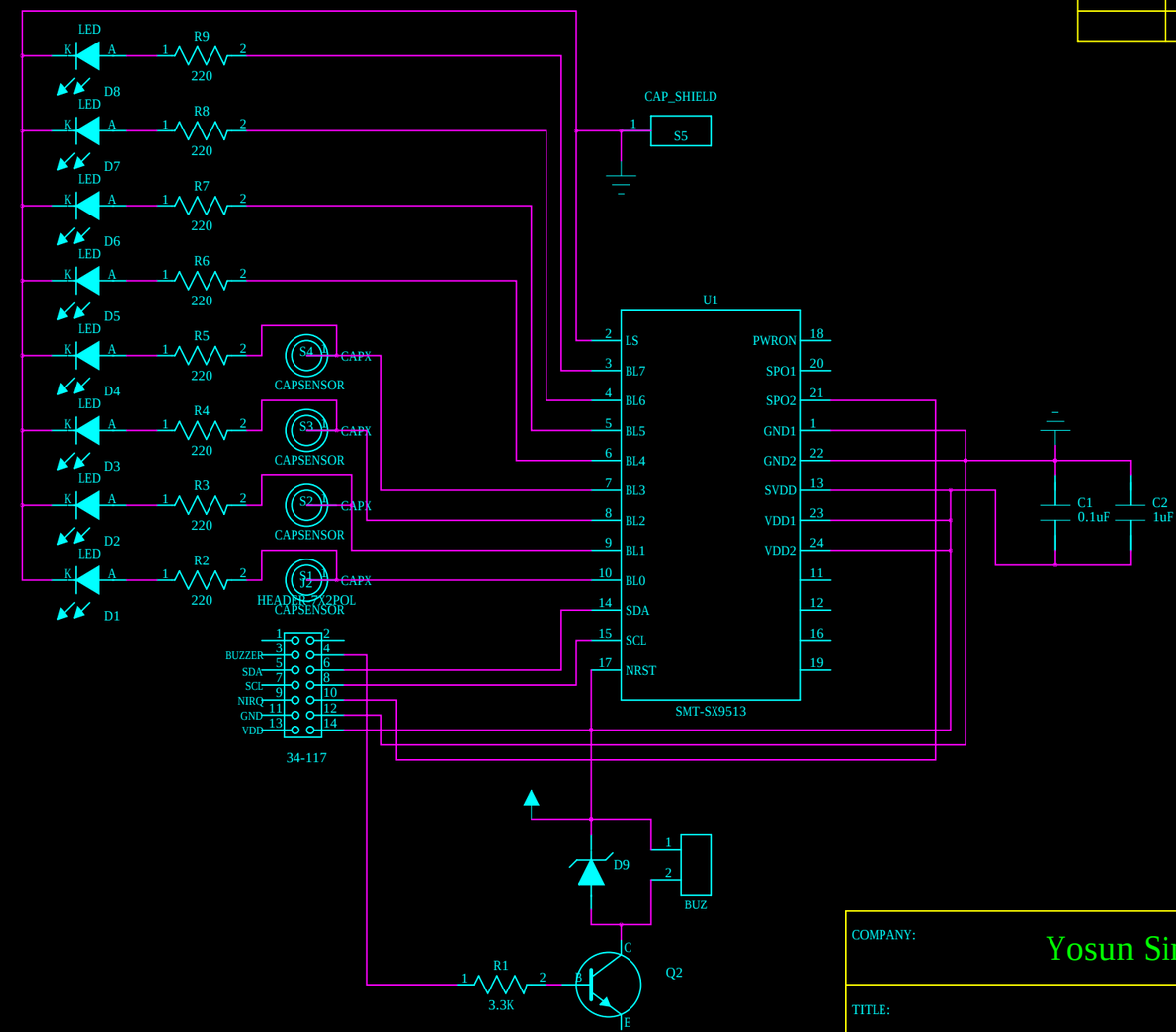

NIRQ - IRQ from SX9513
GND - Ground
SCL - I2C clock
SDA - I2C data
VDD - VDD power from controller

DRAWN: Mark Ma	DATED: June 17, 2014
CHECKED: <Checked By>	DATED: <Checked Date>
QUALITY CONTROL: <QC By>	DATED: <QC Date>
RELEASED: <Released By>	DATED: <Release Date>

COMPANY: Yosun Singapore Pte Ltd

TITLE: Cap-Touch Board

CODE:	SIZE:	DRAWING NO:	REV:
<Code>	B	<Drawing Number>	<Revision>

SCALE: <Scale> SHEET: 1 OF 1