Acuvim 3

Advanced Power Quality Meter
Datasheet

EN55011

IEC 61000-4-30 Certified

DESCRIPTION

Acuvim 3 is the ultimate power quality and revenue grade energy meter fully compliant to IEC 61000-4-30 Class A standard and third-party certified by NMi. Designed with an industry-leading ANSI C12.20 Class 0.1/IEC 62053-2 Class 0.1S measurement accuracy and able to precisely detect power quality anomalies in critical distributed energy systems. Reports, data, analysis and control are easily accessible anywhere when using the optional 7-inch color touch screen remote display unit or web interface.

FEATURES

+ ANSI C12.20/IEC 62053-22 Class 0.1 accuracy for revenue metering
+ IEC 61000-4-30 Class A compliant power quality monitor
+ IEC 61000-4-15 compliant flicker measurement for voltage fluctuations
+ Meter sampling rate at 1024 samples/cycle
+ Waveform capture detection up to 512 samples/cycle and stored in COMTRADE data format
+ Frequency deviation triggers high speed data log-based events with pre/post event recording of active power and frequency
+ EN50160/IEEE519 compliant power quality report
+ IEEE C37.118 compliant synchrophasor measurement and data transfer
+ Time synchronization with IRIG-B, NTP, SNTP and PTP
+ Multi-protocol communications: IEC 61850, EtherNet/IP, Modbus-RTU, Modbus-TCP/IP, BACnet-IP, BACnet MS/TP, DNP3 TCP, SNMP, and IPv6/Ipv4
+ Dual Ethernet port, RS485, Wi-Fi (2.4GHz), IRIG-B, 4 digital I/O, and USB-C interface
+ 32 GB data logger and data post. Up to 15 configurable dataloggers with user-selectable logging interval and parameters
+ Time of Use (TOU) support with 8 tariff rates and up to 12 historic billing periods
+ Optional 7-inch HMI touch screen color remote display unit
+ 5A/1A, 333mV or RCT (Rogowski) current sensing input
+ DIN rail mount or panel mount installation

KEY FEATURES

Power Quality Analysis

IEC 61000-4-30 Class-A compliant metering:

+ Voltage/Current RMS measurement updated at half-cycle, with IEC 61557-12 Class 0.1 accuracy
+ Frequency 40Hz to 70Hz, 1mHz accuracy exceeds IEC 61557-12 Class 0.02 requirements
+ IEC 61000-4-15 Class F1 flicker voltage fluctuation measurement updated at 10-minute/2-hour intervals
+ Voltage/Current Harmonics up to 127th

PQ event monitoring:

+ Examines half-cycle voltage RMS and current RMS to detect sags, swell, or unbalance events
+ Analyze transient voltage at a rate of 32,000 samples per second
+ Detect voltage interruption based on threshold and hysteresis triggers

Waveform capture and fast logging:

+ Sample up to 60 cycles before and up to 300 cycles after PQ events
+ High resolution waveform sampling rate up to 512 samples per cycle for voltage and current
+ DI triggered waveform
+ 10-second extended waveform capture
+ Capture waveform events in COMTRADE file formats and posted to remote server via HTTP/FTP
+ Fast log waveform capture for half-cycle voltage and current RMS. Stored in a CSV file for post transfer to remote server
+ Configure alarms to automatically send waveform capture event-based emails

IEC 61000-4-30 PQ compliant measurements and logging reports:

+ EN 50160 power quality logging report for voltage RMS, unbalance, THD, harmonics, interruption, dip, and swell
+ IEEE 519 pass/fail report for voltage and current harmonics distortion
+ ITIC/CBEMA and SEMI curves analysis for power tolerance restrictions and IT infrastructure

Revenue Grade Power & Energy Metering

High precision resolution:

+ Active energy: IEC 62053-22 Class 0.1S/ANSI C12.20 Class 0.1
+ Reactive energy exceeds IEC 62053-24 Class 0.5S
+ Active power: IEC 61557-12 Class 0.1
+ Power factor exceeds IEC61557-12 Class 0.5

Measurements:

+ Monitor real-time parameters for current, voltage, active power, reactive power, power factor, frequency, load nature
+ Bidirectional energy: import/export/net/total
+ Full four quadrant recording and analysis of energy flow for each phase and system energy

Time of Use (TOU) metering:

+ Up to 8 tariff rates
+ Rate structure assignment at 30 minutes interval
+ Record TOU net active energy, net reactive energy, apparent energy, and their maximum values for configured billing period
+ Record for current and 12 previous billing periods

Synchrophasor Measurement

IEEE C37.118 compliant for high-speed precision measurements and data transfer:

+ Synchronized phasor
  + IRIG-B time synchronization in millisecond level precision
  + Magnitude / angle size for both voltage / current phasors
  + Individual voltage and current channel and polyphase positive sequence convention
  + Frequency and rate of change of frequency (ROCOF) detection against islanding
+ Configurable reporting data frame rates
  + 50Hz: 10, 25, 50 frames/second
  + 60Hz: 10, 12, 15, 20, 30, 60 frames/second
+ Communication protocol
  + Producer (server) of synchrophasor data
  + TCP/IP Ethernet-based network with broadcast/multicast data transmission support
  + UPD data frame transmission using spontaneous or commanded communication modes

APPLICATIONS

+ SCADA
+ UPS Systems
+ Transportation Monitoring
+ Auxiliary Frequency Response Services and Incentives
+ Power Distribution
+ Critical infrastructure
+ Power Distribution Substations
+ DER - Microgrids and Virtual Power Plants
+ Industrial Automation
+ Manufacturing Facilities
+ University and Clinical Laboratories
+ Healthcare Facilities EPSS Testing Systems
+ Power Quality
+ Telecommunications
+ Power Distribution Units and Data Center Infrastructure

SPECIFICATIONS

Metering

PARAMETERS	ACCURACY	RESOLUTION	RANGE	UPDATE RATE
Voltage	0.1%	0.001V	VLN :10V~400V VLL:17.3V~690V	½ Cycle 200ms (10/12 Cycle)
Current	0.1%	0.001A	1A:10mA~2A 5A:50mA~10A 333mV:3mV~400mV Rogowski Coil:3mV~400mV	½ Cycle 200ms (10/12 Cycle)
Power	0.1%	1W	-999999.999MW~999999.999MW	½ Cycle 200ms (10/12 Cycle)
Reactive Power	0.1%	1var	-999999.999Mvar~999999.999Mvar	½ Cycle 200ms (10/12 Cycle)
Apparent Power	0.1%	1VA	0~999999.999MVA	½ Cycle 200ms (10/12 Cycle)
Power Demand	0.1%	1W	-999999.999MW~999999.999MW	½ Cycle 200ms (10/12 Cycle)
Reactive Power Demand	0.1%	1var	-999999.999Mvar~999999.999Mvar	½ Cycle 200ms (10/12 Cycle)
Apparent Power Demand	0.1%	1VA	0~999999.999MVA	½ Cycle 200ms (10/12 Cycle)
Power Factor	0.1%	0.001	-1.000~1.000	
Frequency	0.001%	0.001Hz	40.000Hz~70.000Hz	½ Cycle 200ms (10/12 Cycle) 10s
Energy	0.1%	0.001Wh	0~999999.999MWh	½ Cycle 200ms (10/12 Cycle)
Reactive Energy	0.1%	0.001varh	0-999999.999Mvarh	½ Cycle 200ms (10/12 Cycle)
Apparent Energy	0.1%	0.001VAh	0-999999.999MVAh	½ Cycle 200ms (10/12 Cycle)
Harmonics	0.15%	0.001%		200ms (10/12 Cycle)
Phase Angle		0.001°	0.000°~359.999°	½ Cycle 200ms (10/12 Cycle)
Unbalance Factor	0.15%	0.001%	0.000%~100.000%	200ms (10/12 Cycle)
Running Time		1 minute		
Flicker	5%			Short Term (10 min) Long Term (2 hour)

Input

CURRENT INPUTS *(EACH CHANNEL)*	
Nominal Current Options	① 5A, ② 1A, ③ 333mV, ④ Rogowski Coil
Metering Range	① 0-10A, ② 0-2A, ③ 0-400mV, ④ 0-400mV
Pickup Current	① 0.5mA, ② 0.5mA, ③ 0.25mV, ④ 0.25mV
Withstand	20Arms Continuous, 50Arms @10sec/hr, 500Arms @1sec/hr
Burden	0.05VA (Typical) @ 5A RMS
Accuracy	0.1% at Reading

VOLTAGE INPUTS *(EACH CHANNEL)*	
Nominal Full Scale	400Vac L-N, 690Vac L-L (+20%)
Withstand	1500Vac Continuous 2500Vac, 50/60Hz for 1 Minute
Input Impedance	2MΩ per Phase
Metering Frequency	40Hz~70Hz
Pickup Voltage	5Vac
Accuracy	0.1% at Reading

POWER ACCURACY	
Active Power	Class 0.1 (According to IEC61557-12)

FREQUENCY ACCURACY	
Frequency	Class 0.02 (According to IEC61557-12)

ENERGY ACCURACY	
Active	Class 0.1s (According to IEC 62053-22) Class 0.1 (According to ANSI C12.20)
Reactive	Class 0.5s (According to IEC 62053-24)

HARMONIC RESOLUTION	
Metered Value	127th Harmonic

SPECIFICATIONS

I/O Options

DIGITAL INPUT	
Input Type	Dry
Input Resistance	100kΩ
Input Voltage Range	20~160 Vac/dc
Input Current (Max)	2mA
Start Voltage	15V
Stop Voltage	5V
Pulse Frequency (Max)	100Hz, 50% Duty Ratio (5ms ON and 5ms OFF)
SOE Resolution	2ms

DIGITAL OUTPUT *(DO)*	
Voltage Range	0~250Vac/dc
Load Current	100mA (Max)
Output Frequency	25Hz, 50% Duty Ratio (20ms ON, 20ms OFF)
Isolation Voltage	2500Vac

RELAY OUTPUT *(RO)*	
Switching Voltage (Max)	250Vac, 30Vdc
Load Current	5A (R), 2A (L)
Set Time	10ms (Max)
Contact Resistance	30mΩ (Max)
Isolation Voltage	2500Vac

ANALOG OUTPUT *(AO)*	
Output Range	0~5V, 0~20mA 1~5V, 4~20mA Optional
Accuracy	0.50%
Temperature Drift	50ppm/°C Typical
Isolation Voltage	500Vdc
Open Circuit Voltage	15V

ANALOG INPUT *(AI)*	
Input Range	0~5V, 0~20mA 1~5V, 4~20mA Optional
Accuracy	0.20%
Temperature Drift	50ppm/°C Typical
Isolation Voltage	500Vdc

POWER SUPPLY FOR DI *(24 VDC)*	
Output Voltage	24Vdc
Output Current	42mA
Load (Max)	21DIs

Mechanical Characteristics

IP Degree of Protection	IP54: Panel mount and touchscreen display, front.
	IP30: Panel mount rear, DIN rail mount, I/O modules.

Communications

Serial Port Protocols	Modbus-RTU 9600~115200 bps
WEB SERVER	HTTP/HTTPS
TIME SYNCHRONIZATION	NTP, SNTP, IRIG-B, PTP
ETHERNET	IPv4, IPv6, DHXP, DNS MODBUS-TCP/IP DNP 3.0 Over IP Level 2 IEC 61850 1st and 2nd Edition PMU (C37.118) SNMP V2C and V3 BACnet-IP HTTP/HTTPS Webserver file download HTTP/HTTPS, FTP, sFTP, SMTP Email data post, EtherNet/IP
WI-FI	(802.11 b/g/n 2.4GHz/5GHz)

Control Power

Universal	AC or DC

AC/DC CONTROL POWER	
Operating Range	AC(P1):100~415Vac, 50/60Hz; 100~300Vdc DC(P2):20 to 60V DC±10%
Burden	15W, 25VA
Frequency	50/60Hz
Withstand	3250Vac, 50/60Hz for 1 minute
	Installation Category III (Distribution)

LOW VOLTAGE DC CONTROL POWER *(OPTIONAL)*	
Operating Range	20~60Vdc
Burden	5W

Operating Environment

Operating Temperature	-25°C to 70°C -13°F to 158°F
Storage Temperature	-40°C to 70°C -40°F to 158°F
Relative Humidity	5% to 95% Non-Condensing
Altitude	<3000m
Pollution Degree	2
Location/Mounting	Indoor use only

Standard Compliance & Certifications

Measurement Standard	IEC 62053-22; ANSI C12.20; IEC61557-12
Power Quality	Class A (According to IEC 61000-4-30)
Main Signaling	Class A (According to IEC 61000-4-30)
Flicker	IEC 61000-4-15 F1
Environmental Standard	IEC 60068-2, CE, RoHS
Safety Standard	IEC/UL 61010-1:2010, IEC/UL 61010—2-030:2010, Overvoltage Category III, Measurement Category III
EMC Standard	IEC 61000-4/-2-3-4-5-6-8-11-12-16-18, CISPR 32, Class B, IEC 62052-11, IEC 61326-1, IEC 61000-6-5
Outlines Standard	DIN 43700, ANSI C39.1
Protocol Conformance	IEC 61850 2nd Edition BTL Listed for B-SA

FUNCTION LIST

REAL TIME MEASURING	Parameters
Phase Voltage	V_A, V_B, V_C, VLN_AVG
Line Voltage	V_AB, V_BC, V_CA, VLL_AVG
Current	I_A, I_B, I_C, I_N, I_AVG
Power	P_A, P_B, P_C, P_SYS
Reactive Power	Q_A, Q_B, Q_C, Q_SYS
Apparent Power	S_A, S_B, S_C, S_SYS
Power Factor	PF_A, PF_B, PF_C, PF
Frequency	F
Load Features	L/C/R
Four Quadrant Powers	Four Quadrant Powers
FUNDAMENTAL	
Phase Voltage	V_A, V_B, V_C, VLN_AVG
Line Voltage	V_AB, V_BC, V_CA, VLL_AVG
Current	I_A, I_B, I_C, I_AVG, I_SYS
Line Current	I_AB, I_BC, I_CA, ILL_AVG
Power	P_A, P_B, P_C, P_SYS
Reactive Power	Q_A, Q_B, Q_C, Q_SYS
Apparent Power	S_A, S_B, S_C, S_SYS
Power Factor	PF_A, PF_B, PF_C, PF
MAX/MIN	
Frequency	F_Max, F_Min
Phase Voltage	Va_Max, Va_Min, Vb_Max, Vb_Min, Vc_Max, Vc_Min, Vln_AVG_Max, Vln_AVG_Min,
Line Voltage	Vab_Max, Vab_Min, Vbc_Max, Vbc_Min, Vca_Max, Vca_Min, Vll_AVG_Max, Vll_AVG_Min,
Current	Ia_Max, Ia_Min, Ib_Max, Ib_Min, Ic_Max, Ic_Min, I_AVG_Max, I_AVG_Min,
Power	Pa_Max, Pa_Min, Pb_Max, Pb_Min, Pc_Max, Pc_Min ,Psys_Max,Psys_Min
Reactive Power	Qa_Max, Qa_Min, Qb_Max, Qb_Min, Qc_Max, Qc_Min ,Qsys_Max, Qsys_Min
Apparent Power	Sa_Max, Sa_Min, Sb_Max, Sb_Min, Sc_Max, Sc_Min ,Ssys_Max,Ssys_Min
Power Factor	PFa_Lead_Max, PFb_Lag_Max, PFc_Lead_Max, PFsys_Lag_Max, PFa_Lead_Min, PFb_Lag_Min, PFc_Lead_Min, PFsys_Lag_Min, PFa_Lag_Max, PFb_Lag_Max, PFc_Lag_Max, PFsys_Lag_Max, PFa_Lag_Min, PFb_Lag_Min, PFc_Lag_Min, PFsys_Lag_Min,
Unbalance	Max Voltage Unbalance, Min Voltage Unbalance, Max Current Unbalance, Min Current Unbalance,
ENERGY	
Active Energy	Ep_imp, Ep_exp, Ep_total, Ep_net , Epa_imp, Epa_exp, Epb_imp, Epb_exp, Epc_imp, Epc_exp, Ep_q1, Ep_q2, Ep_q3, Ep_q4, Epa_q1, Epa_q2, Epa_q3, Epa_q4, Epb_q1, Epb_q2, Epb_q3, Epb_q4, Epc_q1, Epc_q2, Epc_q3, Epc_q4
Reactive Energy	Eq_imp, Eq_exp, Eq_total, Eq_net, Eqa_imp, Eqa_exp, Eqb_imp, Eqb_exp, Eqc_imp, Eqc_exp, Eq_q1, Eq_q2, Eq_q3, Eq_q4, Eqa_q1, Eqa_q2, Eqa_q3, Eqa_q4, Eqb_q1, Eqb_q2, Eqb_q3, Eqb_q4, Eqc_q1, Eqc_q2, Eqc_q3, Eqc_q4
Apparent Energy	Es_imp, Es_exp, Es_total, Es_net, Esa, Esb, Esc, Es_q1, Es_q2, Es_q3, Es_q4, Esa_q1, Esa_q2, Esa_q3, Esa_q4, Esb_q1, Esb_q2, Esb_q3, Esb_q4, Esc_q1, Esc_q2, Esc_q3, Esc_q4

FUNCTION LIST

DEMAND	
Current Demand	Dmd_IA, Dmd_IB, Dmd_IC, Dmd_ IN Dmd_IA_Max, Dmd_IB_Max, Dmd_IC_Max, Dmd_ IN_Max
Power Demand	Dmd_Psum, Dmd_Qsum, Dmd_ Ssum Dmd_Pa, Dmd_Qa, Dmd_ Sa Dmd_Pb, Dmd_Qb, Dmd_ Sb Dmd_Pc, Dmd_Qc, Dmd_ Sc Dmd_Psys_Max, Dmd_Qsys_Max, Dmd_ Ssys_Max Dmd_Pa_max, Dmd_Qa_max, Dmd_ Sa_max Dmd_Pb_max, Dmd_Qb_max, Dmd_ Sb_max Dmd_Pc_max, Dmd_Qc_max, Dmd_ Sc_max
HOUR	
Device Run Time	Hours, Minutes
POWER QUALITY	
Voltage THD	THD_Va, THD_Vb, THD_Vc
Current THD	THD_Ia, THD_Ib, THD_Ic
Current TDD	TDD_Ia, TDD_Ib,TDD_Ic
Individual Harmonics	Harmonics 2nd to 127rd (50Hz or 60Hz)
	Inter-harmonics
Voltage Crest Factor	Crest Factor
Current K Factor	K Factor
Voltage Flicker	Flicker_a, Flicker_b, Flicker_c (10 minutes and 2 hours)
SEQUENCE	
Voltage/Current Sequence	Positive Sequence, Negative Sequence, Zero Sequence
Voltage Unbalance	U_unbl
Current Unbalance	I_unbl
Aggregation	VLN,VLL,I,P,Q,S,Harmonics,Interharmonics,unbalnce parameters (150/180-cycle, 10Minutes, and 2 hours)
PHASE ANGLES	
Voltage/Current Phase Angles	Voltage Phase Angle, Current Phase Angle
STATISTICS	
MAX with Time Stamp MIN with Time Stamp	Each Phase of V & I Total of P, Q, S, PF & F Demand of I1, I2, I3, IN, P, Q, & S Each Phase THD of V & I Unbalance Factor of V & I
ALARM	
Over/Under Limit Alarm	V, I, P, Q, S, PF, V_THD & I_THD Each Phase and Total/Average Unbalance Factor of V& I Load Type Analog and Digital Input of Each Channel Demand of I1, I2, I3, P, Q & S Reverse Phase Sequence
WAVEFORM CAPTURE	
Voltage and Current Waveform	Voltage Sag, Voltage Dip, Voltage Swell, Voltage Interruption, Unbalance Voltage, Transient Voltage, Current Sag, Current Swell, Unbalance Current, Manual Trigger
POWER QUALITY EVENT LOGGING	
Power Quality Event with Time Stamp	Voltage Sag, Voltage Dip, Voltage Swell, Voltage Interruption, Unbalance Voltage, Transient Voltage, Current Sag, Current Swell, Unbalance Current, Manual Trigger
DATA LOGGING	
Up to 15 Data Logger	

FUNCTION LIST

TIME OF USE	
Energy/Max Demand	Ep_net,Eq_net,Es, Net_Pdemand_Max, Net_Qdemand_Max, S_demand_Max,
INPUT AND OUTPUT	
Digital Input (DI)	4 Digital Input
Digital Output (DO)	1 Digital Output
I/O MODULE (EXTENSION)	
Switch Status (DI)	Digital Input
Power Supply for DI	24V DC
Relay Output (RO)	NO, Form A
Digital Output (DO)	Photo-MOS
Pulse Output (PO)	By Using DO
Analog Input (AI)	0 (4) – 20mA, 0 (1) – 5V
Analog Output (AO)	0 (4) – 20mA, 0 (1) – 5V
COMMUNICATION	
Ethernet Ports	2 Ports(100BASE-TX): RJ45 connector, CAT5/5e/6/6a cable.
Wi-Fi	1 Ports (802.11 b/g/n 2.4GHz/5GHz)
RS485	1 Ports: Baud rates of 9600 to 115200, pluggable screw terminal connector
USB	1 Port
IRIG-B	1 Port
DISPLAY MODULE (OPTIONAL)	
LCD	7" touchscreen color LCD

DIMENSIONS

Acuvim 3 Dimensions

Front View

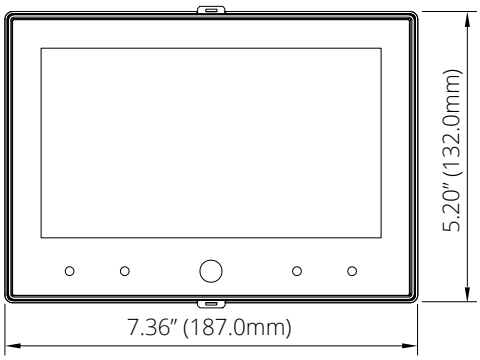

Rear View

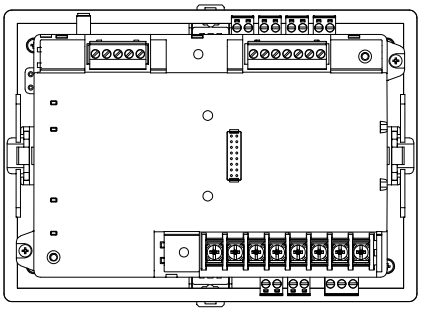

Side View

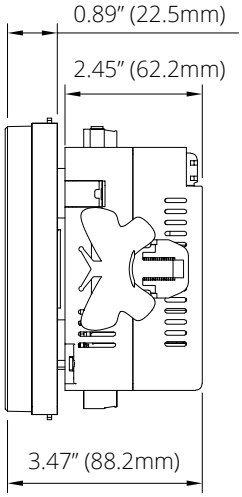

Top View

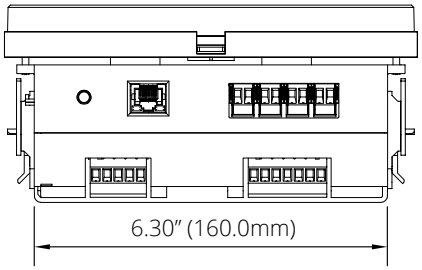

Bottom View

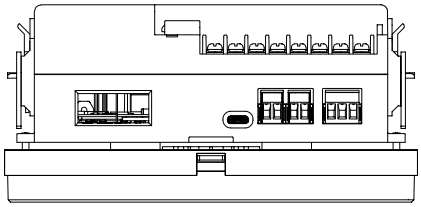

Acuvim 3 Remote Display Dimensions

Front View

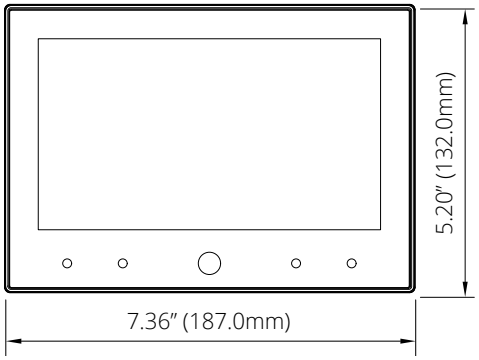

Rear View

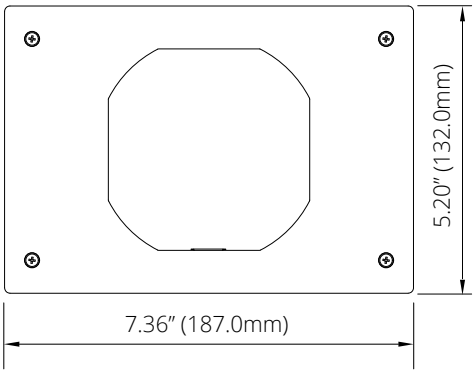

Side Views

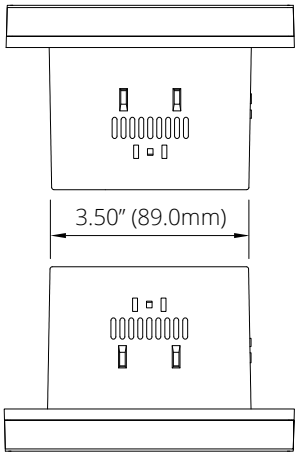

Bottom View

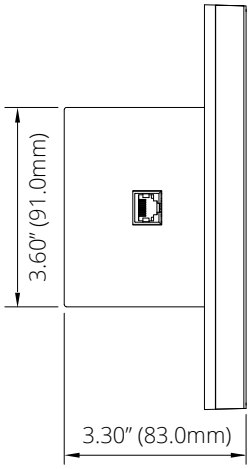

I/O Module Dimensions

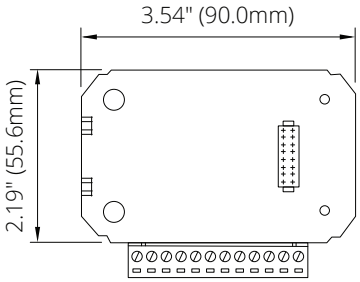

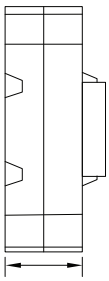

WIRING DIAGRAMS

Typical Wiring With 5A/1A CTs

1 Element 2 Wire

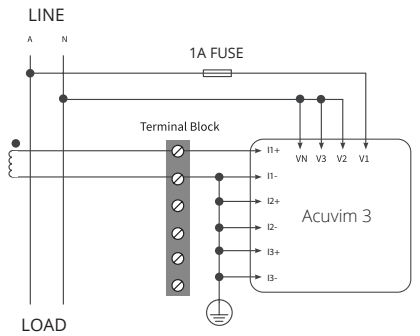

2 Element 3 Wire 1 Phase

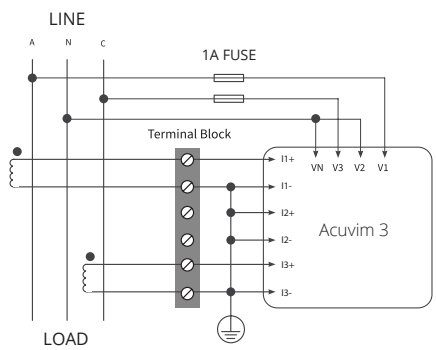

2 Element 3 Wire Delta - 3CT

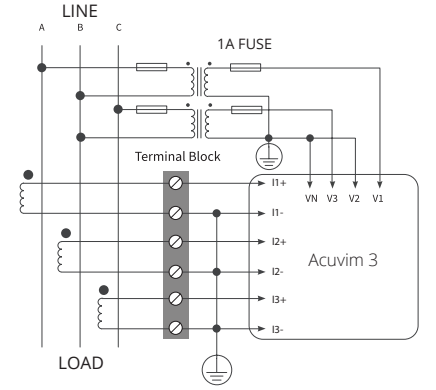

2 Element 3 Wire Delta - 2CT

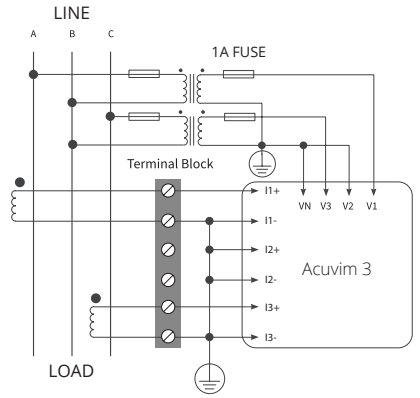

3 Element 4 Wire Y

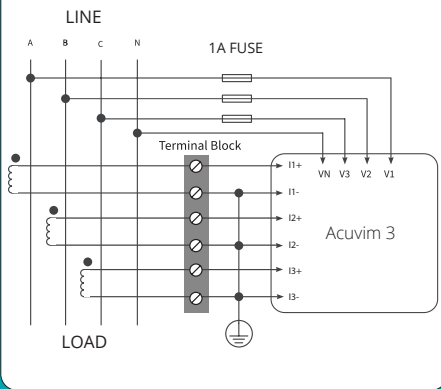

I/O Module Wiring

AXM-IO1

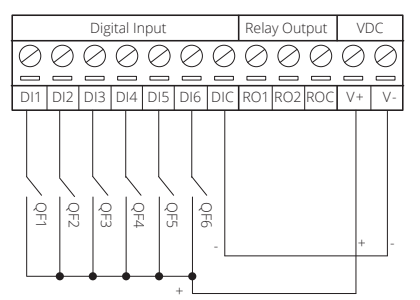

AXM-IO2/IO3

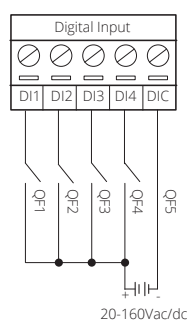

Relay Output (RO) Wiring

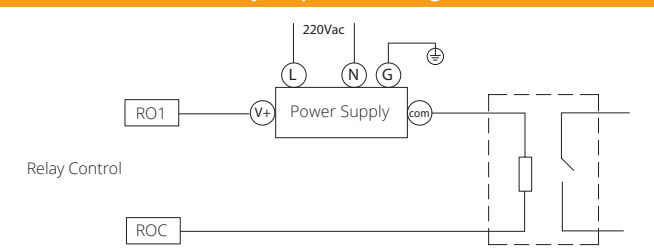

Energy Output (DO) Wiring

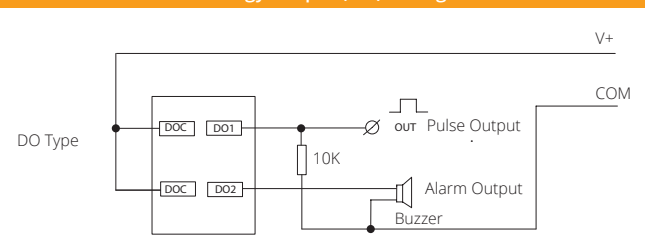

WIRING DIAGRAMS

Typical Wiring RCT/mV Current Input

1 Element 2 Wire

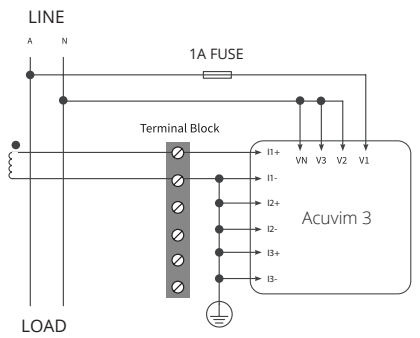

2 Element 3 Wire 1 Phase

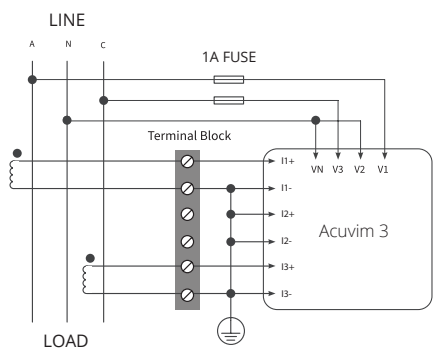

2 Element 3 Wire Delta - 3CT

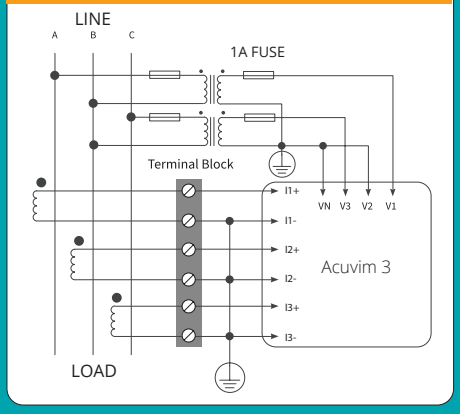

2 Element 3 Wire Delta - 2CT

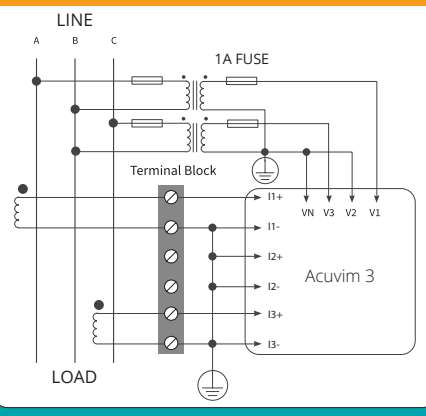

3 Element 4 Wire Y

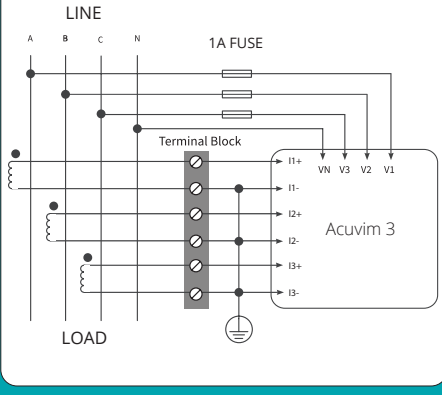

ORDERING INFORMATION

+ Meter Model	- Mounting Option	- Current Input	- Power Supply	- Measurement Canada Application
Acuvim 3: Advanced Power Quality Meter	**D**: Panel Mount with LCD Display	**5A**: 5A/1A *(Input Field Selectable)*	**P1**: 100~415Vac, 50/60Hz, 100~300Vdc	**MC**: Measurement Canada Applications
	M: DIN rail mount without LCD	**mV**: 333mV and Rogowski Coil *(Input Field Selectable)*	**P2**: 20~60Vdc	**Blank**: For other application
Ordering Example:	**Acuvim-3-M-5A-P1**			
	Acuvim-3-D-5A-P2-MC			

Note: The Acuvim 3 Measurement Canada certified meters do not support current inputs in millivolts (mV) option.

+ I/O Module *(Optional)*	- Logic Module	- Input/Output Type
AXM-IO1	**1**	
	2	
Ordering Example:	**AXM-IO1-1**	
AXM-IO2	**1**	**A**: 4~20mA
AXM-IO3	**2**	**B**: 0~20mA
		C: 1~5V
Note:		**D**: 0~5V
Ordering Example:	**AXM-IO3-1B**	

+ Accessories *(Optional)*	
Acuvim 3 Remote LCD Display	ACUVIM-3-REM-DISP

Note:
1. Refer to the I/O Module table.
2. Acuvim 3 support up to 3 external I/O modules.
3. No more than 2 of the same I/O modules may be attached to the meter (e.g. two AXM-IO2). The same two I/O modules must have a different logic number.

Accuenergy Inc.
Los Angeles - Toronto - Pretoria
North America Toll Free: 1-877-721-8908
Web: www.accuenergy.com
Email: marketing@accuenergy.com

Revision Date: November 2024 Version: 1.0.6
Specs Subject To Change Without Notice.

ISO 9001, 14001 & 45001 Certified