# PEACEMAKING REFLECTION GROUP

OF FORMER UN SYSTEM STAFF

SUPPORTED BY THE

FOUNDATION FOR GLOBAL GOVERNANCE AND SUSTAINABILITY

25 September 2023

# "Nuclear facilities as military targets – the Zaporizhzhia case"

Alejandro Zurita

FOGGS | Foundation for Global Governance and Sustainability

- International regimes
- Zaporizhzhia needs to be protected / International Atomic Energy Agency (IAEA)
- Safety and security standards for nuclear facilities in armed conflicts
- Scenarios and perspectives

# Military operations on nuclear facilities

- **Iraq, 1981**: Nuclear research reactor Osirak (French Osiris class) destroyed by airstrikes – operation 'Opera'

- **Iran, 1987**: Two reactors under construction at the Bushehr NPP (Siemens-KWU) bombarded during the Iraq-Iran war

- **Slovenia, 1991**: Military actions at the site of the Krško NPP (Westinghouse-700) during the Slovenian Independence war

- **Ukraine, 2022**: Military actions and bombardments affecting different nuclear installations and infrastructures:
  → Research centres NSC-KIPT (Kharkiv) & KINR (Kyiv)
  → Zaporizhzhia NPP & other three NPPs also affected

# Main nuclear installations in Ukraine

15 reactors in 4 active NPPs producing electricity (55% en 2021) and heating:

- Rivne NPP (4 reactors = 2.657 MW)
- Yuzhznoukrainsk NPP (3 reactors x 950 MW = 2.850 MW)
- **Zaporizhzhia NPP (6 reactors x 950 MW = 5.700 MW)**
  → produced 27% of the Ukrainian electricity
  → essential for electrical supply of Crimea and Donbass
- Khmelnitski NPP (2 reactors x 950 MW = 1.900 MW) + 2 u.c.
- *Chornobyl NPP (4 reactors out of service – militarily intervened in the period 24/2 to 31/3/22)*

Main nuclear research centres (NASU):

- **National Science Center - NSC-KIPT (Kharkiv)**
- **Institute for Nuclear Research / VVR-M - KINR (Kyiv)**
- Institute for Safety Problems of NPPs (Chornobyl)
- Nuclear Energy Systems Ukraine (Revkomivska Mykolaivka)

# NSC – KIPT (Kharkiv)

(Bombarded on >=06/3 and 25/6/2022)

06/03/2022

Shelled Neutron Source in KIPT

- the installation is switched to long stop mode
- the power supply substation destroyed
- in some places the cladding is damaged

26/03/2022 **Institute of solid state physics of KIPT**

*(EUROfusion)*

# Internacional regimes (1/3)

- **1949 Geneva Conventions**

  The 1977 **Additional Protocol I** refers to international armed conflicts and in its article 56 addresses restrictions on the protection of facilities with potential to damage population

  → The Russian Federation withdrew in 2019 its previous ratification in 1989 of that Protocol

  → Among other few countries, the USA never ratified that Protocol and explicitly rejects that Article 56 in the Law of War Manual of the US Department of Defence

- The 1979 **IAEA Convention on the Physical Protection of Nuclear Material and Nuclear Facilities**, amended in 2005, criminalises illicit trafficking and sabotage of nuclear materials or nuclear facilities but not cover military attacks on nuclear facilities either

# Internacional regimes (2/3)

- The **2019 IAEA General Conference** already addressed the need to prohibit armed attacks on nuclear facilities

- Recent attempts to move in this direction failed:

  → 08/2022: the **Nuclear Non-Proliferation Treaty Review Conference** tried to prohibit nuclear facilities from becoming military targets, <u>including scenarios with change of control of disputed territories</u>

  → 09/2022: A resolution voted at the **2022 IAEA General Conference** on the risk of fighting in Ukrainian NPPs was rejected by Russia and other countries considering Zaporizhzhia NPP located in a Russian province

- All this points a certain legal vacuum, so that **attacking a nuclear facility may formally not be illegal**

# Internacional regimes (3/3)

- **The 2023 IAEA General Conference starts today (Vienna, 25-29/9/2023)**

Positive examples to the world:

- India-Pakistan (1988) **'Non-nuclear Aggression Agreement' Treaty** refrained each party from "undertaking, encouraging, or participating in, directly or indirectly, any action aimed at causing destruction or damage to any nuclear installation or facility in each country"

- Brazil-Argentina (1991): **ABACC** 'Brazilian-Argentine Agency for Accounting and Control of nuclear materials', as unique binational organisation for nuclear safeguards

# Zaporizhzhia NPP

(Six VVER-1000 reactors produced 27% of Ukrainian electricity)

*(Energoatom)*

# Zaporizhzhia needs to be protected (1/6)

Even when not producing electricity, the plant also **needs supply of electricity** I order to operate safety systems and perform maintenance works

- Since 07/8/2022 **only 1 line of 750 kV** remains operative ~~(out of 4 lines before the war)~~
- Since 01/3/2023 no support lines of 330 kV were available, and since 03/7/2023 **only 1 support line** remains operative ~~(out of 6 support lines before the war)~~
- The original 13 emergency diesel generators (EDGs) were increased to 20 EDGs, ensuring up to 23 days of emergency operation

# Zaporizhzhia needs to be protected (2/6)

The stability of the electrical network and certain substations were affected by war actions

- On 08/10/2022 a **total loss of off-site power** occurred for the **first time in 37-year lifetime** of Zaporizhzhia NPP
  → the cooling of reactors and fuels was exclusively based on those emergency diesel generators EDGs

- Since then, similar loss of off-site power occurred **seven times** (6th time >09/3/2023 and 7th time on 22/5/2023)

- On 23-24/11/2022 **all four Ukrainian NPPs simultaneously** suffered loss of off-site power due to too low frequency in the power network

- Similar situation took place in **Chornobyl NPP** on 09-14/3/22

# Kakhovka dam

Rebuilt in 1956 (3850m x 16m) – surface 2155 Km²
Hydroelectric power plant of 357 MWe
Water reservoir for Zaporizhzhia NPP, 128 Km upstream

*(Reuters)*

# Destruction of the Kakhovka dam

(destroyed on 06/6/2023)

*(Agencies)*

# Zaporizhzhia needs to be protected (3/6)

- The **Kakhovka dam**, which guaranteed as large reservoir the cooling water of the plant located 128 km upstream, was destroyed on 06/06/2023 with **human and environmental disaster**, and leaving the cooling pond of the Zaporizhzhia NPP as last resource for cooling the plant
  → There is **no imminent loss of cooling**, but a risk remains

- The structural integrity of the pond (by design higher than the reservoir) has been now reinforced to prevent leaks or collapse
  → The pond is kept filled by new wells drilled on the site and by the discharge from the DRES thermal power plant in Energodar
  → A stable pond **can supply water to the plant for months**

- There are also **new emergency procedures** to cool the plant by other means developed after the Fukushima accident (see ENSREG slide)

# Cooling pond of Zaporizhzhia NPP

*(Google Maps)*

# European Nuclear Safety Regulators Group (ENSREG)

- After the Fukushima accident caused by a tsunami (2011), all EU plants, **plus Ukraine** and Switzerland, carried out **nuclear stress tests** supervised by ENSREG, to evaluate and if needed to reinforce  safety systems against extreme external events

- Ukraine developed a **National Action Plan** (2013) updated in 2015/17/20 to strengthen safety systems against extreme events, including the breach of the Kakhovka dam

- Art.5 of National Action Plan deals with **a long-term cooling without power supply**: emergency procedures were expanded with new equipment available, such as mobile vehicles and pumping boats and submersible pumps

# Fuel assembly of VVER-1000

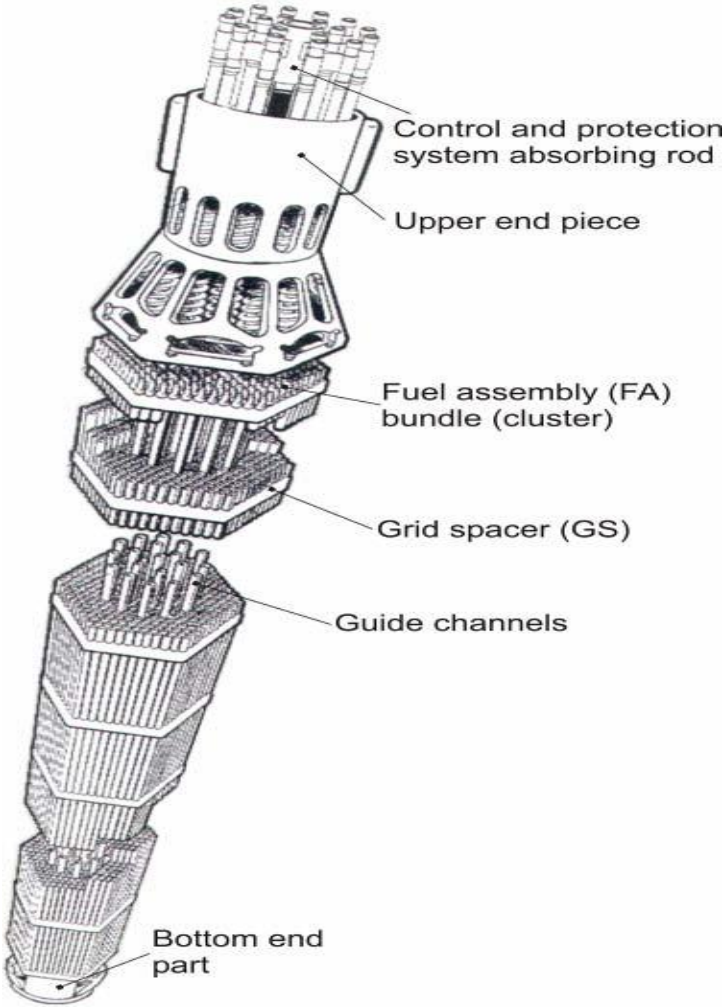


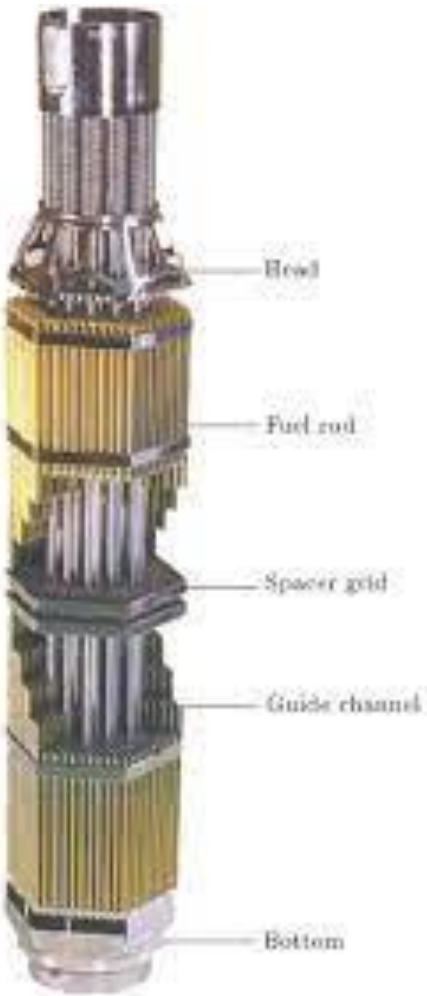


*(Google)*

# Fuel assembly & VVER-1000 core

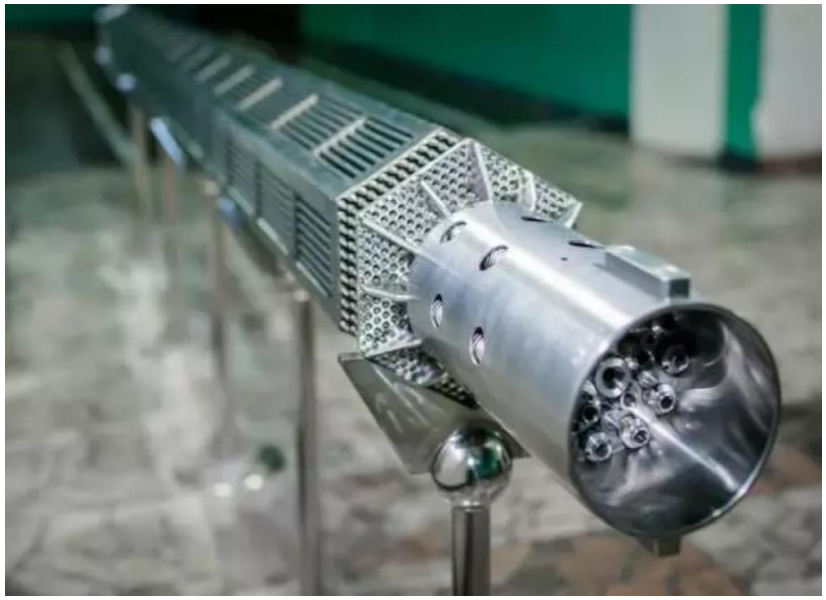

*Google)*

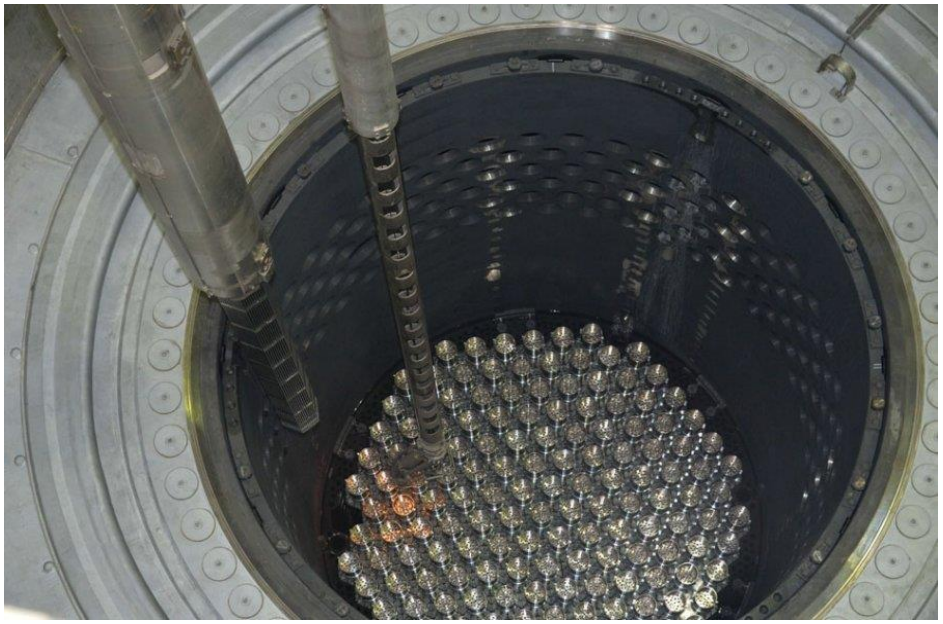

# Zaporizhzhia needs to be protected (4/6)

- A main risk would be not being able to cool irradiated fuels due to **lack of power supply or insufficient water reservoir**

- If irradiated fuels could not be sufficiently cooled, such lack of coolant would cause **fuel meltdown accident** with release of radioactive products (accident INES* ≥4: damage to reactors; radioactive release), which could have a transboundary and indiscriminate impact affecting various countries

- It would mean an accident situation **close to a Fukushima-type scenario**, although with the **mitigating factor** of a much lower residual heat of the fuels to be cooled, after the shutdown of the six reactors one year ago, on 11/09/2022

**) INES: Internacional Nuclear Event Scale*

# Zaporizhzhia needs to be protected (5/6)

- **Enerhodar suffered restrictions and recently also drone strikes** (7,11/9/2023) – Present reduction to one third of plant staff and to 25% of maintenance staff

- The plant continues to be operated by Ukrainian personnel plus new Russian operators under control by Rosatom, which proposed **Ukrainian operators to sign contracts** to keep their jobs, against the advice of the Ukrainian Energoatom

- **Uncertain responsibilities for safety and for emergency scenarios**, e.g. intended criticality at the Z-5 reactor or current hot shutdown operation of Z-6 reactor, both against regulatory orders of the Ukrainian SNRIU

- Despite very professional performance of stressed operators, the described insecurities make difficult to perform **in-service inspections and maintenance tasks** and may affect safety culture at the plant

# Zaporizhzhia needs to be protected (6/6)

- Risk of further **direct impacts, explosions or sabotage** on relevant installations:
  - → Electrical systems supplying safety systems
  - → Irradiated fuel & radioactive waste storage facilities/buildings
  - → Cooling pond and related cooling equipment

- **Direct bombardments** to Zaporizhzhia NPP facilities (non-irradiated fuel and solid waste storage on 05-07/8/2022 )

# Zaporizhzhia installations

(Added physical protection at irradiated fuel storage, 23/12/2022)

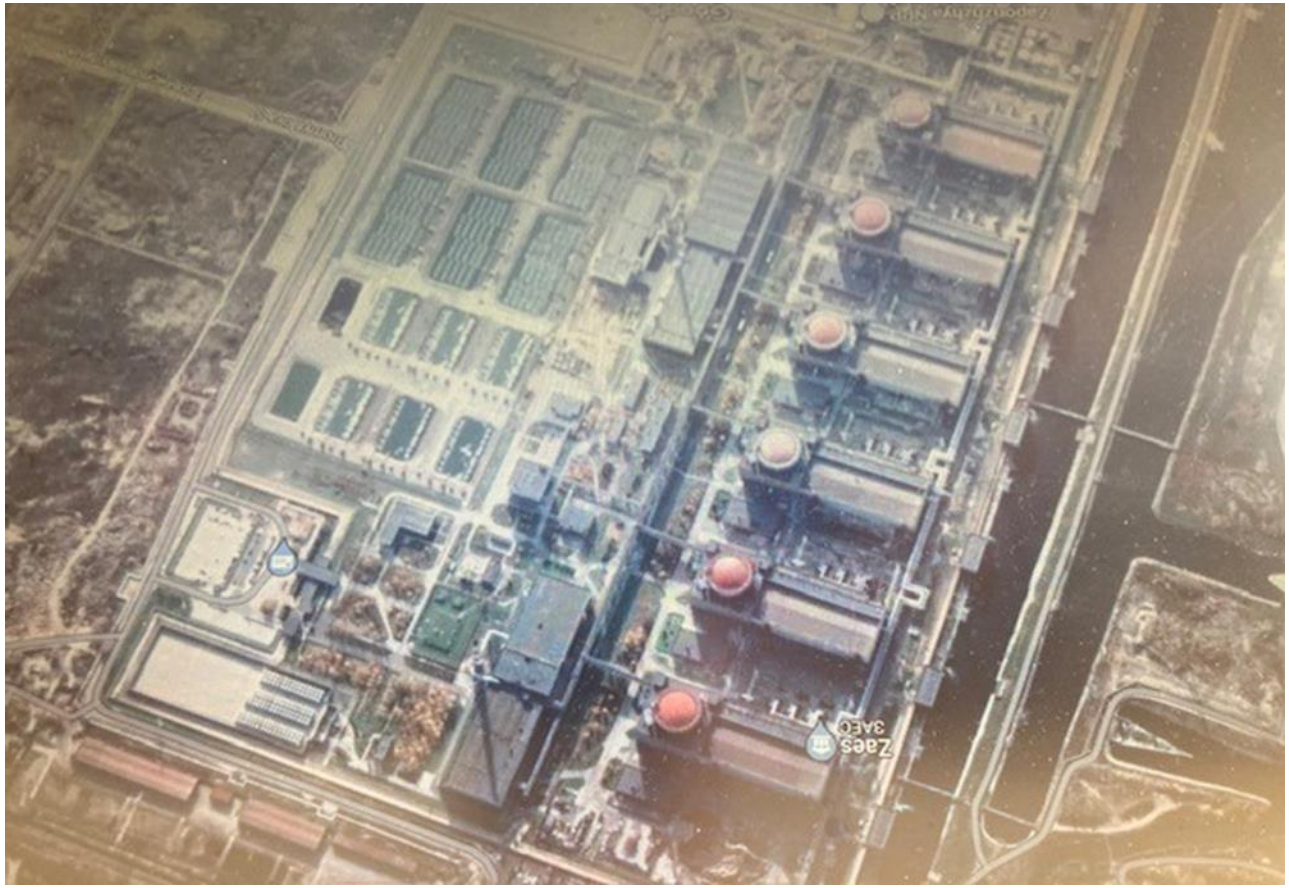


*(Google Maps)*

# Fragility of the Zaporizhzhia NPP

*** Reduction in safety levels and margins**

- **Lack of power supply or insufficient cooling** put the plant safety at risk
  → Seven times under loss of off-site power operation
  → Presently, only 2 high voltage lines -out of 10- are available
  → After destruction of the Kakhovka dam, the cooling mainly depends on the structural integrity of the cooling pond
- **Dubious capacity to fully carry out** all in-service inspection and maintenance programs, due to significant reduction in personnel and external contractors, and shortages of specific spare parts

*** Risk of explosions, direct bombings or sabotage** affecting relevant and essential equipment and facilities

# **IAEA** (1/2)

- The first IAEA Support and Assistance Mission arrived in Zaporizhzhia on 09/07/2022, establishing **monthly shifts of nuclear safety inspectors**
  → Since January 2023, the IAEA has also inspectors in the other four Ukrainian plants

- Although limited, the IAEA inspectors' presence and action on the site **protects and helps Zaporizhzhia** and brings clarity by informing the world of its situation, especially at a time of unverified mutual allegations
  → **full access of IAEA inspectors** to all equipment and systems is required

- By mid-2023, the IAEA made 19 supplies of diverse equipment for the plant and electrical networks to reduce the possibility of accidents

# **IAEA** (2/2)

- DG Grossi continues to negotiate and **seek consensus at the highest level** between the parties with his latest meetings in Kyiv on 13 June and in Kaliningrad on 23 June 2023

- The IAEA expects greater engagement and support from the international community

- In 2005 IAEA was awarded the Nobel Peace Prize "for his continued work for a safer and more peaceful world"

  → Efforts to dismantle arguments on the weapons of mass destruction and to avoid war in Iraq (2003)
  → Safeguards of civil nuclear facilities
  → International safety and security standards plus nuclear applications (health, agriculture) in all UN countries
  → JCPOA nuclear agreement (between Iran and EU, USA, RU, UK, CN, FR, DE)

# Safety and security standards for nuclear facilities in armed conflicts (1/4)

- The military actions at Krško NPP in 1991 already led to **assessments of various technical functions** (fuel cooling, (subcriticality, containment integrity, radiological inventory...)

- However, that work could not be used then as a basis for developing IAEA guidance for war contexts, since **the IAEA mandate does not consider military installations and armed conflicts**

# Safety and security standards for nuclear facilities in armed conflicts (2/4)

With the outbreak of the war, on 2/3/22 the IAEA recommended:

- Establishment of **seven pillars of nuclear safety & security:**
  1. physical integrity of all facilities
  2. full functioning of all safety and security systems
  3. working conditions and ability of operators to perform their duties and make decisions without undue pressure
  4. ensuring external power supply
  5. ensuring logistical supply and transportation to the site
  6. effective radiological monitoring and emergency preparedness
  7. reliable communication with the nuclear regulator
- The urgent establishment of a **safety protection zone** around Zaporizhzhia NPP

- **All pillars are unfulfilled** and there is **no agreement on the safety protection zone** between parties

# Safety and security standards for nuclear facilities in armed conflicts (3/4)

- Due to the impossibility of creating the safety protection zone, the UN Security Council endorsed on 30/5/2023 the **five principles essential for averting a catastrophic incident at Zaporizhzhia NPP**, that were established by the IAEA:

  1. No there can be no attacks of any kind <u>from or against the plant</u>, in particular directed to reactors, irradiated fuel storage, critical infrastructure or personnel
  2. The plant cannot be used as <u>storage or seating for heavy weaponry or military personnel</u> that could be used for an attack from the plant
  3. The <u>external power supply</u> cannot be placed at risk and must be secured at all times
  4. All structures, systems and components essential to safety must be <u>protected from attack or sabotage</u>
  5. No action that undermines these principles must be taken

# Safety and security standards for nuclear facilities in armed conflicts (4/4)

- On 26/7/2022 the IAEA established a **working group** that has met 8 times aimed to review the application & adaptation of its safety and security standards in armed conflicts

- Based on that work, IAEA Safety Standards Committee (CSS) mtg (23-26/5/2023) agreed to **publish a TECDOC** to guide the international community to be updated as events unfold at Zaporizhzhia. It will concern the practical applicability of current standards, shortcomings or challenges in application
  **→ Next CSS meeting planned on 28-30/11/2023**

- The seven pillars of nuclear safety and security together with the five principles of protection for Zaporizhzhia also serve as elements for developing standards and guidance by the IAEA Safety Standards Committee

# Scenarios and perspectives (1/3)

- For the first time in history, a nuclear power plant has become a military objective in the frontline of a war

- Urgent need for a **ratified global Convention or Treaty** on non-aggression against nuclear facilities
  → **to prevent normalization of potential future attacks**
  → to delegitimate any warlike action
  → to deny the possibility of justifying any action

- Damage to the credibility of nuclear power. If conventional nuclear fission power should continue producing electricity for the world, the **challenge for the international community** is to ensure that its facilities remain strictly outside of any armed conflict

# **Scenarios and perspectives** (2/3)

- The decrease in safety margin and levels (power supply, cooling, reduced personnel…) and the risk of explosions, makes the operation in Zaporizhzhia **unsustainable in the medium term**

  → **full access of IAEA inspectors** to all equipment and systems is required
  → Zaporizhzhia is in a kind of grace period, which is not infinite (IAEA DG Grossi dixit)

- Despite technical professionalism of the operating staff, Zaporizhzhia is moving "in slow motion" towards a **possible nuclear accident** with potential indiscriminate and cross-border radiological impact, escalating the dimension of the war

  → International community must be able to act now before it happens

# Scenarios and perspectives (3/3)

- In the same way that Chornobyl promoted further nuclear safety standards and Fukushima different nuclear safety action plans, this war **should legitimize the IAEA** to control and support nuclear facilities in armed conflicts
  → Possible reconsideration of the **IAEA mandate**
  → Coming TECDOC on assessments of the current WG

- Consideration to place nuclear facilities under **international control in war contexts** and to identify **responsibilities for nuclear safety and security**, particularly in cases of a "hijacked" facility as the case of Zaporizhzhia

- **Nuclear security risks and priorities** should be reevaluated
  → hostile actions by state actors against nuclear facilities
  → establishment of nuclear safety and security protection zone

## Many thanks for your attention !

**“Cossacks are writing a letter to the Turkish sultan”**

Ilyá Repin (1844-1930) – ‘Russian Museum’ Saint Petersburg

203 cm x 358 cm