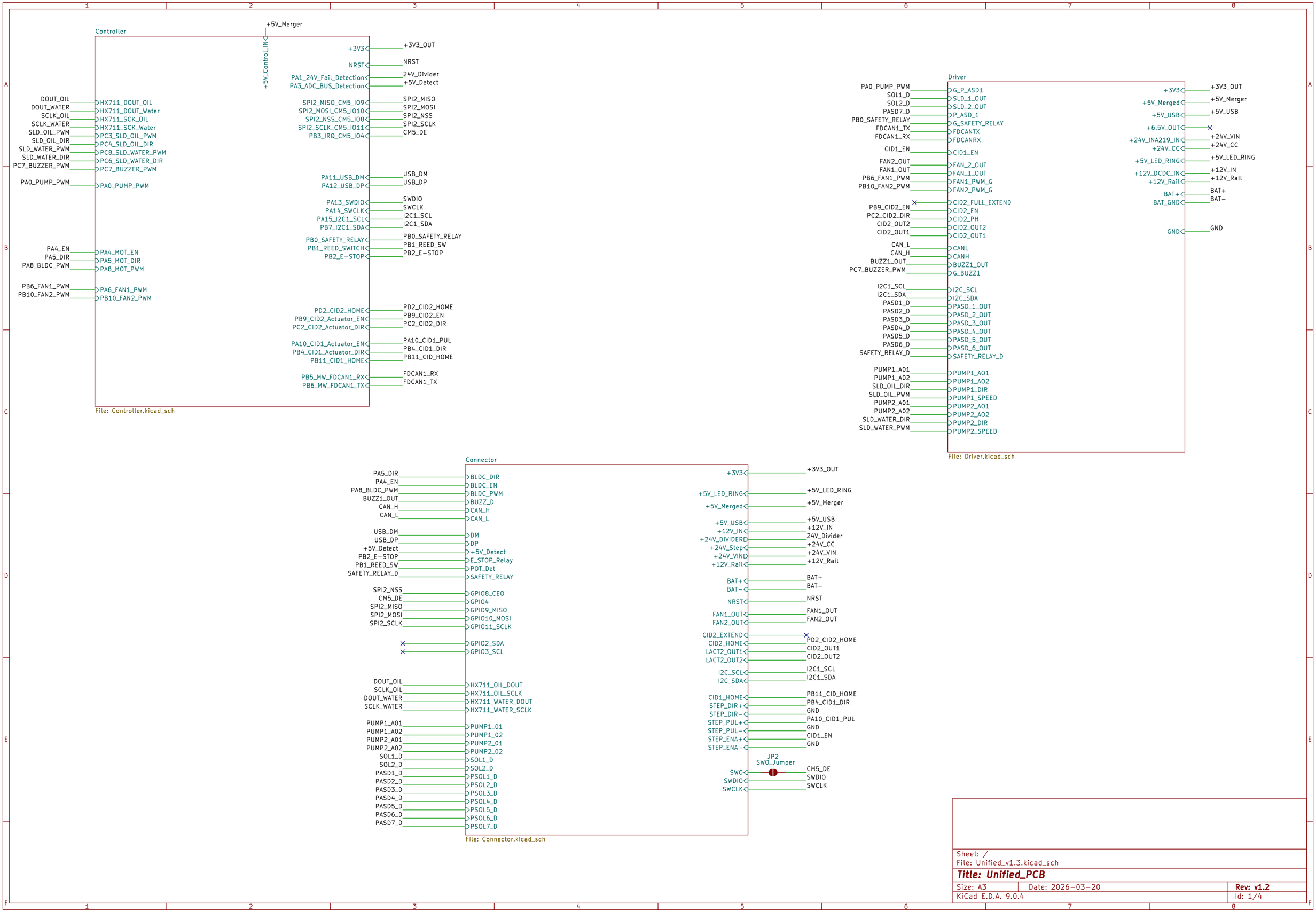

Sheet: /
File: Unified_v1.3.kicad_sch

Title: Unified_PCB

Size: A3	Date: 2026-03-20	Rev: v1.2
KiCad E.D.A. 9.0.4		Id: 1/4

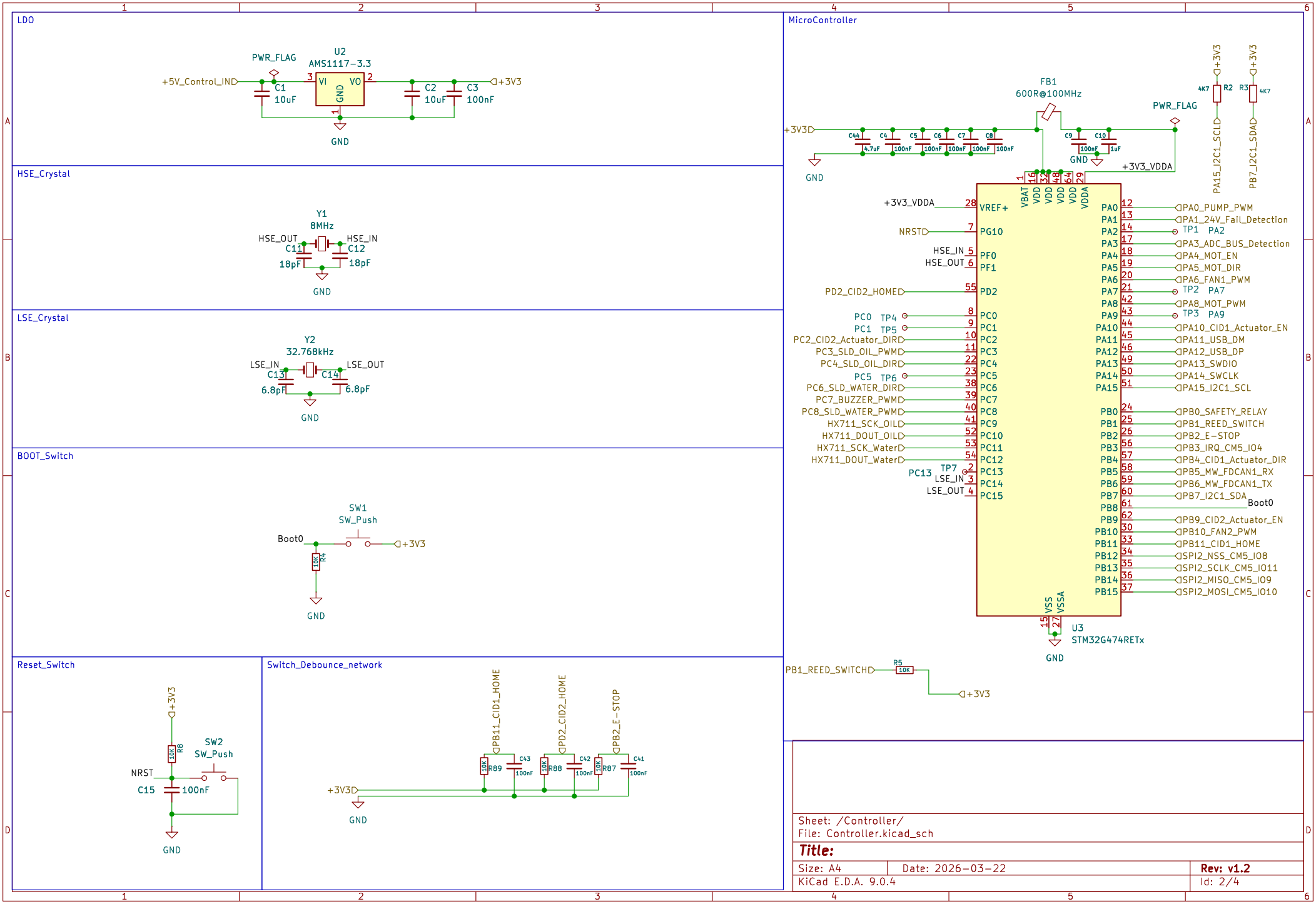

Sheet: /Controller/
File: Controller.kicad_sch

Title:

Size: A4	Date: 2026-03-22	**Rev: v1.2**
KiCad E.D.A. 9.0.4		Id: 2/4

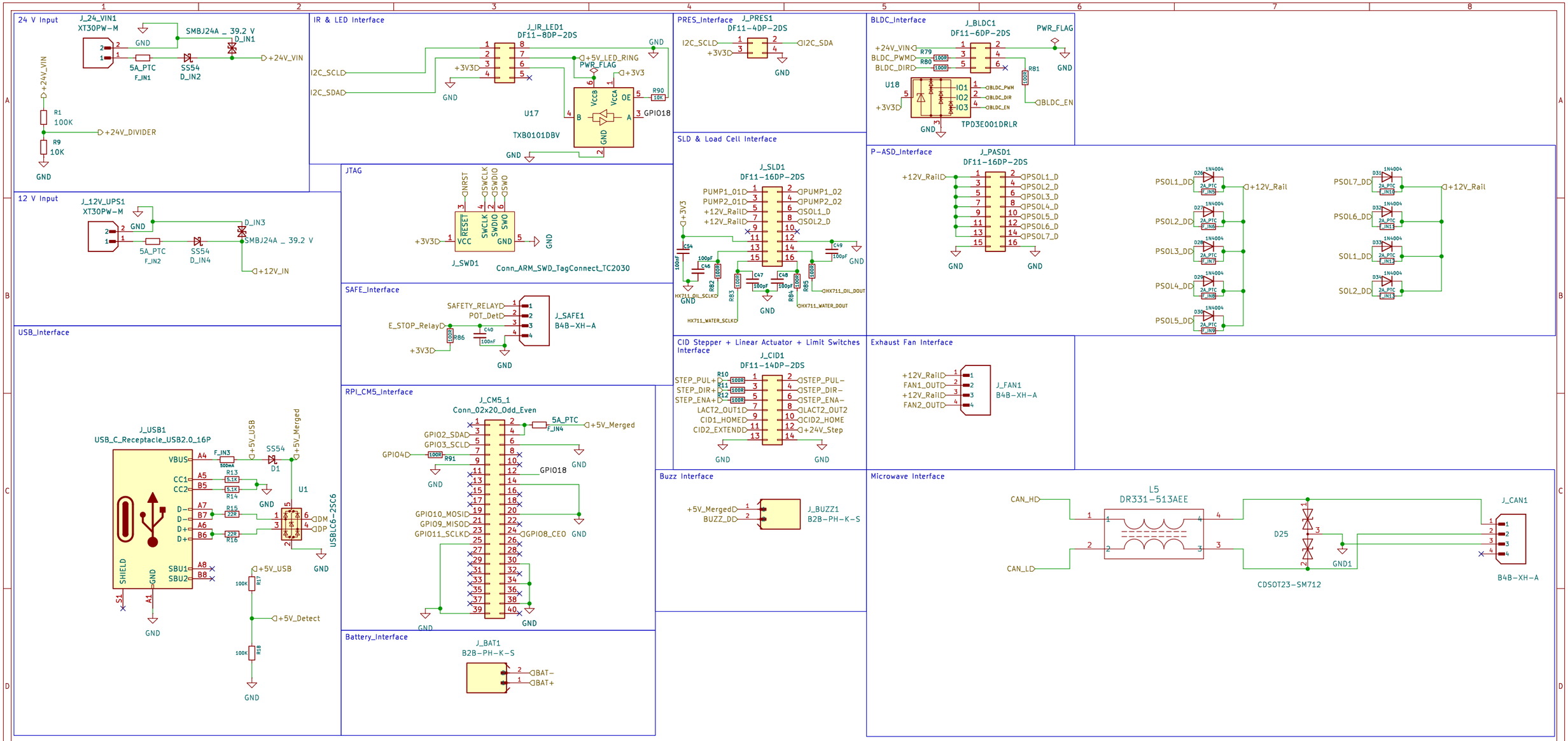

Sheet: /Connector/
File: Connector.kicad_sch

Title:

Size: A3	Date: 2026-03-22	**Rev: v1.2**
KiCad E.D.A. 9.0.4		Id: 3/4

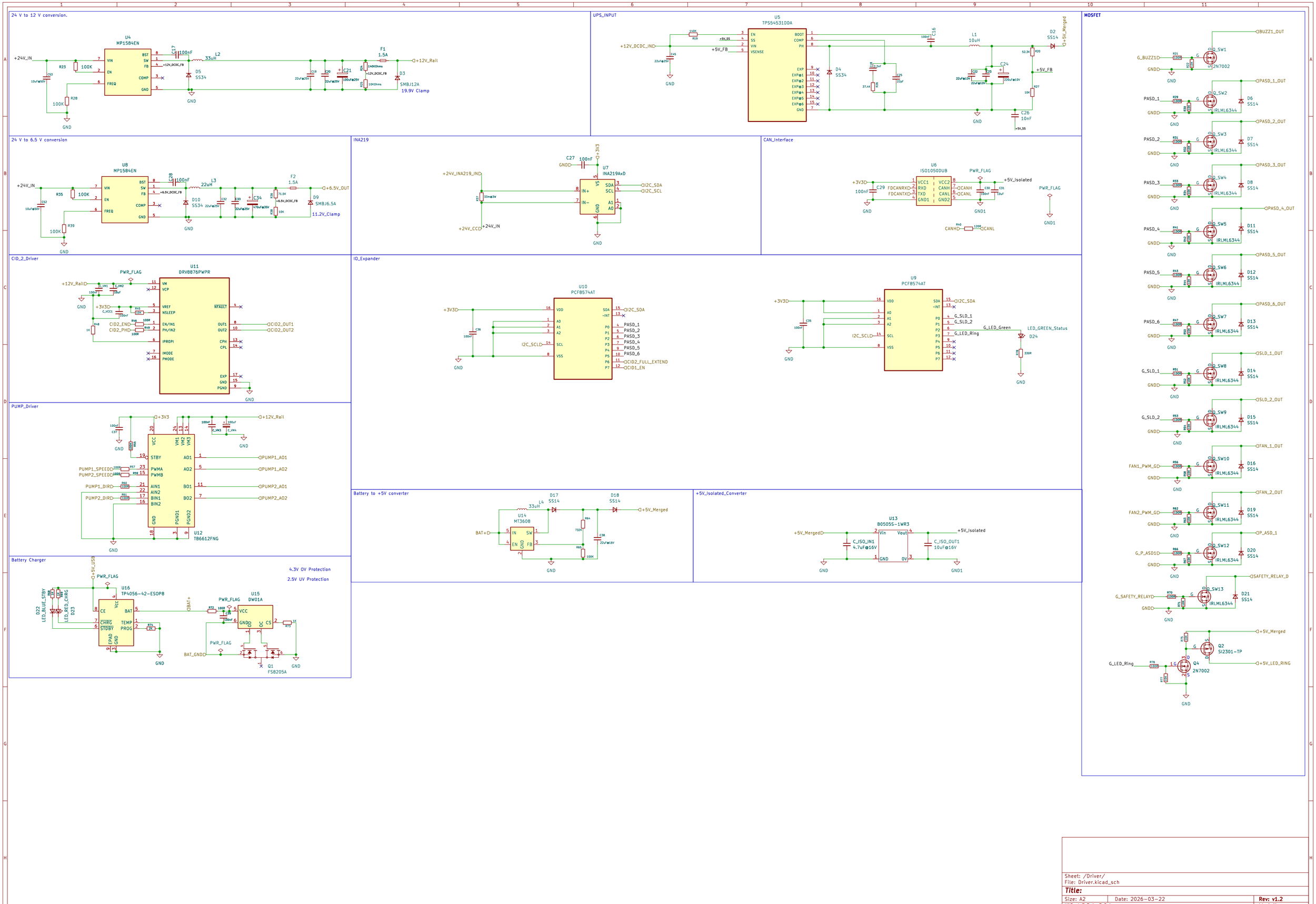

Sheet: /Driver/
File: Driver.kicad_sch

Title:

Size: A2	Date: 2026-03-22	Rev: v1.2
KiCad E.D.A. 9.0.4		Id: 4/4