ANC

ANALOG
CIRCUITS
PROJECT

Active Noise Cancellation

Using Analog Circuits

Problem Statement

How can unwanted ambient noise be effectively cancelled in real time while preserving the desired audio signal?

Done by: Group -3
Snehal Benade
Anshika Yadav
Arushi Bhati
Manasi Saxena
Muskan Kumari

02

Introduction to Active Noise Cancellation

Active Noise Cancellation (ANC) reduces unwanted sound by generating a “mirror” wave that is equal in amplitude but opposite in phase to the noise signal

Working Principle

Noise Signal + Anti-Noise Signal → Reduced Sound

Destructive Interference: When two waves with a 180° phase difference combine, they cancel each other.

Core Logic: Noise Signal + Anti-Noise Signal → Reduced Sound

Basic System Components

Microphone: Detects and monitors ambient noise.

Processing Circuit: Generates the inverted anti-noise signal.

Speaker: Emits the anti-noise signal into the environment

Applications

1.Noise-cancelling headphones and wearable tech

2.Automotive cabins and aircraft interiors

3.Industrial noise control and machinery

03

Motivation for Noise Cancellation Systems

Traditional noise control relies on passive methods like foam or barriers. While effective for high frequencies, these materials are often too bulky for low-frequency noise.

The Low-Frequency Challenge

- Bulky Passive Materials
- Compact ANC Solution (<1000 Hz)
- Passive materials must be large and heavy to block low frequencies.
- ANC provides a compact solution for noise <1000 Hz.

Growing Noise Pollution

- Increasing noise from urban environments, transport, and industry.
- Chronic noise exposure leads to stress, fatigue, and lower productivity

The ANC Advantage

- **Compactness:** Ideal for lightweight, portable electronics.
- **Real-Time:** Adaptive control adjusts to changing sounds instantly.
- **Efficiency:** Solves acoustic problems where passive methods fail.

04

Literature Overview

Budnik & Mees (2025)

- Developed a **3D Finite Element (FE)** simulation framework for ANC.
- Allows for virtual optimization of sensor and speaker placement before building hardware.
- Validated effective noise reduction in the **100–630 Hz** band.

Abukhadra et al. (2026)

- Proposed a **Hybrid Deep Learning** system for noise control.
- Utilizes a **1D Convolutional Neural Network (CNN)** to predict control parameters.
- Provides superior robustness and faster adaptation than traditional algorithms.

Current research focuses on improving ANC through advanced digital modeling and the integration of artificial intelligence

System Block Diagram

Block 1 - Pre-Amplifier Stage

Purpose: Signal conditioning of microphone input
- Microphone output is extremely weak (~1-10 mV)
- Requires amplification before processing

Configuration:
- Non-inverting op-amp
- High input impedance (prevents loading)
- Low distortion amplification

Gain Relation:
- Av = 1 + (R1/R2)

Output:
- Amplified noise signal ready for filtering

Block 2: Phase Inversion (Anti-Noise Generation)

Purpose: Create destructive interference

- Noise signal modeled as:
  $x(t) = A \sin(2\pi ft)$
- Anti-noise generated as:
  $-x(t) = -A \sin(2\pi ft)$

Key Requirement:

- Exact 180° phase shift
- Accurate timing (critical for cancellation)

Principle:

→ $x(t) + (-x(t)) = 0$

Output:

→ Inverted (anti-noise) signal

Block 3: Inverting Summing Amplifier

Purpose:
Combine signals for cancellation

Inputs:

- Noise (processed)
- Anti-noise
- Desired audio (music)

Operation:

- Summing amplifier performs weighted addition

Output Equation:
Vout = − (Vnoise + Vanti-noise + Vmusic)

Result:

- Noise components cancel out
- Desired signal preserved
- Output sent to headphones

Pre-Amplifier Design Using Op-Amps

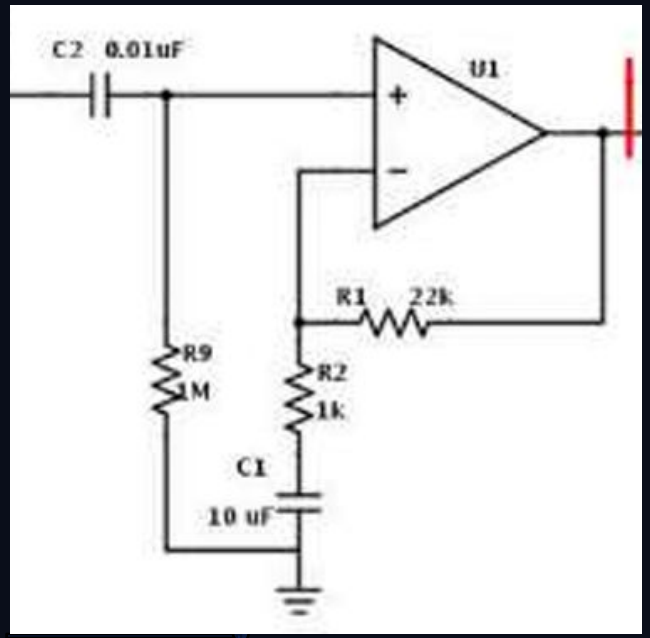

Source: Adapted from *Active Noise Cancellation: Analog Circuit*, U. Hes, Swarthmore College, 2023.

$$A_v = 1 + \frac{R_1}{R_2}$$

$$A_v = 1 + \frac{22k\Omega}{1k\Omega} = 23$$

Drawbacks

1. **No local supply decoupling**
   no bypass capacitors placed directly at op-amp supply pins; rail noise couples into amplified output.
2. **Fixed gain (23×)**
   Different microphones have different sensitivities [R2 (1kΩ) ⟹ Potentiometer]
3. **No high-frequency rolloff**
   Amplifier boosts RF noise and interference above the audio band; fix by adding 100pF across R1.
4. **Output DC offset**
   Op-amp output DC offset propagates to the next stage; fix by adding a 10μF series capacitor at the output.

07 LTSpice Simulation of Pre-Amplifier

Component	What it does
C2	Blocks DC from mic signal
R9	DC return, stops (+) floating
C3	Rolls off HF noise above audio
C5	Decouples +ve supply rail
C4	Decouples −ve supply rail
C6	Blocks DC offset at output

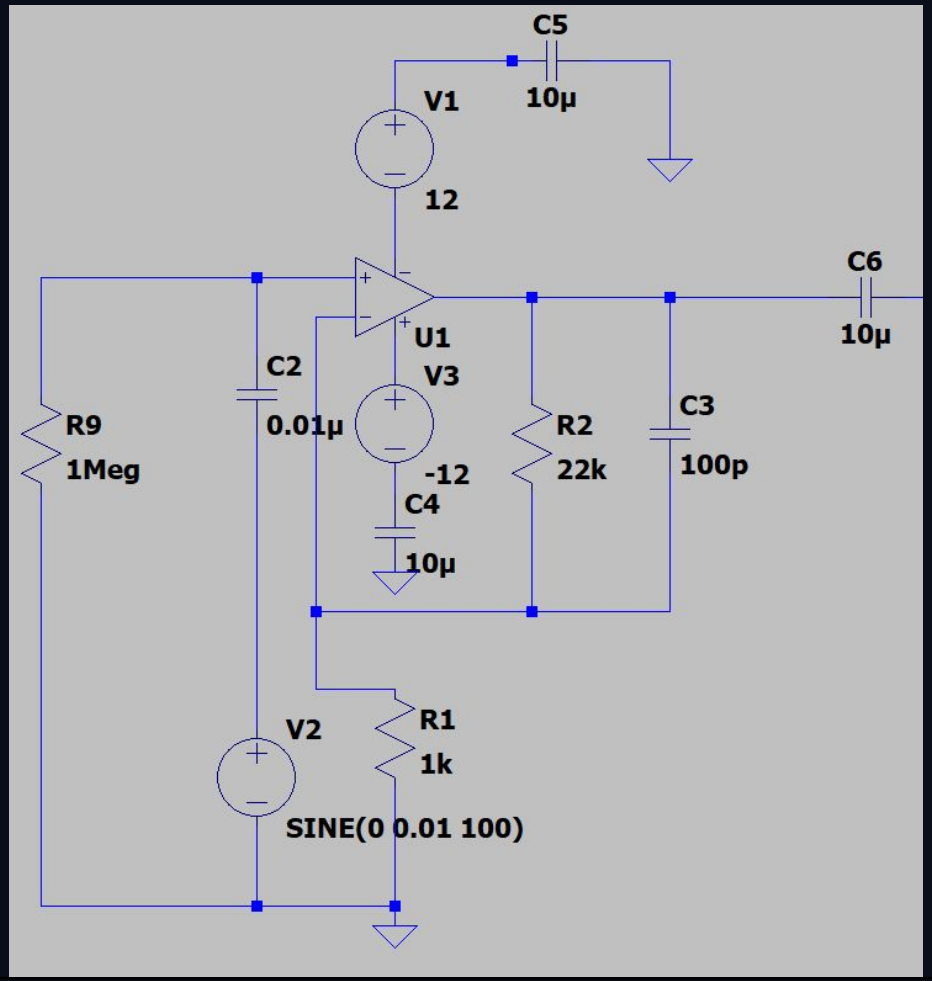

08

Understanding Results

Input Signal: Amplitude ≈ 10 mV and Frequency = 100 Hz

Gain = 23

Therefore output signal: Amplitude ≈ 230 mV

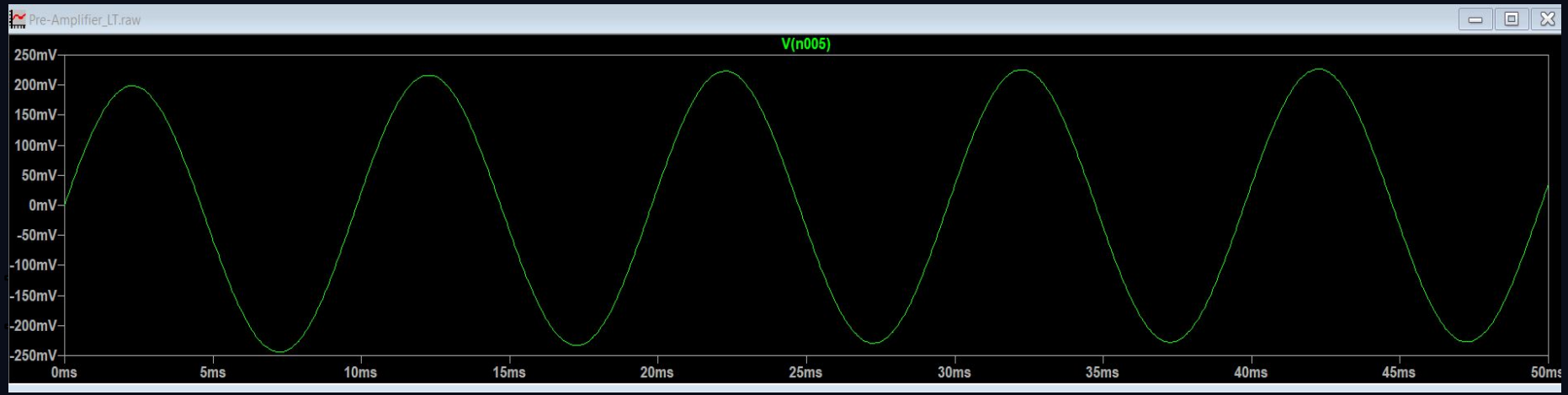

Phase Inversion for Active Noise Cancellation

Effect of Delay on Noise Cancellation

Block 2 – Phase Alignment Analysis

- In practical circuits, delay is unavoidable due to amplifiers and filters.
- Delay shifts the anti-noise signal in time.
- The anti-noise signal becomes:

$$\text{AntiNoise} = -x(t - \tau)$$

- This delay introduces phase mismatch between noise and anti-noise signals.
- Phase error increases with frequency.

$$\text{Phase Error} = 2\pi f \tau$$

This is why ANC works better for low-frequency noise.

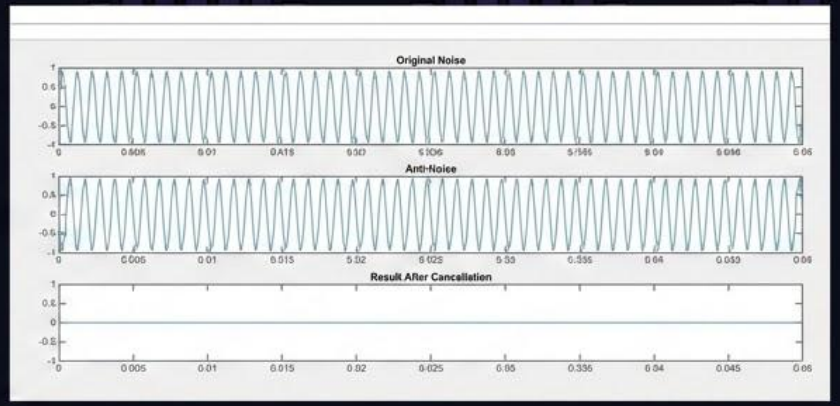

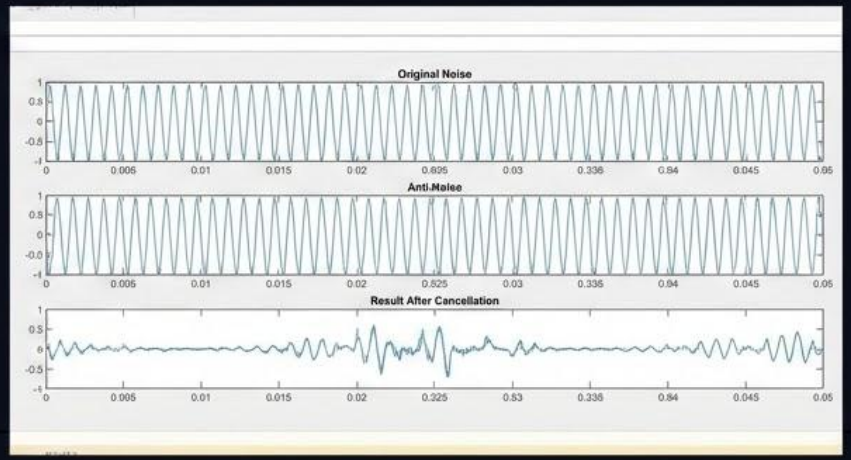

Novelty: Delay and Frequency Analysis in ANC

Phase Error Rolation
Phase Error = 2π f τ

$$\text{Phase Error} = 2\pi f \tau$$

Where
f = signal frequency
τ = system delay

• As frequency increases, the same delay produces **larger phase error**

Proposed Analysis

To study this limitation, simulation experiments were performed to analyze:

• Effect of **delay on destructive interference**
• Effect of **frequency on cancellation performance**
• Optimization using an adaptive gain factor **α**

Modified anti-noise signal:

$$\text{AntiNoise} = -\alpha\, x(t - \tau)$$

Results

Condition	Noise Reduction
Ideal cancellation	Infinite dB
With delay	~5 dB
With optimized α	~5.4 dB

Key Observation

• Delay significantly reduces cancellation effectiveness.

• Higher frequencies experience **greater phase error**.

• Adjusting the gain factor **α** improves cancellation slightly but **cannot fully correct phase mismatch**

MATLAB simulation results demonstrating delay effects and adaptive optimization in ANC”

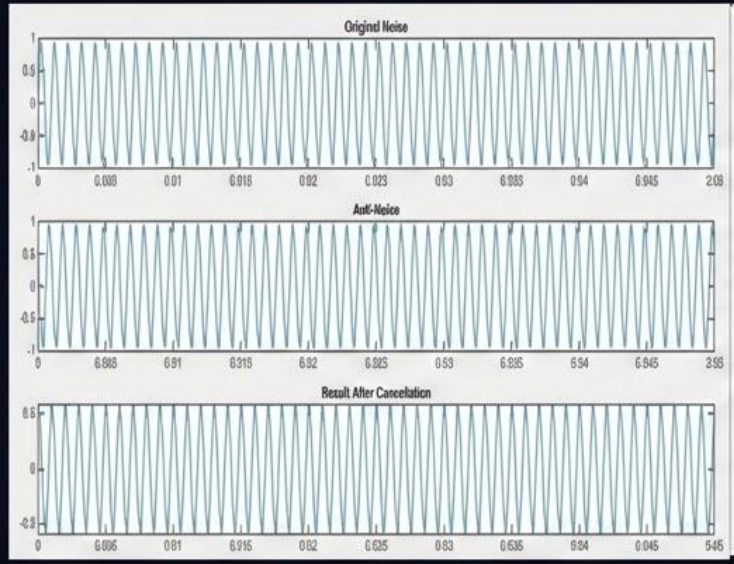

Fig 1-Residual signal observed after imperfect cancellation

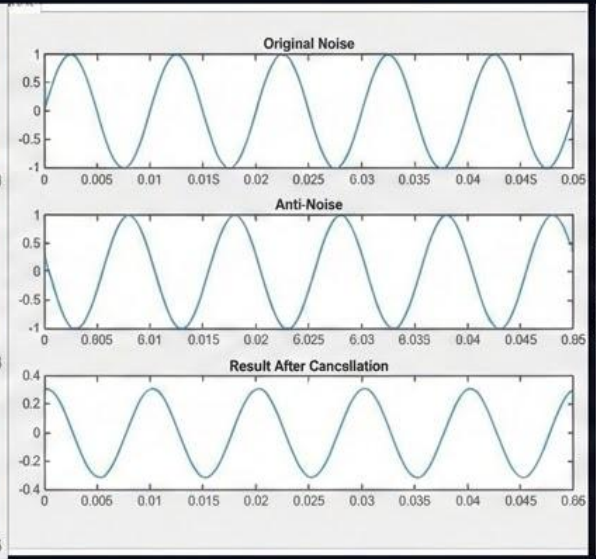

Fig 2-Frequency domain representation of residual signal(FFT of residual noise)

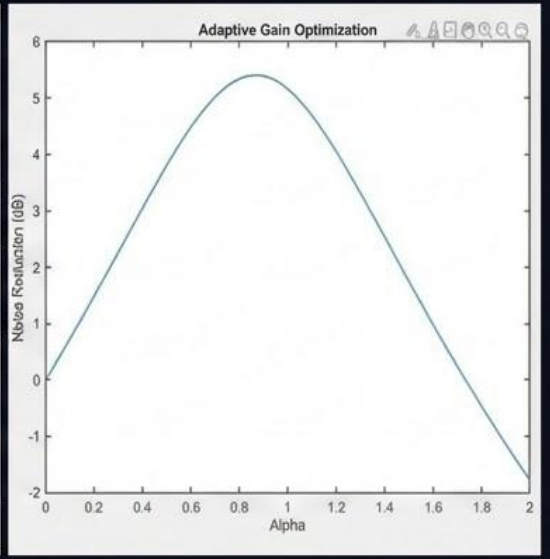

Fig 3-Adaptive gain tuning using scaling factor alpha

Operation of Phase-Inverting Summing Amplifier

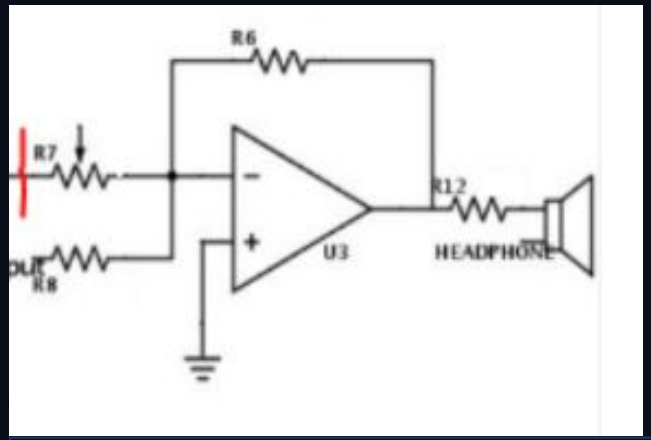

$$V_{out} = -\left(\frac{R6}{R7}V_{noise} + \frac{R6}{R8}V_{music}\right)$$

Components	Role
R6	Anti-noise gain
R7	Music gain
R8	Feedback gain
R12	protects headphones (ensures headphone volume does not exceed safe levels [85 dB])

Music Gain = $\frac{R_6}{R_8} = \frac{10\,k\Omega}{10\,k\Omega} = 1$

Noise Gain = $\frac{R_6}{R_7} = \frac{10\,k\Omega}{500\,k\Omega} = 0.02 \text{ times}$

Limitations and circuit Modifications

Limitations

1. Bandwidth limitation

Op-amps cannot amplify signals beyond their gain-bandwidth product.

2. Noise sensitivity

External noise can be amplified along with the signal.

3. Phase mismatch

Incorrect phase alignment reduces noise cancellation efficiency.

4. Component tolerance

Resistor variations affect gain accuracy.

5. Power limitations

Op-amps cannot drive high-power loads directly.

Modification

In this project, the following modification was implemented:

Addition of a Low-Pass Filter before the Summing Amplifier

Components used:

- Resistor R=10kΩ
- Capacitor C=20nF

The low-pass filter provides several advantages:

- Removes high-frequency noise
- Improves noise cancellation performance
- Stabilizes the summing amplifier stage
- Prevents amplification of unwanted signals

This ensures that the ANC system primarily processes low-frequency noise, which is easier to cancel.

14

LT Spice Simulation of Summing Amplifier

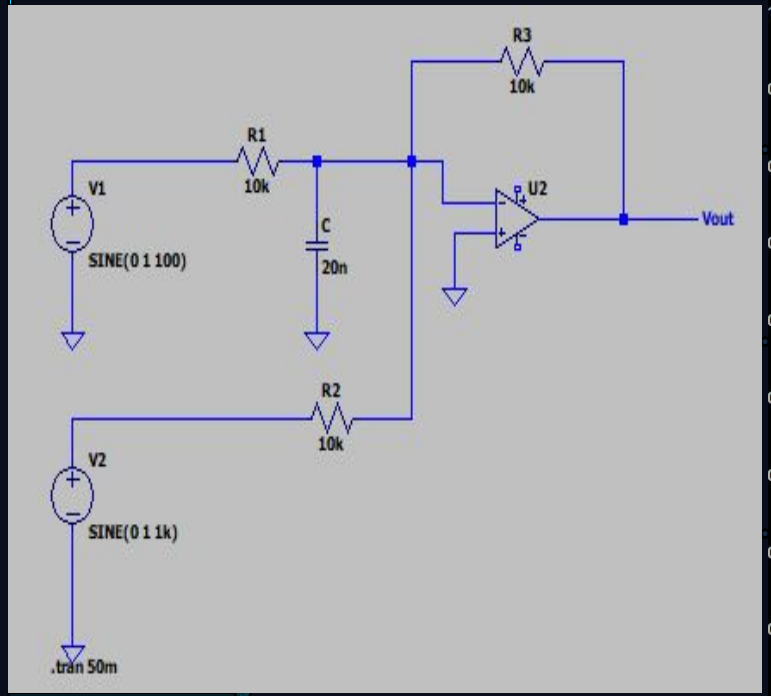

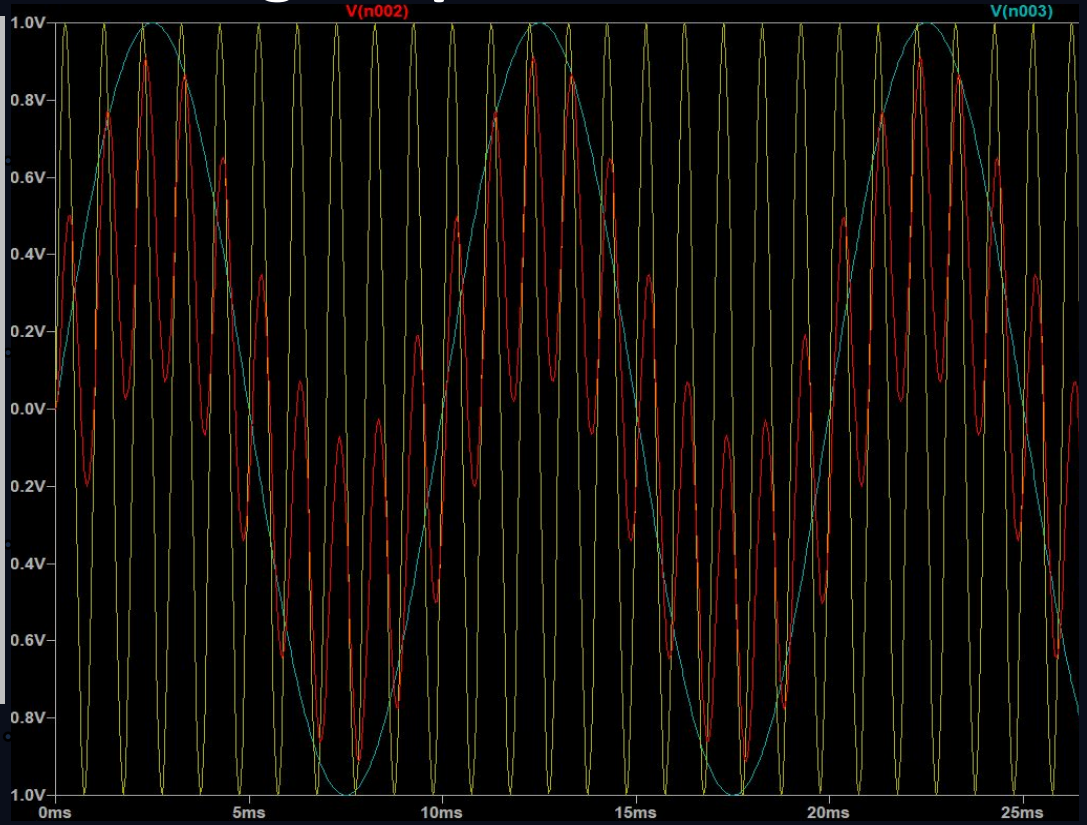

$$f_c = \frac{1}{2\pi RC} = \frac{1}{2\pi \times 10k \times 20nF} \approx 800\,\text{Hz}$$

Summing Amplifier Analysis (output in red)

Advantages And Limitations Of Analog ANC

ADVANTAGES:

1. Real-time response (zero latency)
   No processing delay, ideal for high-speed noise cancellation

2. Simpler design
   No ADC/DAC, no complex algorithms required

3. Low power consumption
   Suitable for portable devices (earbuds, headphones)

4. Cost-effective
   Fewer components → cheaper implementation

5. Continuous signal processing
   Works directly on analog signals (no sampling errors)

LIMITATIONS:

1. Limited flexibility
   Cannot easily modify filters or adapt to changing noise

2. Poor adaptability
   Not suitable for complex or dynamic noise environments

3. Component sensitivity
   Performance affected by temperature, aging, tolerances

4. Difficult tuning
   Requires manual adjustment of circuit components

5. Less precise control
   No advanced algorithms (like adaptive filtering, ML)

Detectability of Proposed System

Core Idea

- Our system introduces a **unique combination of delay analysis** and **adaptive gain optimization (α)** in an analog ANC setup.
- The system behavior produces **distinct measurable characteristics.**

Detection Methods	Description	Key Characteristic
Characteristic Residual Signal Pattern	Due to delay, the residual waveform has a specific shape and amplitude pattern.	Specific shape & amplitude pattern.
Frequency Signature (FFT Analysis)	Residual signal shows a distinct peak at the original noise frequency.	Distinct peak at noise frequency.
Optimal Gain Signature (α ≈ 0.87)	Our system produces a unique gain vs reduction curve. Peak occurs at a specific α value.	Peak at specific α value.

System Behavior vs Frequency

Cancellation degrades predictably with increasing frequency.

How This Helps in Identification

Any replicated system showing:
- Similar residual waveform
- Same FFT characteristics
- Similar optimal o behavior → Can be linked to our implementation approach

These measurable characteristics act as a functional fingerprint of our system.

17

Conclusion and Future Scope

Conclusion

- An analog Active Noise Cancellation system was designed using pre-amplifier, phase inversion, and summing amplifier stages.
- The system operates based on **destructive interference**, requiring accurate phase alignment.
- Practical implementation showed that **delay (τ) in circuits** introduces phase mismatch, reducing cancellation performance. Simulation results confirmed:
  - **Ideal case** → near-perfect cancellation
  - **With delay** → residual noise present
  - **With optimized gain (α)** → slight improvement (~5 dB)
- This highlights that **phase alignment and timing are critical** for effective ANC.

Future Scope

- Implementation of **adaptive filtering (LMS / FXLMS)** for real-time phase correction
- Transition to **digital ANC systems** for better delay compensation
- Extension to **broadband noise cancellation** instead of single-frequency signals
- Use of **multiple microphones** (feedforward + feedback) for improved accuracy
- Hardware improvements for **low-latency** and better phase matching