DRG.NO. PA XXXXX

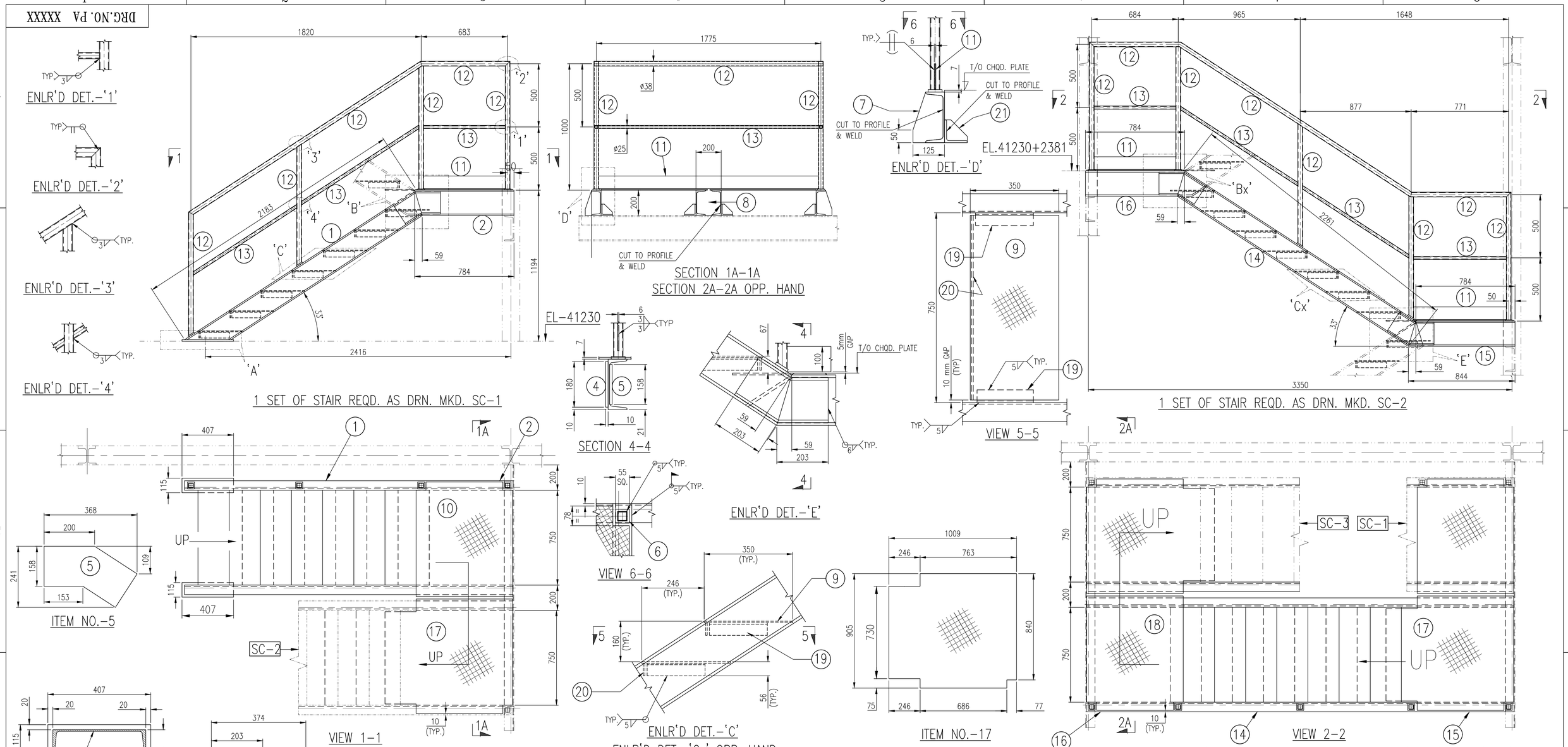

ST-2	21	PL.-90x10x90 LG.	Fe410 WB IS:2062	16	1	16	
	20	FLAT-50x6x350 LG.	Fe410 WB IS:2062	7	1	7	
	19	ISA-50x50x6x229 LG.	Fe410 WB IS:2062	14	1	14	
	13	SHS-25x25x2.6x4.5 R.M.		–	8	8	
	12	SHS-38x38x2.6x12.5 R.M.		–	34	34	
	11	FLAT-100x6x3.5 R.M.	Fe410 WB IS:2062	–	17	17	
	18	FLAT-764x7x905 LG.	Fe410 WB IS:2062	1	38	38	
	17	FLAT-905x7x1009 LG.	Fe410 WB IS:2062	1	50	50	
	9	FLAT-350x7x730 LG.	Fe410 WB IS:2062	7	14	98	
	8	PL.-188x10x200 LG.	Fe410 WB IS:2062	4	3	12	
	7	PL.-125x10x200 LG.	Fe410 WB IS:2062	8	2	16	
	6	PL.-55x10x55 LG.	Fe410 WB IS:2062	5	1	5	
	5	PL.-245x10x370 LG.	Fe410 WB IS:2062	4	7	28	
	4	PL.-262x10x374 LG.	Fe410 WA IS:2062	4	8	32	
	16	ISMC-200x75x784 LG.	Fe410 WA IS:2062	2	17	34	
	15	ISMC-200x75x844 LG.	Fe410 WA IS:2062	2	19	38	
	14	ISMC-200x75x2261 LG.	Fe410 WA IS:2062	2	50	100	

ST-1	21	PL.-90x10x90 LG.	Fe410 WB IS:2062	8	1	8	
	20	FLAT-50x6x350 LG.	Fe410 WB IS:2062	7	1	7	
	19	ISA-50x50x6x229 LG.	Fe410 WB IS:2062	14	1	14	
	13	SHS-25x25x2.6x3 R.M.		–	5	5	
	12	SHS-38x38x2.6x10.5 R.M.		–	29	29	
	11	FLAT-100x6x2.5 R.M.	Fe410 WB IS:2062	–	12	12	
	10	FLAT-763x7x905 LG.	Fe410 WB IS:2062	1	38	38	
	9	FLAT-350x7x730 LG.	Fe410 WB IS:2062	7	14	98	
	8	PL.-188x10x200 LG.	Fe410 WB IS:2062	2	3	6	
	7	PL.-125x10x200 LG.	Fe410 WB IS:2062	4	2	8	
	6	PL.-55x10x55 LG.	Fe410 WB IS:2062	4	1	4	
	5	PL.-241x10x368 LG.	Fe410 WB IS:2062	2	7	14	
	4	PL.-262x10x374 LG.	Fe410 WB IS:2062	2	8	16	
	3	PL.-115x12x407 LG.	Fe410 WB IS:2062	2	4	8	
	2	ISMC-200x75x784 LG.	Fe410 WA IS:2062	2	17	34	
	1	ISMC-200x75x2183 LG.	Fe410 WA IS:2062	2	48	96	
ASSLY. MK.	ITEM No.	DESCRIPTION.	MATERIAL.	No. RQD.	UNIT WT. IN KG.	TOTAL WT. IN KG.	REMARKS

BILL OF MATERIAL TOTAL WT= 944 KG.

NOTES TO FABRICATOR & ERECTOR

1. DRAWING IS PREPARED BASED ON SITE MEASUREMENT.
2. BEFORE FABRICATION & ERECTION ALL DIMENSION TO BE VERIFIED AT SITE.

NOTES

6. PAINTING SHALL BE PROVIDED AS PER GENERAL SPECIFICATION OF PAINTING
5. ELECTRODES FOR MILD STEEL SHALL CONFORM TO IS:814 & 815(LATEST).
4. ALL FABRICATION SHALL CONFORM TO IS:7215.
3. ALL STRUCTURAL STEEL SHALL CONFORM TO IS: 2062-1992 GR-A & GR-B).
2. ALL FILLET WELDS ARE 6mm U.O.N.
1. ALL DIMENSIONS ARE IN MILIMETER.
10. ø21.5 HOLES FOR M-20 PERMANENT BOLTS. SHOWN THUS.....
9. ø17.5 ERECTION HOLES FOR ø16 BOLTS SHOWN THUS.....
8. ALL STRUCTURAL MEMBERS SHALL BE PAINTED WITH ONE COAT OF RED OXIDE PAINT. FOR STRUCTURAL STEEL WORK CONFORMING TO IS:2074, IS:2339 & IS:158.
7. LENGTH OF ALL INCLINED MEMBERS AND THE SHAPE AND SIZE OF GUSSET PLATES SHALL BE VERIFIED BY FULL SCALE LAYOUT AT SHOP.

REV. MK.	REVISIONS	JOB. NO.	BY DATE	CHKD.	APP.	DRG. No.	REFERENCE

FIRST ANGLE PROJECTION

SCALE 1:15
JOB NO. XXXXXXXX
DRN. M.A.RAZA
CHKD. TAJMIR BASHA
APPROVED. D. DATTA

DRG. DEVELOPED BY:- M/S. TAJ CONSULTANCY & ENGG. SERVICES, JAMSHEDPUR.

TATA STEEL LIMITED, JAMSHEDPUR, 831001
TATA M E G DESIGN

DEPT. LIME PLANT
SUB DIVN. LIME PLANT
DETAIL DET. OF STAIRCASE SC-1 & SC-2.

DEVIATIONS FOR UNTOLERANCED DIMENSIONS:-IS:2102 (MEDIUM)

ROUGHNESS SYMBOL	ROUGHNESS GRADE NO. IS: 3073	ROUGHNESS VALUE IN MICRONS Ra(µm)MAX)
~	N12	50
▽	N11	25
▽▽	N9	6.3
▽▽▽	N6	0.8
▽▽▽▽	N3	0.1

DRG. NO PA XXXXX REV A

This drawing concepts, ideas associated are properties of Tata Steel Limited. Unauthorized usage, reproduction or distribution in any form is strictly prohibited