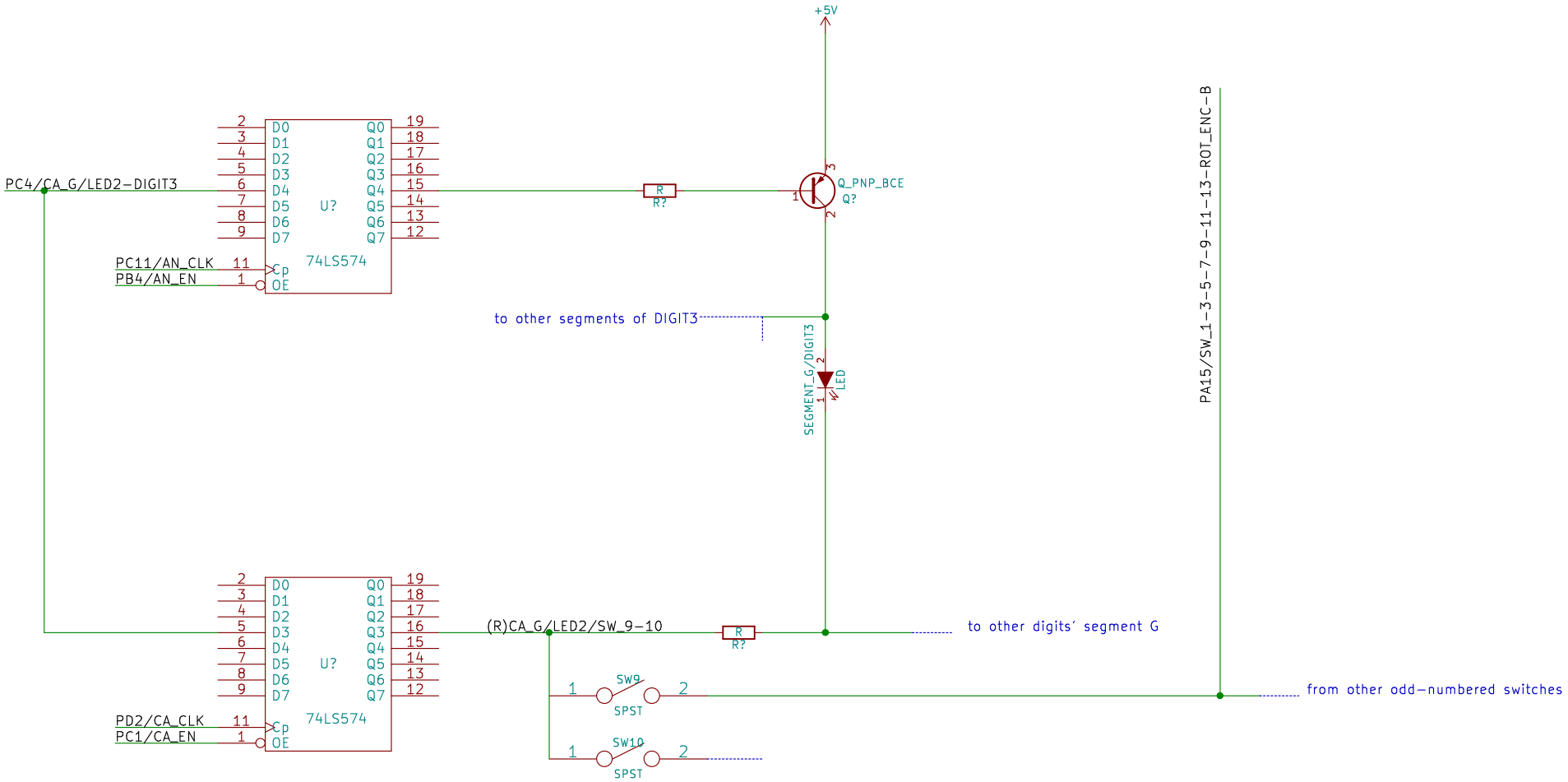

Sheet: /
File: P24_LED-switch_concept_drawing.sch

Title:

Size: A4	Date:	**Rev:**
KiCad E.D.A. eeschema 4.0.0-rc1-stable		Id: 1/1