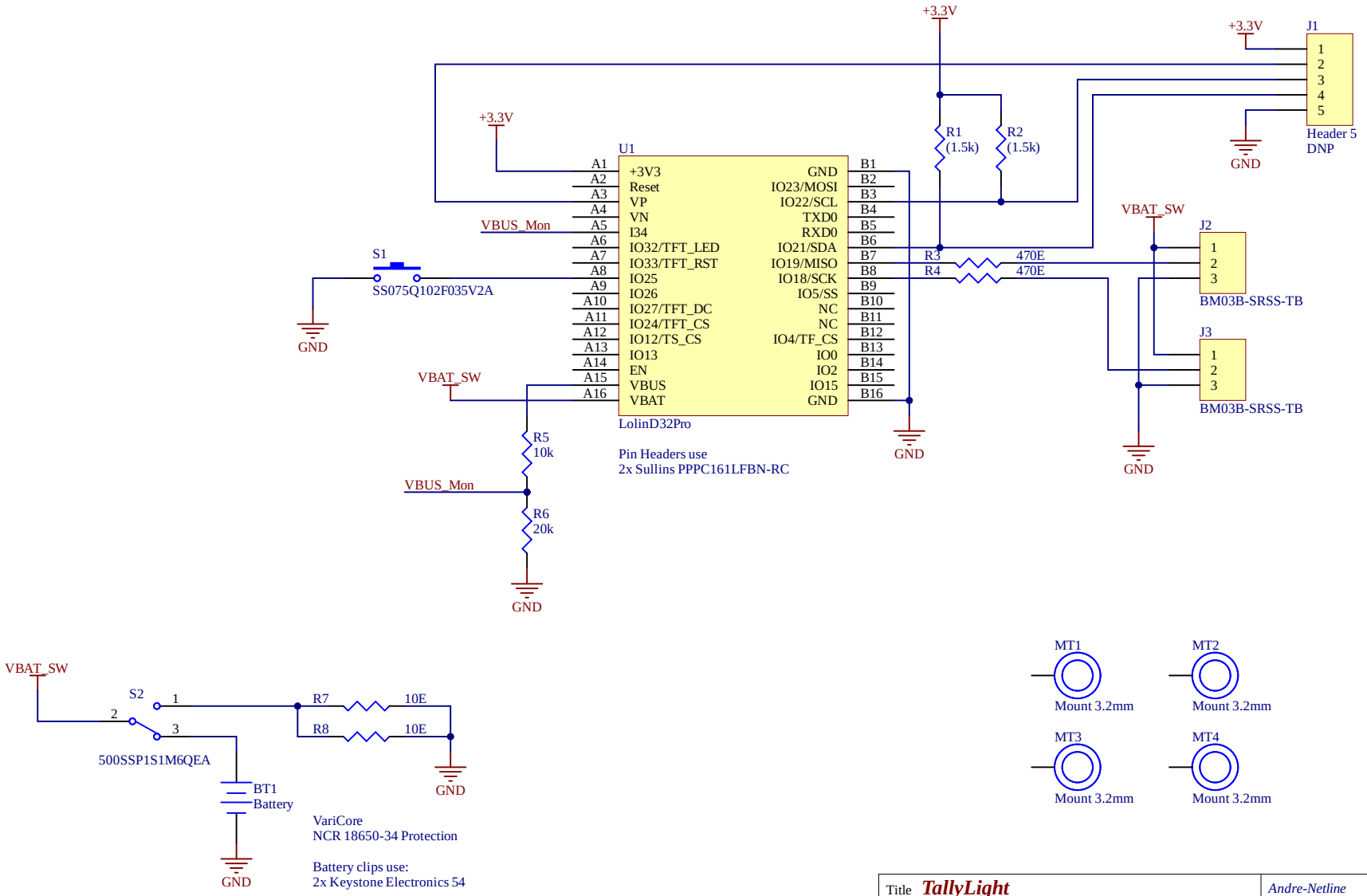

Title	*TallyLight*		
Size: A4	Author: Marc André	Revision: A	
Date: 14.08.2022	Time: 18:11:50	Sheet 1 of 1	
File: C:\Users\Public\Documents\Altium\TallyLight\TallyLight.SchDoc			

Andre-Netline
Koenizstr. 161
CH-3097 Liebefeld
Switzerland