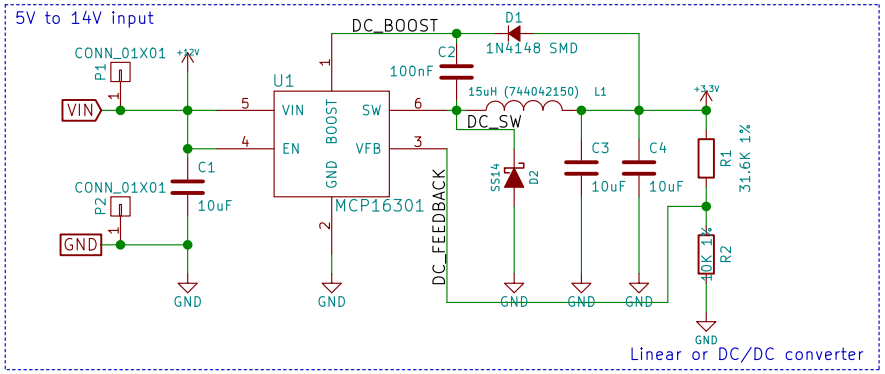

CHANGELOG
* V1.00B
  - fixed D1 & D2 inverted footprint
  - increased pad hole sizes for wires.

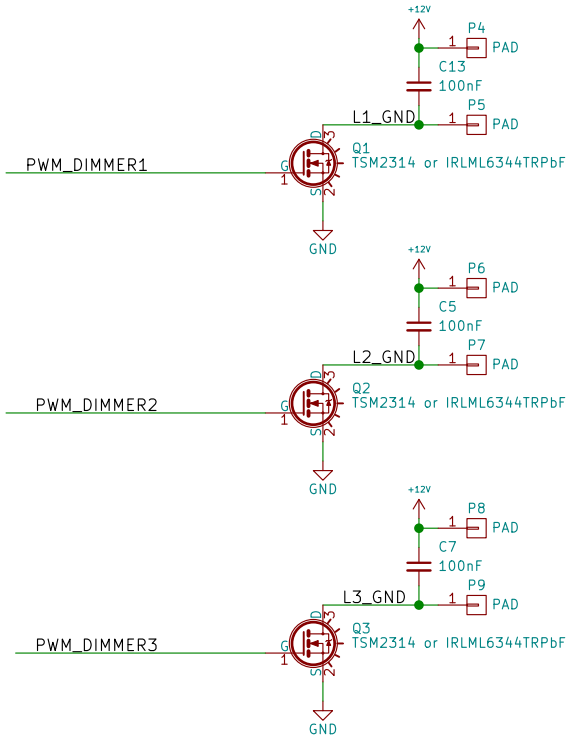

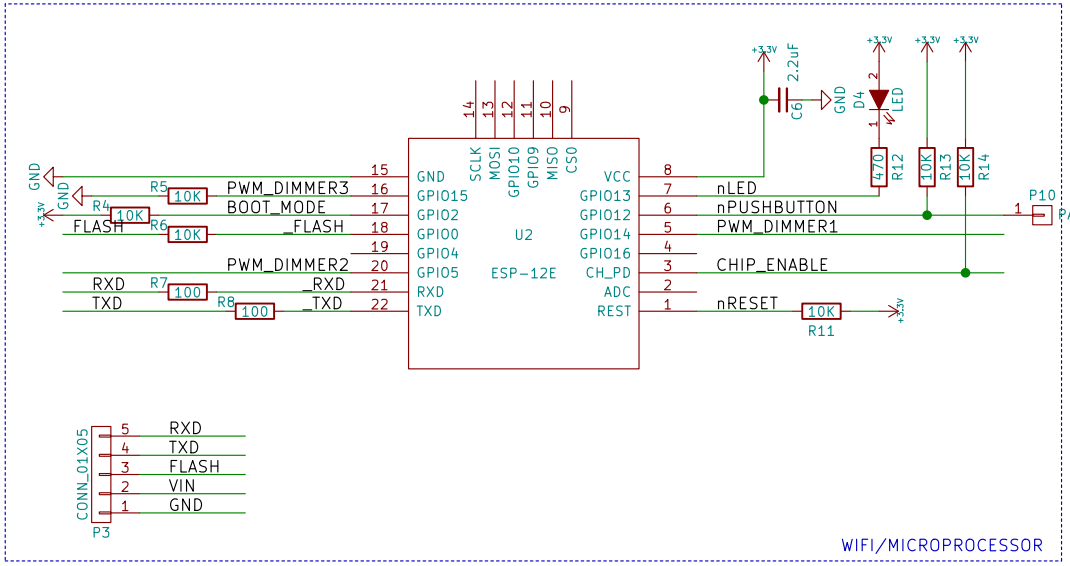

GPLv3 OSHW
+(34) 636522569
miguelangel@ajo.es
Miguel Angel Ajo

Sheet: /
File: ledboard.sch

Title: WIFI LED NanoDimmer

Size: A4	Date: 2015-10-24	Rev: REL-1.00A
KiCad E.D.A. eeschema (2015-10-25 BZR 6279)-product		Id: 1/1