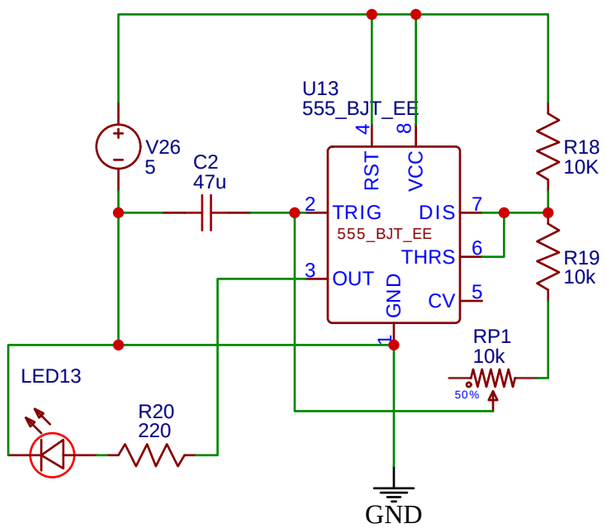

TITLE: Sheet_4		REV: 1.0
EasyEDA	Company: Your Company	Sheet: 1/1
	Date: 2025-08-29 Drawn By: manhcuonghp0204	