IOTAFLOW
SYSTEMS PVT. LTD

WITH CUT - IN CONVERTERS

VERSION UF - 5xx d
OPERATION MANUAL PART I

ULTRASONIC FLOW METER

TABLE OF CONTENTS

Page

INTRODUCTION 4
DEVICE VERSIONS 5
1. DESCRIPTION AND OPERATION 6
1.1. Application 6
1.2. Specifications 7
1.3. Metrological specifications 9
1.4. Contents of the delivery package 10
1.5. Device structure and operation 11
1.5.1. Operation principle 11
1.5.2. Device structure 13
1.5.3. Access levels 14
1.5.4. External connections 16
1.5.5. Logging 18
1.6. Flowmeter's components 19
1.6.1. Secondary Measuring Converter 19
1.6.2. Electro-acoustic converters 21
1.6.3. Pipeline sections 21
1.7. Marking and sealing 22
2. OPERATION 23
2.1. Operating restrictions 23
2.2. Preparing for operation 23
3. MAINTENANCE 25
4. PACKING, STORAGE AND TRANSPORTATION 26
APPENDIX A. View of components 27
APPENDIX B. Wiring diagrams 34

This document covers **"IOTAFLOW UF"** ultrasonic flowmeters of UF-510 d, -520 d, -522 d, -530 d, -540 d, -542 d, -544 d versions with cut-in converters and contains the information about their design and operation.

Part I is devoted to technical description and maintenance procedures. Part II describes flowmeter's operation.

Due to continuous improvement of product policy, actual flowmeter's specifications may differ from the data specified in this manual. However, this will not affect the metrological characteristics and functionality.

LIST OF ABBREVIATIONS

CB	- Communication block
CS	- Secondary measuring converter
DN	- Nominal diameter
LCD	- Liquid crystal display
SPS	- Secondary power source
PS	- Pipeline section
ER	- Error
CP	- Primary converter
PEA	- Electro-acoustic converter
USS	- Ultrasonic signal.

NOTE. Words in the text marked in bold, for example, **Settings** correspond to the items displayed on the flowmeter's screen.

DEVICE VERSIONS

Depending on application, the flowmeter comes in various design versions.

Design versions intended for various applications differ in number of measuring channels and type of sounding method. The design versions available are listed in Table 1.

Table 1

Design version	Number of channels	Sounding method	Qty of CPs
UF-510 d	1	single-beam	1
UF-520 d	2	single-beam	2
UF-522 d		two-beam	1
UF-530 d	3	single-beam	3
UF-540 d	4	single-beam	4
UF-542 d		two-beam	2
UF-544 d		four-beam	1

1. DESCRIPTION AND OPERATION

1.1. Application

1.1.1. **"IOTAFLOW UF"** ultrasonic flowmeter of UF-5xx d versions is designed to measure average volumetric flow rate and volume of bidirectional flows of various liquids (hot, cold and waste waters, acids, caustics etc.) in one or several pressure pipelines under various operating conditions.

The flowmeter is suitable for a wide range of applications in power industry, municipal engineering as well as in oil, gas, food and other industries. The flowmeters may be used as part of heat meters, metering systems, automatic process control systems etc.

"IOTAFLOW UF - 5xx d" is suitable for measuring flow rate and volume of liquid food products including alcohol-free drinks (juices, syrups and the like), alcohol drinks, dairy products (milk, yoghurt, kefir, sour cream etc.), mayonnaise, ketchup, solutions of food acids and alkalis etc.

1.1.2. **"IOTAFLOW UF - 5xx d"** ultrasonic flowmeter performs the following functions:

- Measuring average volumetric flow rate in either forward or reverse flow directions through 1-4 measuring channels (pipelines)
- Totalizing volume of forward and reverse flow independently and calculating their algebraic sum with regard to flow direction for each measuring channel
- Determining the current value of flow velocity and flow direction for each channel
- Batching preset liquid volume or batching in the start-stop mode along with determining the amount of batched liquid, batching time and flow rate
- Outputting measurement results to the analog (current), pulse or logical output
- Logging measurement data and configuration settings in the internal nonvolatile memory
- Displaying measurement, diagnostic, configuration and history (logged) data on the built-in indicator, data is transferred via RS-232 or RS-485 interface using dedicated cable, phone cable, Ethernet interface, radio channel or telecommunications channel
- Configuring flowmeter's settings according to on-site and process requirements
- Monitoring and indicating alarm conditions (error situations) and faults; recording error and fault types and intervals into the dedicated logs
- Providing protection of logged data and configuration settings from unauthorized access.

1.2. Specifications

1.2.1. General Specifications are listed in Table 2.

Table 2

Parameter	Value	Notes
1. Number of measuring channels	From 1 to 4	Optional
2. Nominal diameter of the pipeline, DN	From 10 to 5000	
3. Temperature of the medium, °C	From - 30 to +160	See note 1
4. Maximal pressure in the pipeline, MPa	2.5	
5. Power supply voltage	DC 24 V	See section 1.2.6
6. Power consumption, W	no more than 12	
7. Mean time to failure, h	75 000	
8. Mean life time, years	12	

NOTES.

1. Working temperature range depends on the design version of PEAs.

2. In case of ordering cut-in PEAs in standard design version, you may opt for pipeline sections with cut-in PEAs designed for up to 25 MPa pressure.

1.2.2. The flowmeter measures average volumetric flow rate up 20 m/s flow velocity.

Volume is measured at a flow velocity value of no more than 10.6 m/s. This value can be increased up to 20 m/s.

Flowmeter's sensitivity to flow velocity is no less than 0.01 m/s.

1.2.3. The flowmeter provides the number of digits for displaying measuring results specified in Appendix C (Part II) of this manual.

1.2.4. The flowmeter provides that the results of measurements can be outputted to:

- Universal outputs – from 1 to 9 (optional)
- Analog output – 2 (optional)
- RS-232 (RS-485) interface – 1;
- Ethernet interface – 1 (optional).

1.2.5. The flowmeter provides storage of measurement results in the following logs:

- Hourly log – 1440 records (hourly records) – 60 days
- Daily log – 60 records (daily records)
- Monthly log – 48 records (monthly records)
- Interval log – up to 14400 records
- Batcher log – up to 512 records per a channel
- User log – up to 1000 records
- Measuring channels error log – up to 512 records per a channel
- Failure log – up to 60 records
- Mode log – up to 512 records.

When powered off, the flowmeter stores measurement results and configuration settings for no less than 1 year.

1.2.6. The flowmeter is powered from a stabilized 22 ... 29 V DC voltage source with pulse level of no more than ± 1.0 %. The flowmeter can be powered from mains AC (154-264) V (50±2) Hz via Secondary Power Source.

1.2.7. Environmental restrictions:

a) Ambient temperature

- Secondary converter (CS): ambient temperature from 0 to + 50 °C
- Electro-acoustic converters (PEAs) with plastic protection: liquid temperature from - 30 to + 120 °C
- PEAs with titanium protection: liquid temperature from - 30 to + 160 °C
- Communication block (CB): ambient temperature from - 50 to + 85 °C.

b) Relative humidity

- CS: up to 80 % under + 35 °C, without moisture condensation
- PEAs, CB: up to 100 % under maximum + 40 °C, with moisture condensation.

c) Atmospheric pressure from 66.0 to 106.7 kPa;

Protection provided by the enclosure:

- CS, CB: IP54
- PEA-202, -204, -302, -502, -504: IP68 code; other models: IP67.

1.2.8. View, overall dimensions and weight are given in Appendix A.

1.3. Metrological specifications

1.3.1. Limits of permissible relative error for measurement, indication, logging, storage and transferring of average volumetric flow rate and volume measurement results for any flow direction for flowmeters with primary converters[1] (CPs) do not fall outside the following ranges (when type installation[2] and operation conditions comply with those specified in the present manual):

$\delta = \pm\left(0{,}95 + \frac{0{,}1}{v}\right)$ – using single-beam sounding method with a liquid viscosity of ≤ 4 cSt;

$\delta = \pm\left(1{,}2 + \frac{0{,}2}{v}\right)$ – using single-beam sounding method with a liquid viscosity of > 4 cSt;

$\delta = \pm\left(0{,}45 + \frac{0{,}1}{v}\right)$ – using two-beam sounding method;

$\delta = \pm\left(0{,}25 + \frac{0{,}1}{v}\right)$ – using four -beam sounding method.

Where δ – limits of permissible relative error, %;

v – flow velocity, m/s.

NOTES

1. "Primary converter" means a pipeline section with PEAs installed on it.
2. "Type installation" means installation carried out in compliance with the requirements specified in the "ULTRASONIC FLOW METER **IOTAFLOW** UF. Version UF-5xx d. Installation manual" document, see Table A.1, Appendix A.

1.3.2. The limits of permissible relative measurement error for measuring time of operation in various modes do not exceed ± 0.1 %.

1.4. Contents of the delivery package

Items of the delivery package are specified in Table 3.

Table 3

Item	Qty	Notes
1. Secondary measuring converter (CS)	1	Note1
2. Electro-acoustic converter (PEA)	2 – 8	Note 2
3. Pipeline section (PS)	1 – 4	Note 2
4. Secondary power source 220VAC/=24VDC	1	Optional
5. Installation kit	1	Note 3
6. Communication Block (CB)	1 – 4	Optional
7. Operating documentation:	1	
- Passport		
- Operation manual, part I and II		
- Installation manual		

NOTES.

1. The number of measuring channels and communication (service) modules is specified in the order sheet.
2. The quantity and type are specified in the order sheet.
3. In standard supply configuration CS-PEA cable length is 10 m (2×10 m per a channel).

Operating documentation for this product and other products are available on: www.iotaflow.com .

1.5. Device structure and operation

1.5.1. Operation principle

1.5.1.1. The flowmeter is a transit time ultrasonic flow meter. Its operation principle is based on measuring the time difference between the time it takes for an ultrasonic signal (USS) to travel through the liquid with the direction of flow and against it.

1.5.1.2. The CS generates electric sounding pulses which alternately come to PEA1 and PEA2 (Fig.1).

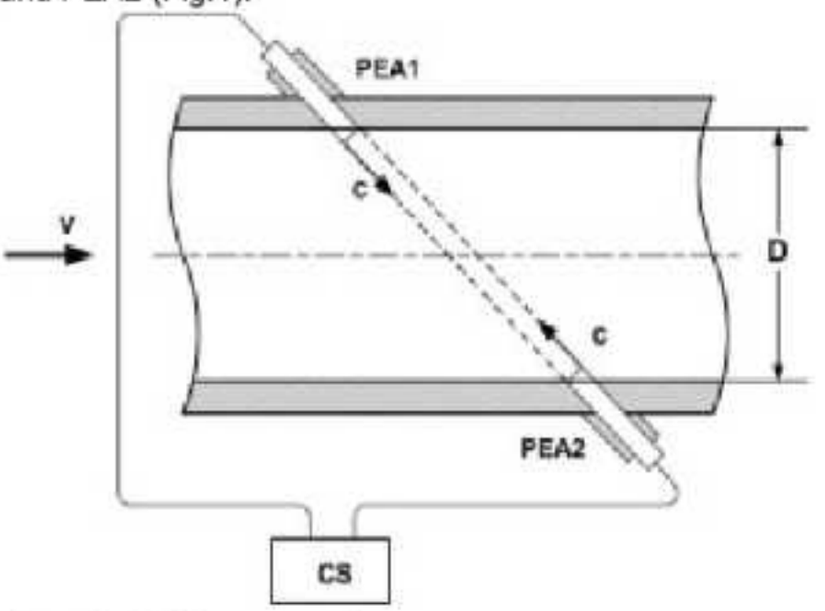

Fig.1. Diagram showing USS propagation

USS generated by one PEA (electro-acoustic transducer) is projected through the liquid flowing in the pipe and is received by the other PEA. Because of liquid flow, a sound wave is shifted, which in turn leads to the difference in upstream and downstream times of USS travel. It takes less time for an ultrasonic signal to travel in the flow direction (from PEA1 to PEA2) than that in the opposite direction (from PEA2 to PEA1). The difference in upstream and downstream time of USS travel through an acoustic path **dT** is proportional to flow velocity of fluid **v** and, correspondingly, to volumetric flow rate **Q**.

The digital method of processing the received PEA signals ensures stable operation under noise conditions, and also simplifies the adjustment of the flow meter during commissioning

1.5.1.3. In a two-beam flowmeter designed on two-channel basis, one PS (pipeline section) bears two couples of PEAs. In a four-beam flowmeter designed on four-channel basis, one PS bears four couples of PEAs. Flow rate is measured independently for each beam.

1.5.1.4. The flow rate value is calculated only if the following condition is fulfilled:

$$Q_{min} \leq Q,$$

Where Q_{min} – minimal value of the flow rate, m^3/h;

Q – current value of the flow rate, m^3/h.

The recommended value of lower flow cutoff corresponds to flow velocity of 0.035 m/s.

If $Q < Q_{min}$ condition is fulfilled, the measured flow rate values are displayed as zero, value totalizing and pulse transmission to the universal output are cancelled, and the value of current at the output becomes equal to the lower range value.

If $Q > Q_{max}$ (where Q_{max} corresponds to the flow velocity value of 10.6 m/s), the flowmeter measures and displays flow rate values, however, volume totalizing and logging, as well as pulse transmission to the universal output in the pulse mode, are cancelled. The value of current at the output becomes equal to the upper range value.

1.5.1.5. Cut-in PEAs are mounted into the holes cut in the pipeline section (PS). The PEAs are installed on the pipeline according to the diagrams shown in Fig.2.

- Z-configuration – PEAs are located on opposite sides of the PS in a plane going through the PS centerline ("diametral" installation – only for single-beam sounding method), or PEAs are arranged in parallel with the PS centerline ("chord" installation – for two-beam or four-beam sounding method). In this case, an ultrasonic beam goes from one PEA to another without reflection from the internal of the pipeline section
- For pipeline sections of U-type (U-elbow) – cut-in PEAs are placed on the ends of the PS straight section, and USS travels along the liquid flow.

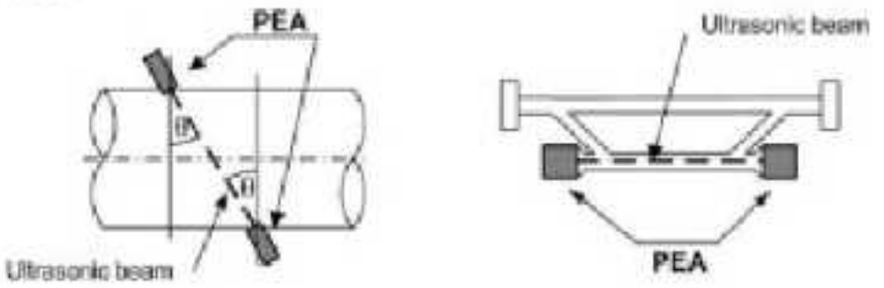

a) Z-configuration b) U-type PS

Fig.2. PEA installation diagrams

For cut-in PEAs installed in the straight PS, a longitudinal angle θ (angle between the axis of the cut-in PEA and the plane normal to the pipeline centerline) can range from 20° to 70°. The recommended value is ~ 45°.

1.5.1.6. The flowmeter allows for single-, two- or four-beam sounding of liquid flow (Fig.3).

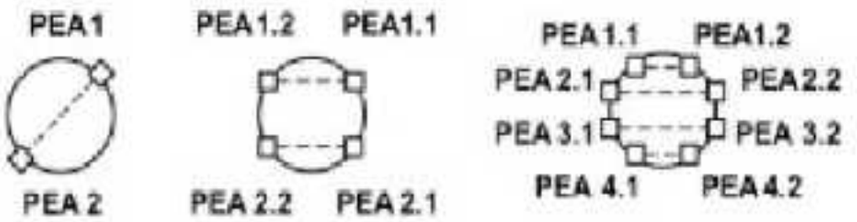

a) b) c)

a) single-beam "diametral" sounding;

b) two-beam "chord" sounding;

c) four-beam "chord" sounding.

Fig.3. Arrangement of PEA pairs in pipeline cross-section according to sounding method

Table 4. PEA installation options

Sounding method	1-beam		2-beam and 4-beam
PEA installation configuration	U-elbow type PS	Z-configuration	Z-configuration
Arrangement of PEA pairs	Along flow axis	On the diameter	On the chord
DN of pipeline section,	<50	≥50	≥150

1.5.2. Device structure

The flowmeter's block diagram is shown in Fig.4.

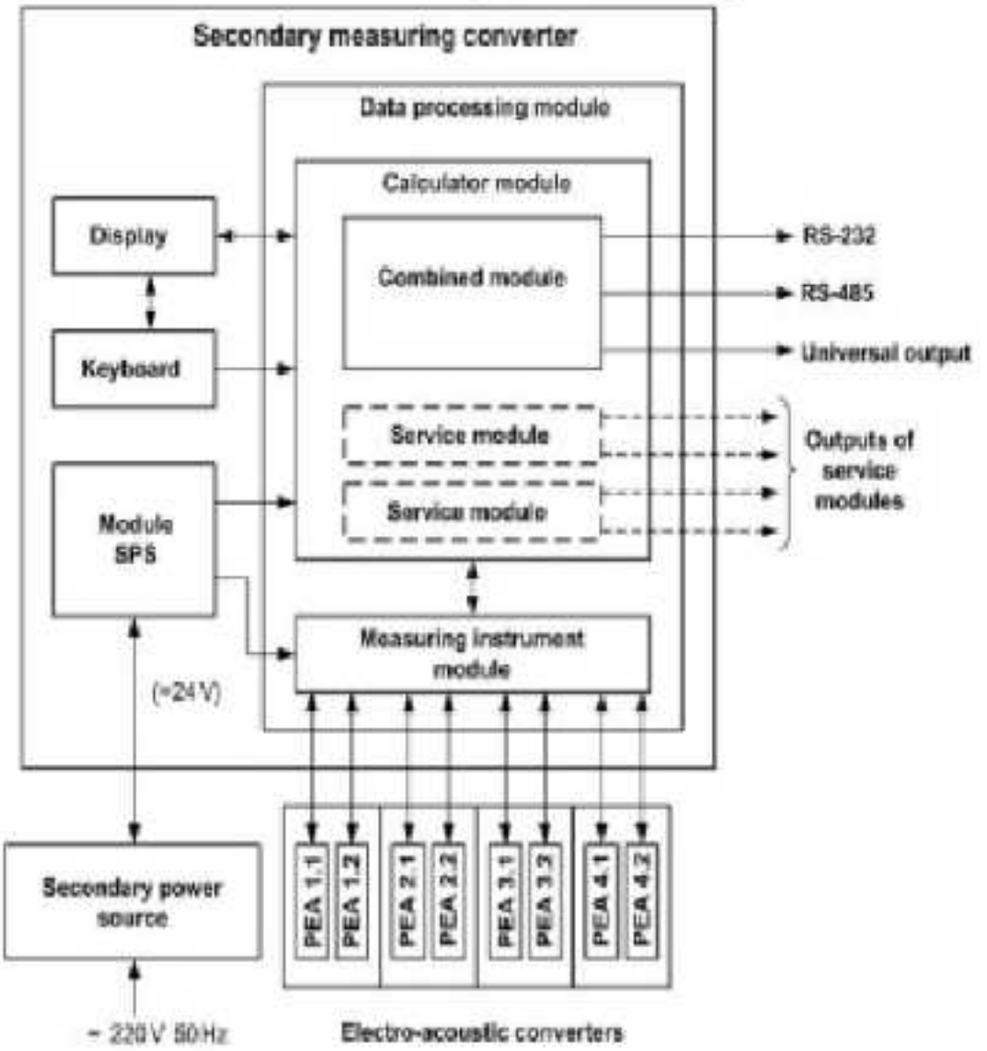

SPS – Secondary Power Source.

Fig.4. Block diagram for 4-channel flowmeter

"IOTAFLOW UF" ultrasonic flowmeter includes one or several primary converters and a secondary measuring converter.

The primary converter is a specially designed measuring tube with one, two or four pairs of PEAs installed on it.

Number of primary converters used with the flowmeter and PEA pairs installed on the PS depends on the flowmeter's design version.

The secondary measuring converter consists of measuring and calculation modules. The measuring module is responsible for electroacoustic sounding control and measurement signal processing. The cal-

culation module performs secondary processing and storage of measurement results. Data exchange between the measuring and calculation boards is performed via internal RS-485 interface.

To provide data exchange with external devices, the calculation board is equipped with the combined module consisting of universal, RS-232 and RS-485 output circuits.

You may opt for installation of up to 2 additional communication modules:

- One module of universal outputs (four outputs per a module)
- Module of analog output
- Ethernet interface module.

Flowmeter's operation is controlled from the keyboard. The graphic Liquid Crystal Display (LCD) makes visible measurement, diagnostic, configuration, and history (logged) data. LCD displays data in four lines (20 characters per line). On-screen data update period is 1 s.

1.5.3. Access levels

1.5.3.1. The flowmeter has three levels of access to setting and calibration parameters:

- SETUP – setup and verification
- SERVICE – start-up procedures
- OPERATION – user mode.

The operating modes differ by level at which the user can access certain data (displayed and/or transferred via RS-232 or RS-485 interfaces) and modify flowmeter's configuration settings.

Maximum rights are granted in the SETUP mode. The mode allows the user to view all of the parameters and to modify all of the configuration settings. Minimum rights are given in the OPERATION mode.

Flowmeter's operation is controlled from the keyboard via the menu designed on the model of nested menus and windows. Operation procedures, indication principles, menu structure, and tables of displayed parameters are specified in Part II of the present manual.

The flowmeter can be externally controlled via RS-232 and RS-485 interfaces.

1.5.3.2. Flowmeter's operating modes are set by placing (removing) jumpers on J3 and J4 terminals, which are located on the combined module ("RS-232 / RS-485 / Universal output 0").

Combinations of jumpers with regard to operating modes are specified in Table 5, where "+" means that the terminal contacts are closed by a jumper and "-" means that the terminal contacts are opened.

Table 5

Mode	Terminal		Mode description
	J3	J4	
OPERATION	-	-	Work
SERVICE	-	+	Start-up procedures
SETUP	+	-	Adjustment

1.5.3.3. OPERATION mode – flowmeter's on-site operation.

In the OPERATION mode, the user can view the following parameters:

a) measurement values: average volumetric flow rate, flow volume totalized for forward and reverse flow and their algebraic sum, flow velocity;

b) measurement data and status logs (excluding the "Mode" and "User" logs);

c) configuration settings: automatic winter/summer time clock setting, types of service modules installed, and specifications of outputs;

d) operation settings:

- Reading of built-in real time clock
- RS-232 and RS-485 settings
- Start time and duration of error situations (ER)
- Error messages related to measuring channels and outputs.

In the OPERATION mode, the user can specify batching value and enable batching procedure as well as specify RS-232 and RS-485 settings: flowmeter's network address, data transfer rate, delay duration, transfer gaps etc.

1.5.3.4. SERVICE mode – start-up procedure.

In the SERVICE mode, in addition to the above, available in the OPERATION mode, the operator can do the following:

a) view the "Mode" and "User" logs;

b) view and modify:

- Settings of pipeline sections
- Measuring results processing settings
- Service settings
- Flowrate (volume) measurement units [m^3/h; m^3/s; l/min (m^3; l)]
- Type and settings of communication modules
- Interval log settings
- Reading of built-in real time clock
- Automatic winter/summer time clock setting.

c) perform on-site verification;

d) set totalizer to zero;

e) perform flowmeter's initialization;

f) clear status logs (excluding the User log) and data logs; the "Mode" log cannot be cleared in none of the operation modes.

1.5.3.5. SETUP mode allows to view and modify all of the settings.

In the SETUP mode, in addition to the above, available in the OPERATION and SERVICE modes, the operator can do the following:

- Verification the flowmeter
- Clear the User log
- Enter flowmeter's serial number into the memory.

1.5.4. External connections

1.5.4.1. Serial interfaces

Serial interfaces are used to control the flowmeter, read measurement results, data logs, configuration settings, and diagnostic data as well as to modify configuration settings. The RS-232 and RS-485 interfaces support ModBus (RTU ModBus and ASCII ModBus).

The RS-232 interface may be used for connection to a PC via:

- Cable (maximal cable length is 15 m)
- Phone line (telephone modem)
- Wireless channel (wireless modem)
- 900/1800 MHz GSM line via mobile communications adapter.

Communication distance via phone, wireless or mobile communications channel is determined by characteristics of the channel.

RS-485 interface supports cable communications among a group of several end users, one of which can be a PC, at a distance of up to 1200 m.

Connection of Mobile Communications adapter either to a group or to a single device allows for data transfer via wireless communications channel including the Internet.

The data transfer rate via RS-232 and RS-485 interfaces (from 1200 to 19200 baud) as well as communication properties are set from a PC.

CAUTION! You must not use RS-232 and RS-485 interfaces simultaneously.

Ethernet interface is used for connecting the devices via local network or for data exchange among the LAN devices and a remote PC via the Internet. Data exchange is performed via a LAN gateway having its own (global) IP address. Transferred data is packaged using Ethernet / IP / UDP / TFTP / ModBus stack of protocols. ARP (Ethernet / ARP) protocol is also supported. It is used to define MAC-address of the node by IP address on request. Connection to Ethernet network is made as per Fig.A.4, Appendix A.

1.5.4.2. Universal outputs

Depending on the number of service modules installed (see section 1.6.1.3), the flowmeter can have from 1 to 9 galvanically isolated universal outputs.

Functions, working modes, specifications of output signals and disconnection of the outputs are specified programmatically. Options available are specified in Table B.6 represented in Part II of this manual.

Diagrams of output stages, description of operation and signal levels are given in Fig.B.3 (Appendix B).

In the frequency mode, measurement results are outputted in the form of square pulse sequence with period-to-pulse duration ratio of 2 and pulse repetition rate proportional to the current flowrate value. The frequency output can be scaled by specifying maximal frequency **Fmax**, scale factor **KC**, as well as lower **Qlt** and upper **Qut** threshold flowrate

values related to output frequencies of 0 Hz and **Fmax**. Maximum value of **Fmax** is 3000 Hz.

In the pulse mode, a burst of pulses is generated on the output within a second, in which the number of pulses (considering pulse weight **Kp**) corresponds to the flow volume measured over a previous second. Maximum pulse repetition rate in the burst (square pulse sequence with period-to-pulse duration ratio of 2) is 500 Hz.

To provide correct work of the universal outputs, the scale ratio **KC** (pulses/m^3, pulses/l) in the frequency mode and pulse weight **Kp** (m^3/pulse, l/pulse) in the pulse mode are calculated automatically.

KC calculation is made on the basis of user-specified **Qut** and **Qlt** values and **Fmax** value. **Kp** is derived from **Qut** value and duration of output pulses τ lying within the range of 1 to 500 ms.

In the logical mode, one signal level corresponds to "event" (or its state) and the other level corresponds to "no event" (or another state).

Programmatically this means: **Active level**, i.e. **High** or **Low** signal level, is set when the event is present.

In the batching mode, output signal parameters depend on the operation mode (pulse or logical) of the universal output.

If the universal output operates in the pulse mode and the value specified in **Param.** field is <**pul. batcher**>, one pulse of programmed duration is generated on the universal output on completion of batching.

If the universal output works in the logical mode, output signal level is changed at the moment of start or stop of batching.

1.5.4.3. Analog output

Current signal is provided by the corresponding service module. Function and operational parameters of the analog output module are specified programmatically. Options available are specified in Table B.6 represented in Part II of this Manual.

Galvanically isolated analog output realized on the base of the service module works in one of three ranges: 0-5 mA, 0-20 mA or 4-20 mA.

Nominal static characteristic of the analog output is calculated as follows:

$$Q_v = Q_{lt} + (Q_{ut} - Q_{lt})\frac{I_{out} - I_{min}}{I_{max} - I_{out}},$$

Where Q_V – measured flowrate value (m^3/h; m^3/s; l/min);

Q_{lt} – specified value of lower threshold for the analog output corresponding to I_{min}, m^3/h; m^3/s; l/min;

Q_{lt} – specified value of upper threshold for the analog output corresponding to I_{min}, m^3/h; m^3/s; l/min;

I_{out} – value of output current signal corresponding to the measured flow rate, mA;

I_{min} – minimal operating range for the analog output (0 or 4), mA;

I_{max} – maximal operating range for the analog output (5 or 20), mA.

The analog output can be connected to an external load of up to 1 kOhm in (0-20) mA or (4-20) mA operating ranges or of up to 2.5 kOhm in (0-5) mA operating range.

Permissible length of a signal cable connected to the analog output depends on the impedance of the corresponding signal circuit and impedance of a connected input. The condition is that the sum of impedances shall not exceed the specified external load resistance.

1.5.5. Logging

1.5.5.1. Measurement results are recorded into device's internal logs: hourly, daily, monthly, interval, and batcher logs.

Hourly, daily, and monthly logs are filled independently for each channel and have the same structure. Log capacity:

- Hourly log – 1440 records (hourly records)
- Daily log – 60 records (daily records)
- Monthly log – 48 records (monthly records)
- Interval log – 14400 records (data recorded during specified intervals).

For the interval log, interval duration can be selected from 5 s to 120 min.

Format of one record is as follows:

- **Tdw** – dead time, s – in the hourly log, hours:min – in the daily and monthly logs; for the interval log, **Tdw** is not recorded
- **V+** – total volume for direct flow over logging interval, m^3 (l)
- **V-** – total volume for reverse flow over logging interval, m^3 (l)
- **ΣV** – total volume with regard to flow direction over logging interval, m^3 (l).

In addition, USS failure per each of 4 beams is represented in the record in text message.

Measurement data are logged along with logging interval indication:

- Date and hour – for hourly logs
- Date – for daily logs
- Month and year – for monthly logs
- Date and stop time of the logging interval – for interval logs.

Search function is built in to enable the user to find the required record in any log.

1.5.5.2. The purpose of the batcher log is to record the parameters based on the results of batching. The log has a capacity of 512 records per a channel. The format of a record is as follows:

- Date and start time of batching
- **Ve** – preset batch value, m^3 (l)
- **Vb** – measured batch value, m^3 (l)
- **Tb** – batch accumulation time, s
- Date and stop time of batch accumulation
- **Qavg** – average volumetric flow rate during batching, m^3/h (l/min).

1.5.5.3. Modifications made on configuration settings are logged in the User log with a capacity of 1000 records. User log format is as follows:

- Modification date and time
- Name of the modified parameter
- Parameter's value prior to modification
- Parameter's value after modification
- Order number of the record.

1.5.5.4. Modifications made on the operation mode are logged in the Mode log with a capacity of 512 records.

Mode log format is as follows:

- Order number of the record
- Name of the active operation mode
- Date and time of activation.

1.5.5.5. Error conditions and faults are recorded into the Measuring Channels error log, Outputs error log (universal and analog outputs) and Failure log. The Error logs can contain up to 512 records, the Failure log has a capacity of 60 records.

Error log format:

- Order number of the record
- Alarm (error) name
- Date and start time of the alarm (error) situation (ER)
- ER duration (hours, minutes, seconds)
- Date and stop time of the alarm (error) situation (ER).

Failure log format is as follows:

- Order number of the record
- Fault name
- Date and time of fault detection.

1.6. Flowmeter's components

1.6.1. Secondary Measuring Converter

1.6.1.1. CS functions

The Secondary Measuring Converter (CS) is a Measurement/Calculation Data Processing Block designed on the modular principle. The CS provides:

- Flow sounding and processing of signals obtained from PEAs
- Calculation of measured values
- Logging and storing of measurement results, calculated parameters, configuration settings etc. in the flowmeter's non-volatile memory
- Transferring of measurement, history (logged), diagnostic, and configuration data to LCD display via RS-232, RS-485 interfaces
- Data transfer to the universal outputs
- Automatic monitoring and indication of alarm conditions and faults
- Protection of logged data and configuration settings from unauthorized access.

1.6.1.2. CS design

View of the CS is shown in Fig.A.1, Appendix A.

The CS consists of three parts (modules): front part – Data Processing Module, center part – SPS (Secondary Power Source) module, and base part - Mount module. The Data Processing Module comprises measurement and calculation boards. LCD graphic display and keyboard are both mounted on the module's front panel.

The SPS CS module includes Secondary Power Source board. Grounding terminal is located on the SPS bottom panel.

The SPS module and Data Processing module are electrically (by the multiple-wire flexible flat cable) and mechanically (by the screws installed from the SPS side) connected and build up the Data Processing Subblock.

The Data Processing Subblock is in turn screwed with the CS Mount module from the front panel side, and together, they build up the Secondary Converter block. The rear panel has fixing holes for the brackets, which are used to mount the Secondary Converter on DIN rail (Fig.A.5).

Bottom panel of the Mount module contains: external RS-232 port and cable through for power cable, PEA signal cables, and external signal cables.

The external RS-232 port located on the Mount module is connected to the 8-pin RS-232 port of the Combined Electronic Module by a flexible flat cable.

Connectors on the measurement and calculation boards, which are used to connect signal cables and set operation modes, are accessed from the rear side of the Data Processing Subblock (Fig.A.2).

1.6.1.3. Communication modules

Depending on the number of measuring channels (PEA pairs), the Measurement board includes the corresponding number of transmitting/receiving communication modules: from 1 to 4.

The Combined output module containing the Universal 0, RS-232, and RS-485 outputs is installed on the Calculation board. The Combined module is equipped with the terminals (used to set operation modes for the flowmeter and output stage of the universal output) and the connectors (used for external cable connections).

The Calculation board bears two expansion slots (connectors) intended for connection of one or two optional external communication (service) modules.

The service modules are equipped with the connectors used to connect signal cables from signal receivers, and, besides the above, the universal output modules bear the terminals for setting operating modes of the output stages. An example of marking the connectors on the Data Processing Subblock is given in Fig.A3, Appendix A.

Table 6 shows possible combinations of the external communication modules and numbering of outputs relative to module (expansion slot) location.

Table 6

Module name	N of the slot	N of the output	Possible combinations of modules						
Communication module of Universal outputs	1	1…4	–	–	–	×	×	×	×
	2	5…8	–	–	–	–	–	–	×
Communication module of Analog output	1	1	×	–	×	–	–	–	–
	2	2	–	–	–	–	×	–	–
Ethernet Communication module	2	2	–	×	×	–	–	×	–
Combined module	–	0	×	×	×	×	×	×	×

1.6.2. Electro-acoustic converters

1.6.2.1. PEAs alternately operate in two modes: transmitter mode, in which the electrical pulse signal coming from the CS is transduced into ultrasonic waves, and receiver mode, in which ultrasonic waves in liquid are transduced into the corresponding electrical signal.

1.6.2.2. PEAs come cut-in type

The cut-in PEAs (Fig.A.6) come in cylindrical case with the transmitting plane in the flat end. The cut-in PEAs are mounted into the holes cut in the pipeline side so that the transmitting (radiating) plane contacts the medium. PEAs are sealed with heat-resistant electrically insulating compound.

To provide PEA-CS communication, the coaxial RF cable of no less than 1.5 m is fixed to the PEA case with the connector soldered to its end.

Another way to provide the connection is to use the Communication block installed on the pipeline section. In this case, instead of the connector, it is necessary to attach leads to the ends of the central conductor and shield.

Length of CS-PEA communications cables is 100 m as a maximum. The length may be increased provided that the received signal meets the requirements.

Depending on application, the flowmeter is equipped with PEAs of different types and design versions.

1.6.3. Pipeline sections

1.6.3.1. As a pipeline section (PS), you can use a pipe run factory-prepared for PEA installation and on-site mounting of the primary converter into the active pipeline. The material of the walls of the PS under the cut-in PEA should allow her to install mounting pipes for PEA on it tightly.

1.6.3.2. The delivery package may include primary converters installed on pipeline sections of the following types:

- PS-×12 – straight with two cut-in PEAs installed on the diameter
- PS-×32 – U-type (U-elbow) with two cut-in PEAs installed on the ends of straight section
- PS-×42 – straight with 4 cut-in PEAs installed on two chords
- PS-×82 – straight with 8 cut-in PEAs installed on four chords.

The first position of PS product identification line indicates PS production material:

- PS-0×2 – carbon steel
- PS-1×2 – stainless steel
- PS-2×2 – frost-proof stainless steel.

1.6.3.3. To provide ease of mounting as well as to avoid mechanical damages to PEA cable ends, the pipeline section with cut-in PEAs can be equipped with Communication block (CB). The CB is intended to provide electrical connections between PEA cables and cables connected to the CS.

The CB is rigidly fixed to the PS. The PEA cable is protected against mechanical damages by a copper sleeve. Design of CB cable entry holes provides fixation of the sleeve used for CS cable mechani-

cal protection. An example of positioning the CB on the pipeline section and its view with the cover removed are given in Fig.A.7 and A.8 (Appendix A). PEA-CB wiring diagrams are shown in Fig.B.2 (Appendix B) respectively.

1.7. Marking and sealing

1.7.1. Front panel of the CS bears flowmeter's name and designation, manufacturer's logo, and sign of the Type Approval Certificate. Serial number is indicated on the nameplate located on the CS case.

1.7.2. Serial numbers of other units are either indicated on the nameplate or stenciled on the corresponding case.

1.7.3. After performing verification, the cap covering J3 terminal, used to enable modification of verification settings, is sealed along with one of the screws fixing the Data Processing Subblock.

1.7.4. J4 terminal that enables modification of operation settings is sealed after carrying out the start-up procedure and checking the compliance of the operation settings with the values specified either in the Equipment Certificates for the flowmeter and primary converters or in the Reports on mounting and start-up procedure.

Characteristics of the primary converters (CPs) are determined in the post-manufacture tests and entered in the CP Equipment certificates and in the Report on mounting and start-up procedure. Form of the Report on mounting and start-up procedure is given in the Installation Manual.

2. OPERATION

2.1. Operating restrictions

2.1.1. Environmental restrictions with regard to the factors affecting the performance and characteristics of the controlled liquid shall comply with the requirements specified in the operating documentation.

2.1.2. The CP can be mounted into the pipeline installed horizontally, vertically, or obliquely.

2.1.3. For precision and reliable operation, when choosing PEA mounting location, the following conditions must be met:

- Liquid pressure in the pipeline and pipeline's operational characteristics must not be of values that may facilitate gas release and/or gas (air) collection
- Straight pipe runs of appropriate length must be provided upstream and downstream the PEAs. The pipeline installation sections not include devices or components that may disturb flow structure
- When the flowmeter is operated, the pipeline must be fully filled with liquid.

Mounting considerations and mounting (dismounting) instructions are given in the Installation Manual.

2.1.4. Type and liquid composition (suspensions and their concentration, impurity substances, etc.), operating mode and pipeline conditions must not lead to corrosion and/or sediments affecting the performance and metrological characteristics of the flowmeter.

2.1.5. Grounding system is arranged according depending on power supply value and environment conditions.

2.1.6. Lightning protection system for the site where the flowmeter is located protects the device against failures caused by lightning strokes.

2.1.7. Mounting location and operating conditions requirements specified in this operating documentation are based on the most typical factors affecting flowmeter performance.

The external factors that cannot be foreseen, evaluated or tested by the manufacturer during designing may exist or appear on site.

In this case, it is necessary to eliminate these factors or place the flowmeter in other location.

2.2. Preparing for operation

2.2.1. Safety instructions

2.2.1.1. The flowmeter should only be used by the technical staff familiar with all operating documentation for the product.

2.2.1.2. When working with the flowmeter, the dangerous factors are as follows:

- AC voltage (RMS value up to 264 V, frequency 50 Hz)
- Pipeline pressure (up to 2.5 MPa)
- Liquid temperature (up to 160 °C)
- Other site-specific factors.

2.2.1.3. The CS must not be operated without proper grounding.

2.2.1.4. On detecting external defects on the device or damages to mains cabling, you must remove power from the device and contact the authorised technician for the information about the device's operability.

2.2.1.5. In the course of mounting, start-up or repair works you must not:

- Make connections to the flowmeter, switch over modes and replace electronic components, when the flowmeter is powered up
- Use defective electronic devices and electric tools or use them without proper grounding (neutral earthing).

2.2.2. On-site mounting and adjustment of the flowmeter shall be performed according to the Installation Manual.

The works should be performed by authorized dealers or by the manufacturer.

2.2.3. When putting the flowmeter into operation, check the following:

- The flowmeter and related equipment are connected in accordance with the selected wiring diagram
- Flowmeter's components and connection cables correspond to the characteristics of a certain measuring channel. The correspondence is checked in accordance with the procedure described in the Installation Manual
- Power supply voltage corresponds to the specifications.

Besides the above, it is necessary to make sure that actual operation settings in the flowmeter comply with the values specified in the Equipment Certificates for the flowmeter and primary converters or in the Report on mounting and start-up procedure.

To protect the equipment from unauthorized access, two fixing screws accessed from the CS front panel side can be sealed after putting the flowmeter into operation.

3. MAINTENANCE

3.1. It is recommended to check on regular basis that:

- Performance complies with the specifications
- Operating conditions are met
- Power supply characteristics are within the required ranges
- No external defects are detected
- Electrical and mechanical parts are reliably connected.

Check periods depend on operating conditions but should not exceed two weeks.

It is recommended to check the internal of the PS for sediments, residue, and scale on regular basis (the period depends on operating conditions) and clean it out from all the deposits.

3.2. If the operating conditions specified in sections 1.2.7 and 2.1 are not observed, this may lead to the flowmeter's fault, or the permissible limits of relative measurement error may be impaired.

External defects on the flowmeter's components or power cable can also lead to the flowmeter's fault or growth of the permissible limits of relative measurement error. Therefore, when the above-specified external defects are detected, contact the manufacturer's representative office for the information about the device's operability.

3.3. The presence of display indication means that power is applied to the flowmeter, the indicated information gives an idea of the flowmeter's performance. The list of possible faults indicated by the flowmeter is given in Part II of this manual.

Alarm (ER) situations are also indicated by status words. An ER situation is an event characterized by mismatch of measured values and flowmeter metrological characteristics, or by impossibility of measurements due to the violation of measurement conditions.

3.4. Regarding the design and operating conditions, the flowmeter refers to the devices that should be repaired by authorized dealers or by the manufacturer.

The error is localized on the site to an accuracy of a block: CS, SPS, PEA blocks or connection cable; faulty components are replaced by operable ones. If one PEA is faulty, both PEA pairs are replaced.

CAUTION! After replacement of the CS, PEAs or connection cables with PEAs, it is necessary to determine the values of dT_0 and P_{add} parameters for the corresponding measuring channel, and enter the values into the flowmeter. The procedure for determining dT_0 and P_{add} is described in Part II of this manual.

3.5. When the flowmeter is sent for warranty repair, the Passport shall be enclosed. Please specify post details, phone/fax numbers along with the way and address for redispatching.

When the device is dispatched for verification or repair complete with the PS, measuring parts and emitting surfaces of cut-in PEAs should be cleaned off sediments, residue, scale, etc.

4. PACKING, STORAGE AND TRANSPORTATION

4.1. **"IOTAFLOW UF"** flowmeter is packed into a separate container (corrugated carton or wooden box) along with the operational documentation.

Pipeline sections and fittings are delivered as a separate box.

4.2. The flowmeter should be kept in the manufacturer's box in a dry heated storeroom. The storeroom should be free from current-conductive dust, acid or alkali fumes and aggressive gases that may damage insulation.

During storage the flowmeter does not require any special maintenance.

4.3. The flowmeters can be transported by road, rail, sea or air provided that the following requirements are met:

- Flowmeter is transported packed in the manufacturer's box
- Protection against moisture is provided
- Temperature is within the range of - 30 to + 50 °C
- Humidity does not exceed 98 % at + 35 °C
- Vibration is within the range of 10-500 Hz with maximum 0.35 mm amplitude or 49 m/s^2
- Impact acceleration does not exceed 98 m/s^2
- Flowmeters are fixed to prevent damages.

APPENDIX A. View of components

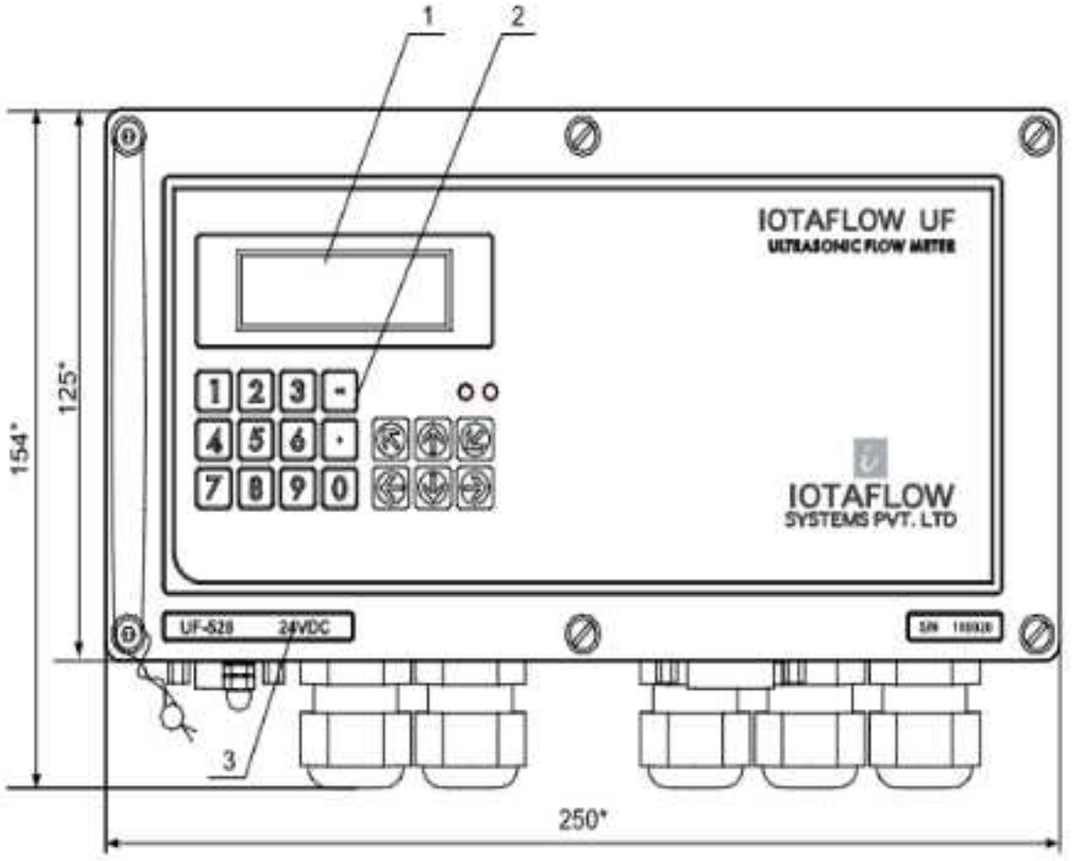

a) front view

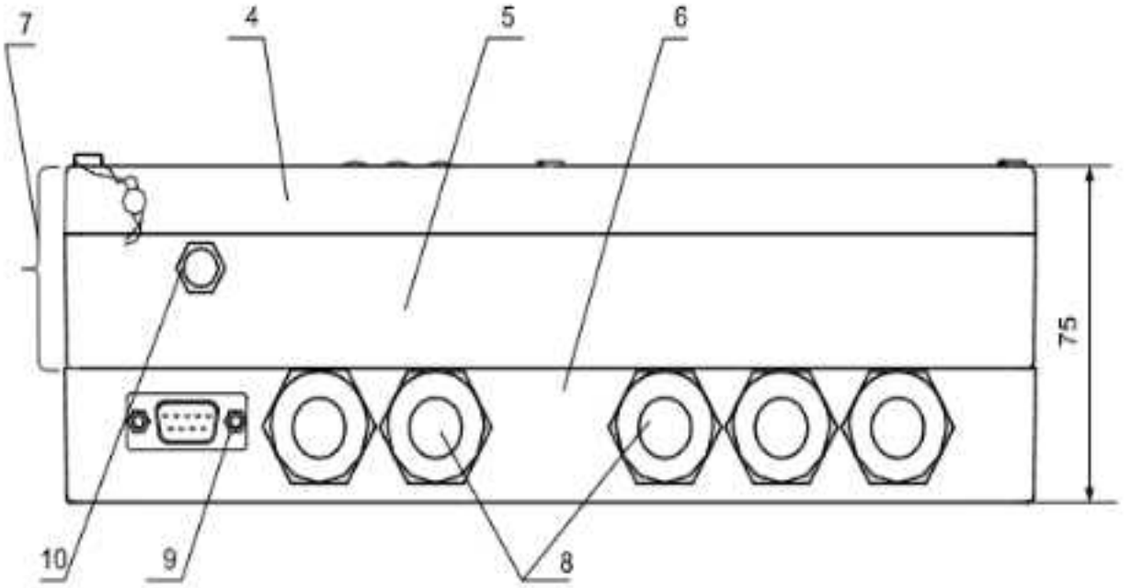

b) bottom view

* - reference dimension

1 – indicator; 2 – keyboard; 3 – power supply indication; 4 – Data Processing module; 5 – SPS module; 6 – Mount module; 7 – Data Processing Subblock; 8 – cable glands; 9 – RS-232 connector; 10 – grounding terminal.

Fig.A.1. Secondary Converter

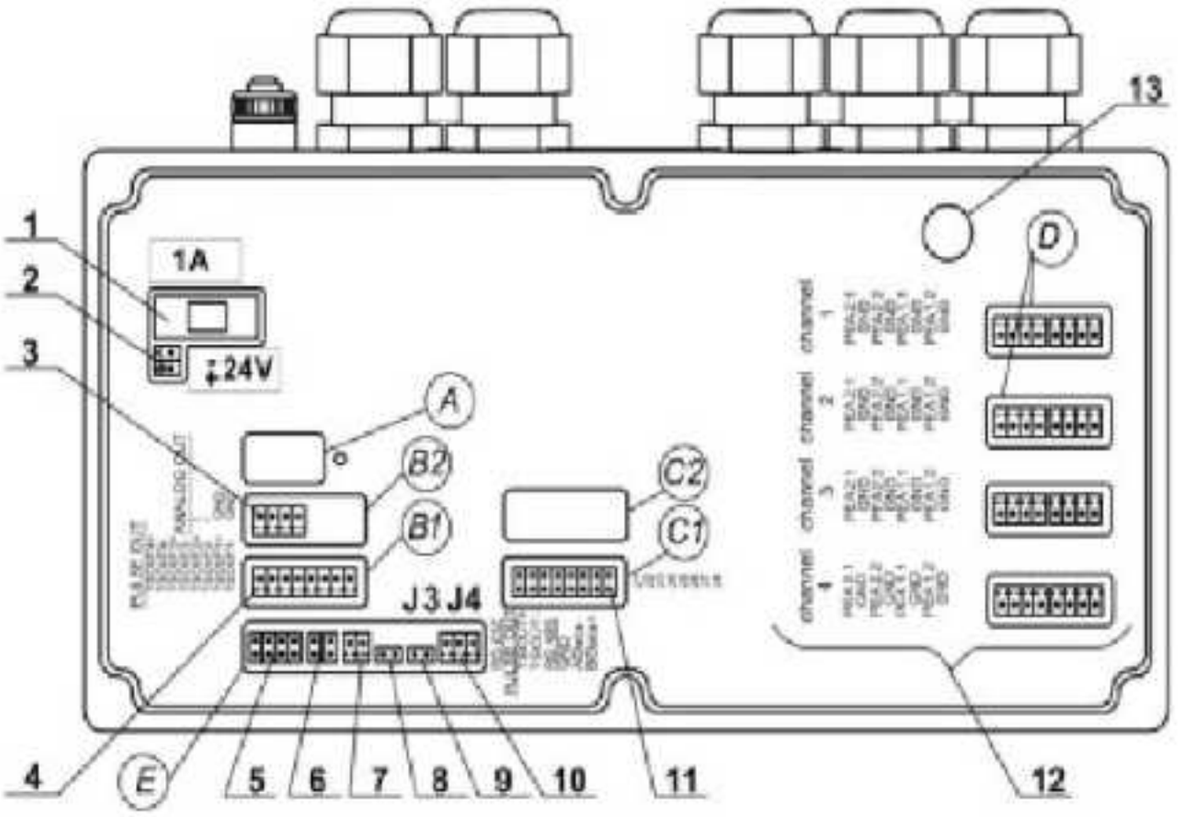

Fig.A.2. Data Processing subblock of the CS; bottom view

A – reserve window;
B1, C1 – windows for connectors of the Service module mounted into Slot 1;
B2, C2 – windows for connectors of the Service module mounted into Slot 2;
E – window for connectors of the "RS-232 / RS-485 / Universal output 0" Combined Module;
D – window for connectors of the transmitting/receiving modules;
1 – Fuse terminal block (1 A, DC 24V);
2 – DC 24 V power supply connector;
3 – Analog output connector, output 2, Service module;
4 – Universal outputs connector, outputs 1-4, Service module;
5 – RS-232 Interface connector, Combined module;
6 – J2, J1 terminals used to set operation modes for Universal output 0, Combined module;
7 – "Universal output 0" connector, Combined module;
8, 9 – J3, J4 terminals used to set flowmeter's operation modes on the Combined module;
10 – RS-485 Interface connector, Combined module;
11 – terminals used to set operation modules for Universal outputs 1-4, Service module;
12 – connectors of the Transmitting/Receiving modules for connection of communication cables with PEAs;
13 – hole with a cap used to connect quartz frequency measuring cable (service connector used for flowmeter's verification).

Identification of connectors
on the RS-232 / RS-485/Universal output 0
Combined module, E window

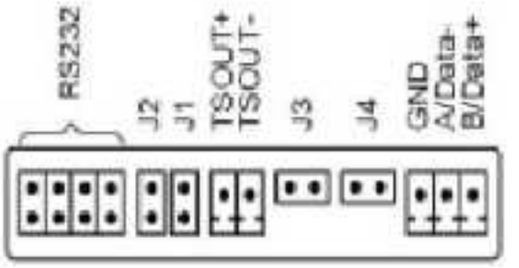

NOTES: The cable from an external RS-232 connector is connected to the RS-232 connector located on the Mount module (see Fig. A.1).

Connectors located on the Communication Subblock of the Service modules are marked according to Table A.1.

Table A.1.

Output	Number of the slot where the module is installed	Output signals		Terminals	
		How the window is marked in Fig.A.2	Signals	How the window is marked in Fig.A.2	Terminals
Universal 1	1	B1	TSOUT1 +/-	C1	J1, J2
Universal 2			TSOUT2 +/-		J3, J4
Universal 3			TSOUT3 +/-		J5, J6
Universal 4			TSOUT4 +/-		J7, J8
Universal 5	2	B2	TSOUT1 +/-	C2	J1, J2
Universal 6			TSOUT2 +/-		J3, J4
Universal 7			TSOUT3 +/-		J5, J6
Universal 8			TSOUT4 +/-		J7, J8
Current 1	1	B1	I / GND	C1	-
Current 2	2	B2	I / GND	C2	-

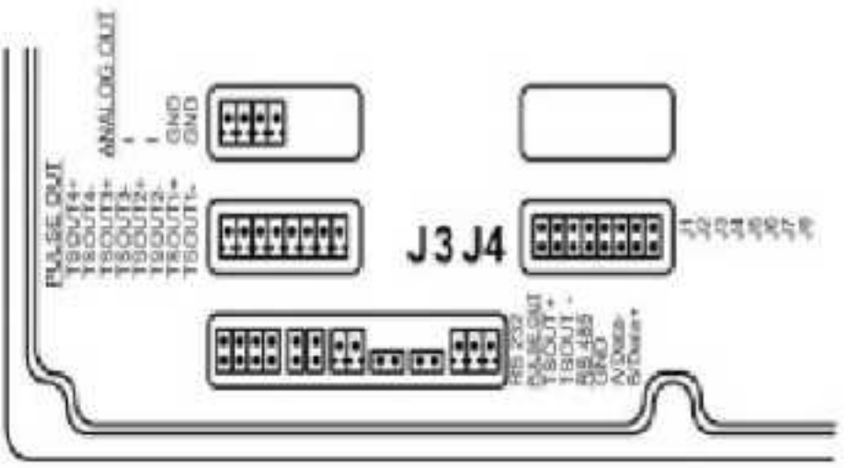

Fig.A.3. Example of marking the elements on the Communication Subblock of the Combined module and two Universal output modules

The socket soldering

circuit	No contact on subblock	No contact on RJ45	
		for connection to a network	for connection to a PC
TX+	1	1	3
TX-	2	2	6
RX+	3	3	1
RX-	4	6	2

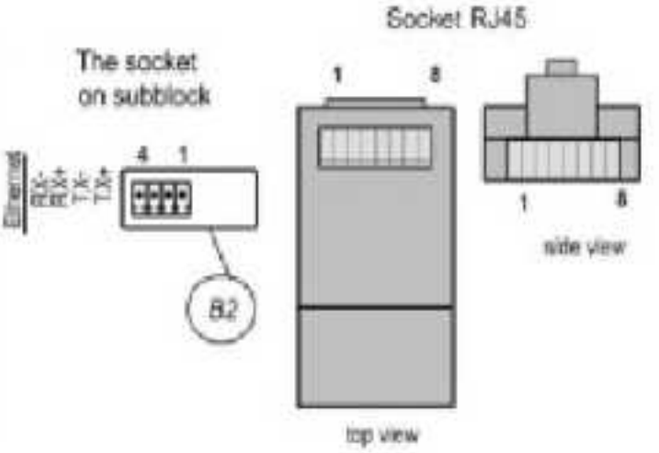

Fig.A.4. Ethernet connector in B2 window.

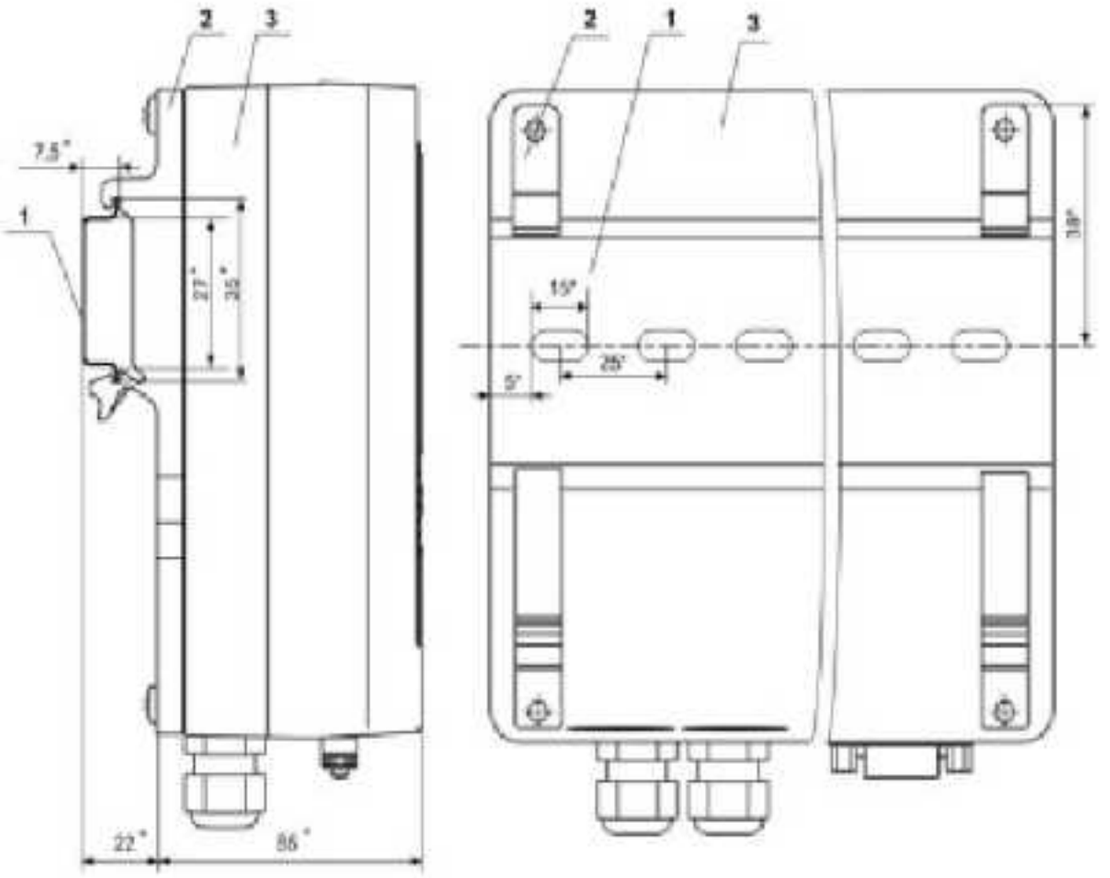

** - reference dimension*

1 – DIN- rail; 2 – bracket; 3 – Mount module.

Fig.A.5. Mounting the CS on DIN-rail

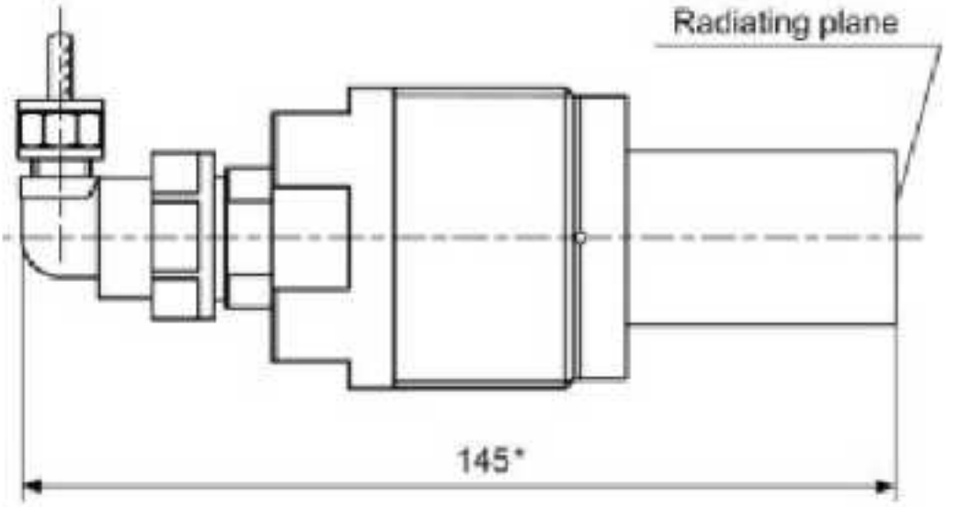

a) with plastic protection

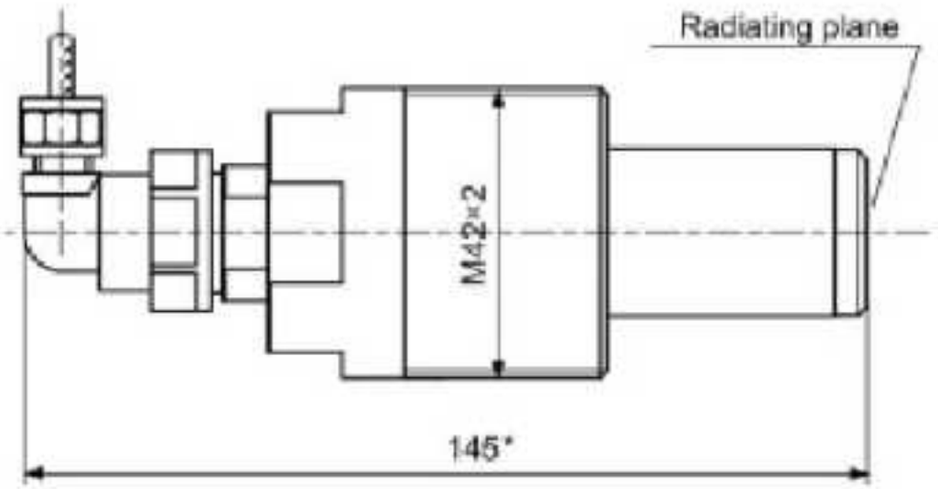

b) with titanium protection

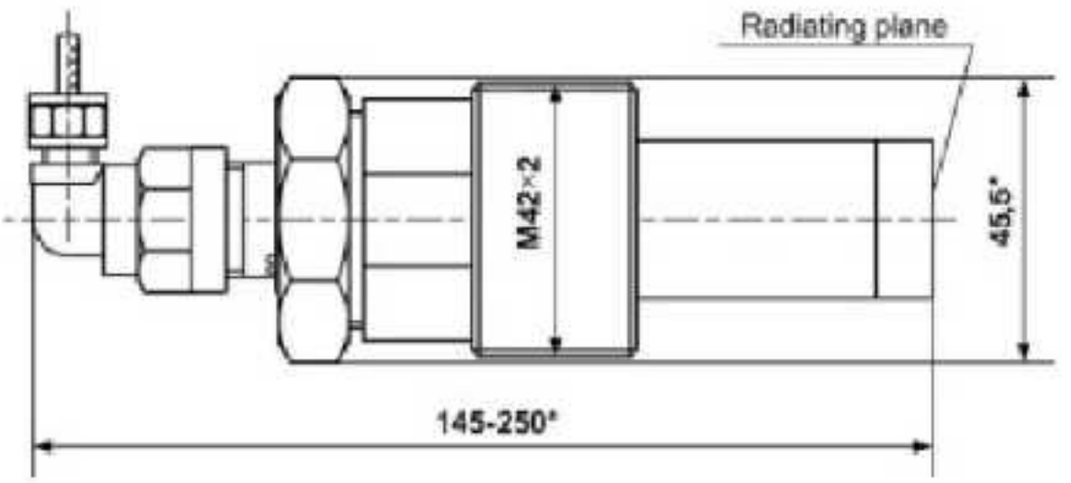

c) with titanium protection and cap nut

Weight is no more than 1 kg

** - reference dimension*

Fig.A.6. Cut-in (screwable) PEA

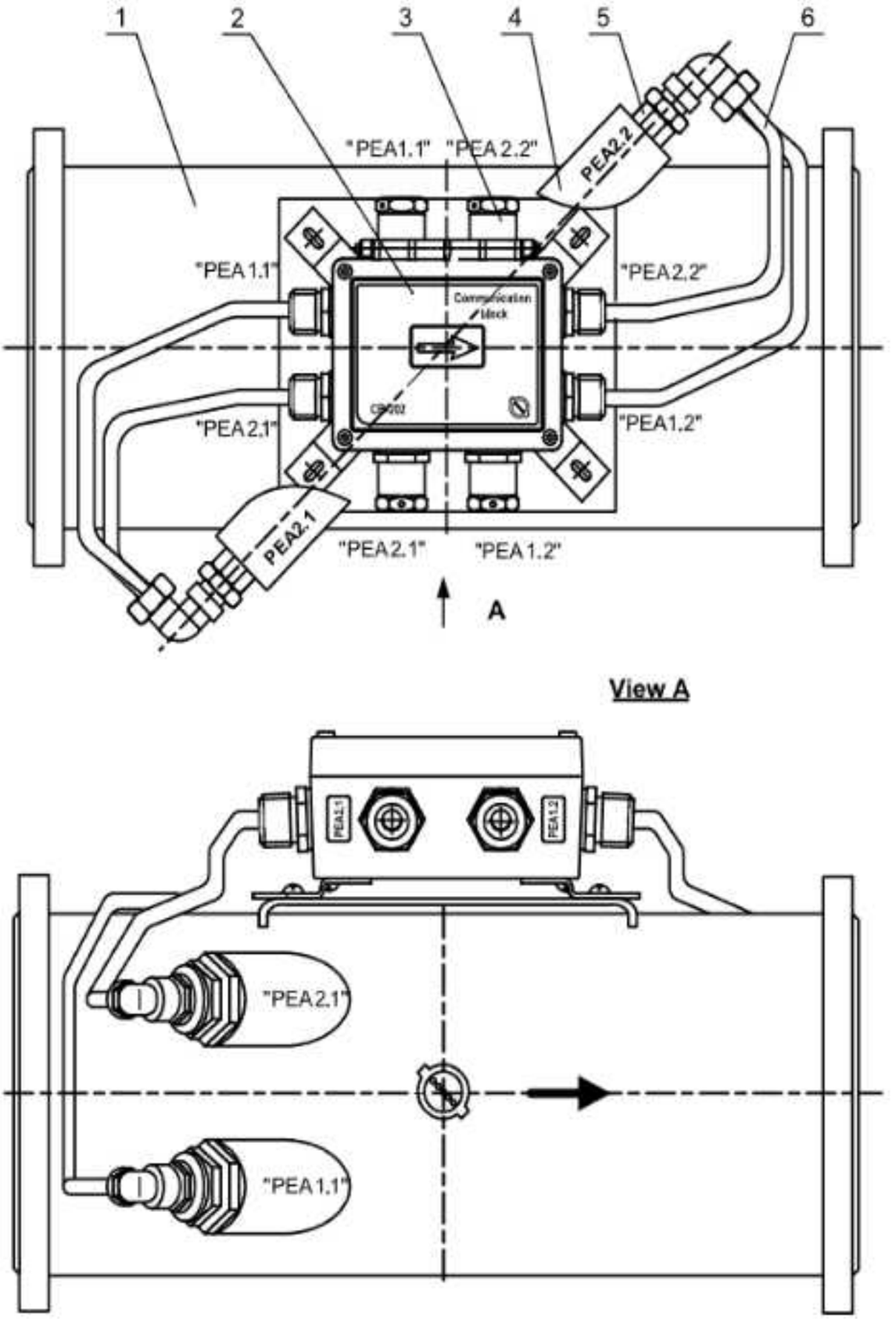

1 – pipeline section; 2 – communication block; 3 – CS connection cable through; 4 – pipe mount adaptor for mounting cut-in PEAs; 5 – cut-in PEA; 6 – PEA output in a copper sleeve

Fig.A.7. CP installed on PS-042 pipeline section with Communication block (two-beam sounding method, PEAs positioned on chords).

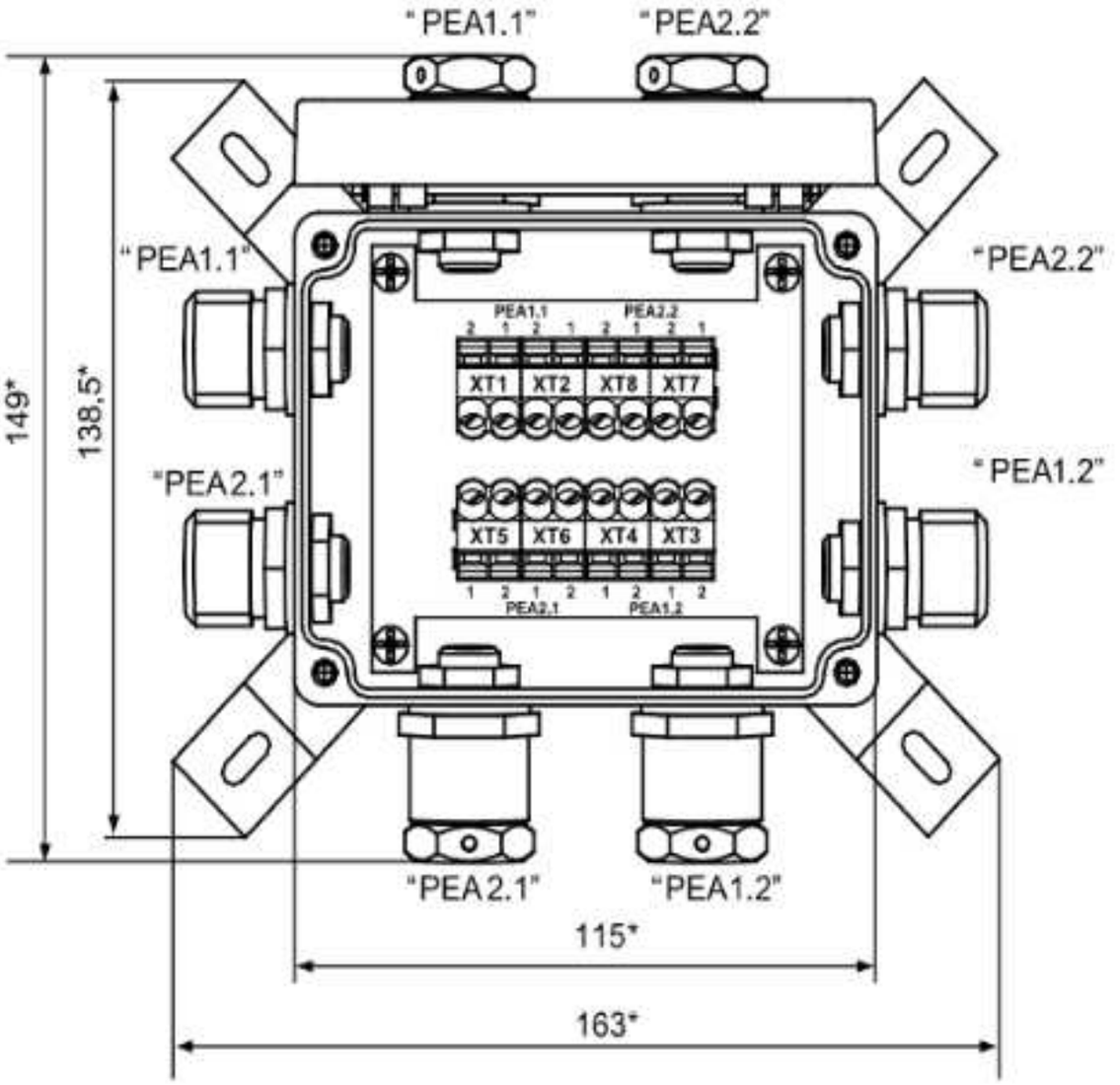

** - reference dimension*

Fig.A.8. Communication block (two-channel version) for PS-042 pipeline section (view with cover removed)

APPENDIX B. Wiring diagrams

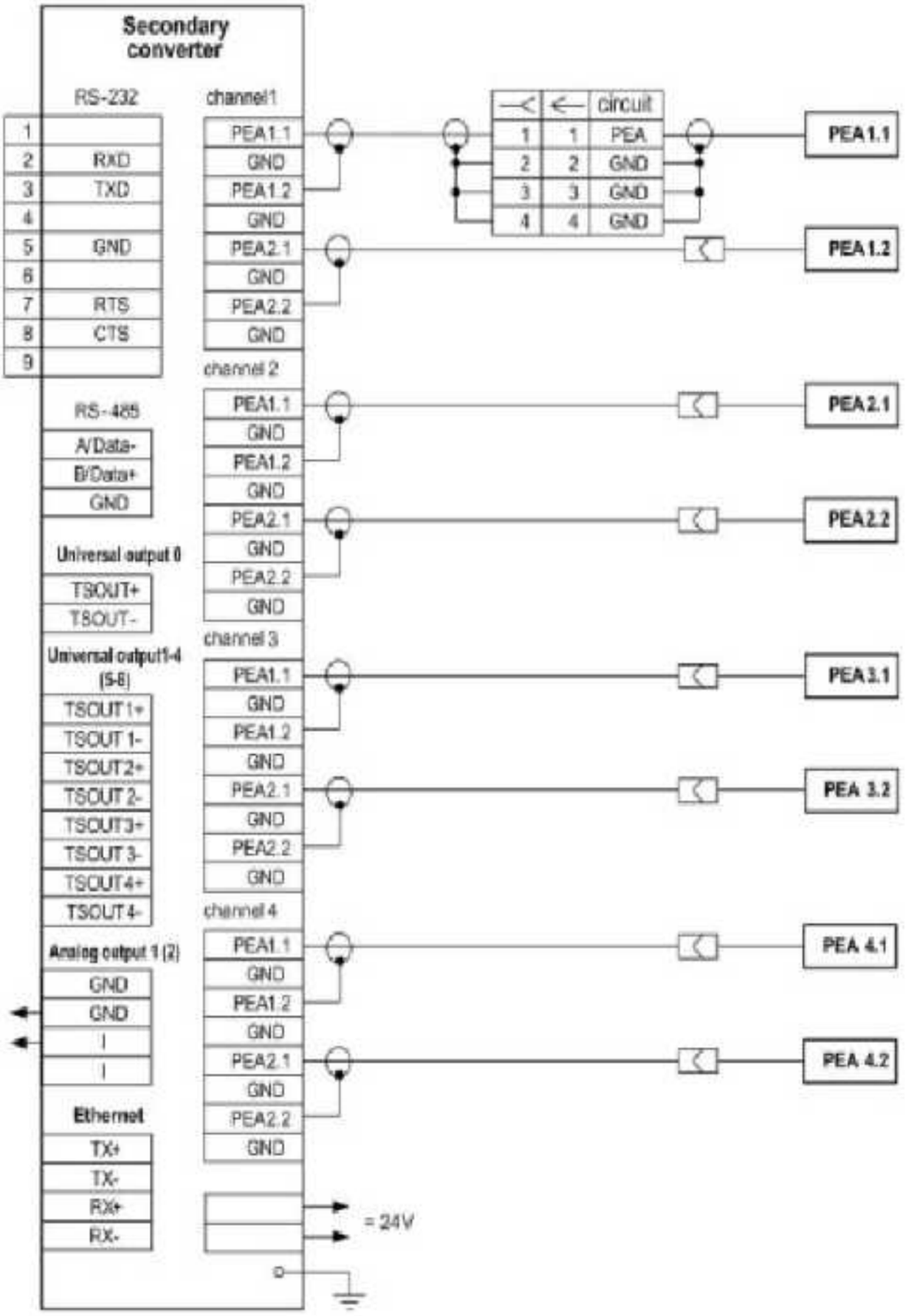

Fig.B.1. UF-54X d flowmeter wiring diagram

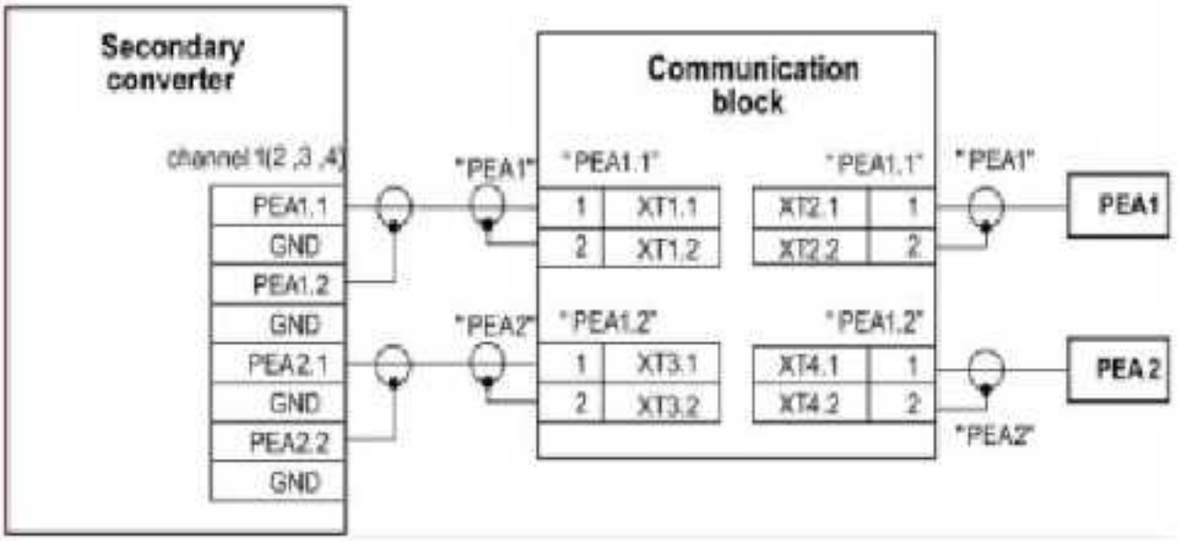

Fig.B.2. PEA connection diagram with use of Communication block, asymmetrical connection method

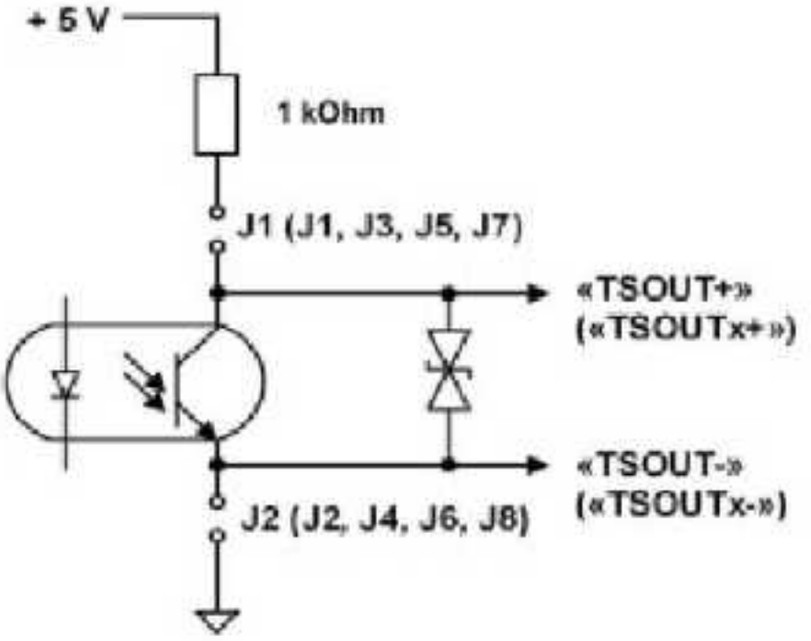

Fig.B.3. Universal outputs, circuit diagram of output stages

To match output stages to inputs of different types, the output stages are designed to work with either the internal galvanically isolated power source (active mode) or an external power source (passive mode). In standard supply configuration the output stages are in the passive mode.

Identifiers for the universal outputs are given in brackets.

In the active mode and in case that **Active level parameter** is set to <**high**>, output voltage in the logic mode and pulse amplitude in the pulse mode is within 2.4 to 5.0 V. In case of no pulse or at logic <**low**> the output voltage is less than 0.4 V. External load resistance shall be 1 kOhm as a minimum.

In the passive mode, power from an external power source with output DC voltage from 5 to15 V can be applied. Permissible value of external load current is no more than 10 mA.

Connection of the output stage to the internal power source +5 V is made by placing jumpers between the corresponding terminals.

For the universal outputs, length of signal cables should be up to 300 m.

IOTAFLOW
SYSTEMS PVT. LTD

WITH CUT - IN CONVERTERS

VERSION UF - 5xx d
OPERATION MANUAL PART I

Contact Us:-

IOTAFLOW SYSTEMS PVT. LTD.

A-2/13, Mayapuri Industrial Area
Phase-II, New Delhi - 110064
Phones: +91-11-4625 4601-06
Call: +919910693866
email: contact@iotaflow.com

Specifications subject to change without prior notice. © Iotaflow Systems Pvt. Ltd.

" If You Want To Manage It, Measure It "

www.iotaflow.com

IOTAFLOW
SYSTEMS PVT. LTD

WITH CUT - IN CONVERTERS

VERSION UF - 5xx d
OPERATION MANUAL PART II

ULTRASONIC FLOW METER

TABLE OF CONTENTS

Page

INTRODUCTION 3

1. OPERATING THE FLOWMETER 4

    1.1. Controlling Indication 4

    1.2. Entering Settings Values and Commands 6

2. CONFIGURING PRIOR TO OPERATION 7

    2.1. Entering Setting Values for PEAs 7

    2.2. Defining zero offset dT0 7

    2.3. Determining the Additional Lag (Padd) 8

    2.4. Settings for Processing of Measurement Results 8

    2.5. Flowmeter Date and Time Correction 9

    2.6. Setting Transition to "Daylight Saving" / "Standard" Time Mode 9

    2.7. Setting KC and Kp factors 9

3. OPERATION PROCEDURE 11

    3.1. Displaying calculated values 11

    3.2. Controlling Batching 11

    3.3. Viewing logs and historical data 13

4. TROUBLESHOOTING 14

    APPENDIX A. Display System 16

    APPENDIX B. Displayed Parameters 25

    APPENDIX C. Functions and Identification of Keyboard Keys (Buttons) 33

    APPENDIX D. Status Words and Troubleshooting 34

This document covers ultrasonic flowmeters **"IOTAFLOW UF"** of UF-510 d, -520 d, -522 d, -530 d, -540 d, -542 d, -544 d versions with cut-in converters, and is intended as a guide for its proper use.

LIST OF ABBREVIATIONS

CS	- Secondary measuring converter
PS	- Pipeline section
ER	- Error
PEA	- Electro-acoustic converter
USS	- Ultrasonic signal.

NOTE. Words in the text marked in bold, for example, **Settings** correspond to the items displayed on the flowmeter's screen.

1. OPERATING THE FLOWMETER

Flowmeter's operation in various modes can be controlled from the CS (secondary measuring converter) keyboard via the hierarchical menu system and indication windows shown on the display, or from a PC either via serial RS-232, RS-485 interfaces or via Ethernet.

1.1. Controlling Indication

1.1.1. To control the flowmeter from the CS keyboard, you use the hierarchical menu system (see Appendix A) consisting of the main menu, submenus and windows which give access to the lists of commands and options. The composition and structure of the main menu (Fig.1) is constant. Number and contents of submenus and windows as well as settings available for modification depend on the flowmeter's operating mode.

1.1.2. The CS keyboard has eighteen buttons, functionality and description of which are given in Appendix C.

The keyboard allows you to do the following:

- Navigate the hierarchical menu and windows
- Efficiently control indication on the display
- Input configuration data
- View data and status logs.

1.1.3. The display shows the menu (window) name which is displayed in the first line of the LCD indicator, and menu items (options) which can be moved up or down (see Fig.1).

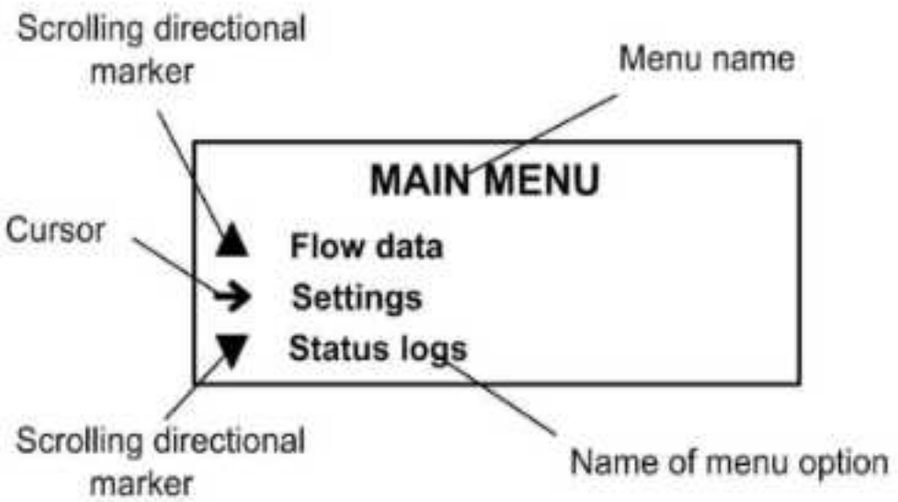

Fig.1. The Main menu.

1.1.4. To indicate a selected menu item, an option, a digit of a number or a substring being edited you use the cursor. The cursor appearance and position depend on whether it possible to modify the data indicated in the current line. Your options:

➔ - To navigate to a low-level menu (window)

▶ - To modify a setting or a command (status) shown in this line

■ - It is impossible to modify the setting (for some settings, it is possible to zoom indication in)

▬ - To modify a digit which has the blinking cursor under it

◀ ▶ - To modify the part of a line contents in angle brackets.

1.1.5. Number of lines (menu items, list options) indicated on the display cannot exceed 3 at a time. Scroll direction indicators may therefore be shown at the beginning of the first and the last lines of menu items (or options). These indicators are triangles (see Fig.1) with vertexes showing the directions where the cursor can navigate through the lines (menu items, and settings).

Buttons ↑, ↓ let you scroll the list up or down to select a menu item (a setting).

When you press the button ↓ for the first time the cursor moves one line up and stops between the scroll direction indicators. Subsequent pressings of the ↓ button start scrolling menu items (setting), the cursor and the scroll direction indicators being fixed at that time. When the last menu item (setting) is reached the cursor moves to the last line and stops in the place of the lower scroll indicator.

The procedure of searching the list in the opposite direction using button ↑ is similar.

1.1.6. To navigate to a lower level menu (window) or to activate a menu item (a setting) you need to set this menu item (a setting) and the cursor ➔ (▶) in the same line and press button ↙.

To return to a parent window (menu) press button ↖.

To leave active state without changing a setting value, press button ↖, while pressing button ↙ first lets you give a new value to a setting.

1.1.7. Several menus (windows) which have similar contents but different ownership can be subsequently displayed in one menu (window). Menu (window) ownership is indicated by the sequential number of output, record in the menu (window) name line in the log or by specifying the historical record logging range.

Whether sequential search of related menus (windows) is enabled, it is indicated by symbol ♦ to the left of the menu (window) which contains the sequential number. To navigate to another related menu (window) use buttons ←, →.

1.1.8. You may choose the font of greater size to display settings and measured values. The window with zoomed indication opens after selecting the name of a parameter and pressing button ↙.

1.2. Entering Settings Values and Commands

1.2.1. To modify a setting value or a command you shall open an appropriate menu (window), match the required line of the list with the cursor that looks like ▶ and press button. You can set a new value either digit by digit (numeric value) or by selecting it from the list.

1.2.2. Entering a numeric value digit by digit.

If you are setting a numeric value digit by digit, then after pressing button cursor ▶ will transform to a blinking cursor ▬ positioned under the first digit of a numeric value, or digit by digit setting window will open with a similar blinking cursor ▬ under the first digit of a number. To modify an existing value you have either to enter a new setting value using buttons 0 ... 9 or to change digits on their positions using buttons ↑, ↓.

Pressing button ↑ (↓) once makes the digit marked by the cursor to increase (decrease) by one. To move the cursor to another digit, press buttons ←, →.

By pressing button you enter the assigned numeric setting value, while pressing button will cancel the procedure (return back to a previous value).

1.2.3. Entering a setting value, a command or an identifier by selecting from a list.

If a setting value (command, identifier) is selected from a list, then after pressing button cursor ▶ will transform into triangle brackets ◀ ▶ around the setting value (command, identifier) which now can be modified.

Pressing buttons ↑, ↓ or ←, → allows you to navigate through the values. By pressing button you can enter the assigned numeric setting value, pressing button enables you to cancel the procedure (return back to the previous value).

2. CONFIGURING PRIOR TO OPERATION

2.1. Entering Setting Values for PEAs

Open **Settings / Main settings** menu and enter:

- **Transducer: Wetted** – PEA type
- **Mount. mode**: **Diameter, Chords** or **U-elbow** – PEA mounting diagram.

Open **Settings / Main settings / Install. settings** menu and enter setting values specified in table 1 depending on the mounting scheme of transducers. 1.

Table 1

Setting Name and Identifier	PEA installed on diameter	PEA on chords	PEA U-elbow
Lcirc – average outside diameter circumference of the pipeline section;	+	+	-
Do – average outside diameter of the pipeline section;	+	+	-
Di – inner diameter of the pipeline	-	-	+
Dtr – average outside PS diameter of the pipeline section in the PEA longitudinal plane;	+	-	-
hw – average PS wall thickness	+	+	-
L – distance between radiating planes of the PEA pair	+	+	+
Lx – distance between the centres of radiating planes of the PEA pair along the pipeline axis;	+	+	-
Lax – distance between the flow inlet points into the straight section of the U-elbow	-	-	+
d – PS inner wall asperity	+	-	-
v – kinematic viscosity of the liquid in the pipeline.	+	-	+

2.2. Defining zero offset dT0

2.2.1. Zero offset **dT0** shall be defined when the flow in the pipeline is fully stopped. Open **Settings** menu and select **Calibration / Zero calibration / Automated / Run calibr** line. Start calibration procedure by selecting **Start** value. After calibration is stopped (to do this assign **Stop.** value to **Run calibr** setting) and the device returns to **ZERO CALIBR. chan. X** window, **dT0** setting will be automatically set to the value calculated by the flowmeter.

In case it is impossible to absolutely stop the flow of liquid in the pipeline, you may determine zero offset as follows:

- When the flowrate value lies in the range 0.1Qmax – Qmax the **dT0** setting is defined according to the foregoing procedure – dT_{01}
- For PEAs, signal cables connection of the PEA pair is reciprocally swapped either at the PEAs or at the secondary measuring converter CS, and after that the **dT0** value is determined again – dT_{02}. Its sign shall change after that.

The required value of zero offset is calculated from the formula:

$$dT_0 = 0.5\,(|dT_{01}| - |dT_{02}|),\ \mu s.$$

2.2.2. The calculated value is assigned to the **dT0** setting in the flowmeter and recorded to the log. After that, the initial connection of PEA cables is restored.

2.3. Determining the Additional Lag (Padd)

The **Padd** setting value is determined as follows. Open **Settings** menu and select **Calibration / Add. delay calibr. / Padd CALIBR. chan. X** line and enter tabular value of sound velocity **Cref**. After that, you need to activate **Automated** option and start calibration procedure (set **Start** value for **Run calibr.** parameter). After calibration procedure is stopped (to do this specify **Stop.** value for **Run calibr** setting) and you return to **Padd CALIBR. chan. X** window, **Padd** setting will be automatically set to the value calculated by the flowmeter.

The calculated value of **Padd** setting is logged into the check form which is given in the Installation Manual.

NOTE. When measuring flowrate in water and heat supply systems, the ultrasound velocity is determined in accordance with Appendix D of the Installation Manual. When measuring flowrate of other liquids, the ultrasound velocity is determined according to special tables for measured liquids. The ultrasound velocity shall be entered into the flowmeter 5 minutes after determining at the latest.

2.4. Settings for Processing of Measurement Results

2.4.1. Open **Settings / Processing settings** menu and enter setting value:

- **Median** – median averaging buffer size
- **Mean** – arithmetic averaging buffer size
- **KP** – exponential filter factor (0.95 by default)
- **Inert. time** – lag (it is not advisable to set it to less than 10 s)
- **Accel.** – maximum speed of flow velocity variation
- **Cut.** – minimal flowrate cutoff
- **LW** – low setpoint for flowrate
- **UP** – high setpoint for flowrate
- **Vmax** – correction of the flowrate values up to which volume calculation is performed
- **Flow sign** – liquid flow direction sign
- **Units** – flowrate (volume) dimension
- **Config.** – flowmeter configuration.

2.4.2. It also necessary to check whether the displayed flowrate sign ("**+**" or "**–**") corresponds with the actual flow direction in the pipeline. In case it does not correspond, it is necessary to check the correctness of mounting pipeline section or PEA pair connection considering the flow direction. If mounting and connection are performed correctly, you shall check **Flow sign** setting value (sign).

2.4.3. **Settings / System settings / Connection settings** and **Settings / Periphery settings** menu lets you configure settings to coordinate work of flowmeter outputs with inputs of connected devices and equipment (see Figs A.5, A.6 in Appendix A and tables B.4, B.5 of Appendix B).

In case of necessity, **Settings / System settings / Total flow reset** lets you perform the totalizer zeroing procedure.

2.5. Flowmeter Date and Time Correction

To adjust date and time you shall select and activate **Settings / System settings / Time settings / Date (Time)**, and then using buttons ⬅, ➡ set the cursor ▬ to "day", "month", "year" ("hours", "minutes", "seconds") positions. Using buttons 0...9 or ⬆,⬇ modify selected setting value in each position. Press button ↙ to enter the setting value, and to cancel entering (to return to previous value) press button ↖.

2.6. Setting Transition to "Daylight Saving" / "Standard" Time Mode

2.6.1. The flowmeter is capable of setting the device clock to "Daylight Saving" / "Standard" time automatically. The user can:

- Set the device clock transition mode
- Turn off the device clock transition functionality.

Two device clock transition modes are provided: standard and user-defined.

In standard mode, the transition to "daylight saving" time takes place at 2:00:00 a.m. of the last Sunday of March the clock being put one hour forward, and to "standard" time at 3:00:00 a.m. of the last Sunday of October the clock being put one hour back. In user-defined mode, the user can set the transition time. In case the transition functionality is turned off the device clock keep time countdown according to "standard" time only.

2.6.2. To set the transition mode, activate **Settings / System settings / Time settings / Time mode change / Mode** option and select one of the following values: **standard** or **user-defined**.

In the Standard mode, you may see the date and time of automatic transitions to "daylight saving" and "standard" time in **Daylight saving time** and **Standard time** windows, respectively.

In the User-defined mode, you can set time of transition to "daylight saving" and "winter" time in **Daylight saving time** и **Standard time** windows, respectively, following instructions in p.1.2.2.

If **Mode** setting is set to **no change** then **Daylight saving time** and **Standard time** menu items become unavailable.

2.7. Setting KC and Kp factors

2.7.1. The **KC** (**Kp**) factor is calculated in **Settings / Periphery settings / Universal output *X* (Type frequency) / Setup / FREQUENCY OUTPUT *X*** (**PULSE OUTPUT *X***) menu.

To calculate the **KC** factor, open **FREQUENCY OUTPUT *X*** menu and first enter **Qut**, **Qlt** и **Fmax** values according to p.1.2. After that, us-

ing buttons ↑, ↓ align **KC calcul. ...** line with the cursor ▶ and press the button. Dots in the end of **KC calcul. ...** line become enclosed in the triangle brackets ◀ ▶.

To start the calculation procedure you need to press ↑ button and then, after dots within the triangle brackets are substituted with the **Start** word – button. Consequently, **Start** is again substituted with dots, and one line up the **KC** value is displayed.

2.7.2. To calculate the **Kp** factor open menu **PULSE OUTPUT *X*** and enter values for **Qut** and τ settings. Calculation procedure for **Kp** is similar to that for **KC**.

If the calculated **KC** (**Kp**) value does not suit the user for whatsoever reason he can set a lesser value for **KC** (and a greater – for **Kp**). Meanwhile, **Qut**, **Qlt** and **Fmax** (**Qut** and τ) values do not change.

If, considering the frequency (pulse width), the **KC** (**Kp**) value is set to a wrong value, the alarm message will appear.

3. OPERATION PROCEDURE

3.1. Displaying calculated values

The user can operate the flowmeter via either keyboard and display or RS-232 / RS-485 interface.

3.1.1. After powering on the flowmeter the CS display shows the device information. Upon self test completion the main menu is displayed with the cursor ➔ opposite to the line **Flow data**.

3.1.2. Press button ↙ to switch to displaying of measured values, buttons ←, → – to select the required channel number, and buttons ↑, ↓ – to select the characteristic to be displayed. To switch to zoomed indication of measured values hover the cursor ■ over the required characteristic name and press button ↙.

3.1.3. After putting into operation the flowmeter works in the automatic mode.

3.1.4. Zoomed indication window contains, besides the setting name, measurement units and the setting value, part of the sign-position code of the current channel status word. The complete channel status word (see table D.1) s displayed in menu **Status logs / Current status** (**CURR. STATUS chan.** *X*).

To determine the alarm situation (ER) type that occur in the measurement channel and is displayed in the window of zoomed indication of measured value as the " **×** " character in the status word, open window **Status logs / Current status** (**CURR. STATUS chan.** *X*) / **ER** (**ER chan.** *X*) of the corresponding channel. Besides the ER type name, this window will display the ER duration and date and time of ER start.

3.2. Controlling Batching

3.2.1. There are two ways of batching:

- Batching of preset amount of liquid
- Batching in the "start-stop" mode.

3.2.2. The ways to preset volume of liquid are:

- To enter **Ve** setting value before batching
- To select one of the batching options **BATCH1** ... **BATCH8** values of which are entered and stored in the flowmeter beforehand.

To enter the **Ve** value, it is necessary to:

- Select the way to preset the batch – (**Flow data / Batching / Sel. batch**)
- Activate option **Ve**
- Enter batch value – to carry out actions defined in section1.2.2.

Activate option **Sel. batch** and using buttons ↑, ↓ or ← → choose one of the batching options in the emerged triangle brackets ◄ ►. After that, press button ↙. Selected batch value will be displayed in the **Ve** option line. Batch values for **BATCH1**...**BATCH8** are entered in the window **SETTINGS / Batch list / BATCH SETUP *X*** before batching process starts.

Batching process starts when operator gives the command to batch using either the CS keyboard or serial interface. Batching process stops automatically when the preset batch value is accumulated or when the operator gives the command (before the preset batch is accumulated).

3.2.3. To make "start-stop" batching possible assign zero value to **Ve** value. The operator starts and stops batching via serial interface or using the CS keyboard.

3.2.4. Batching procedure

The word **START** in **Flow data / Batching / BATCHER X / Batch** line shows that batching process has not started yet. To start batching process select **Batch** option pressing button ↙.

After this, batching process starts and lower level window **BATCH. X** opens displaying **IN PROCESS** in the same line with the window name. Additionally, this window displays the preset **Ve**, and measured **Vb** batch volume values and batching time **Tmeas**.

Batch accumulation stops either when accumulated volume equals the preset value or when the operator gives the command. In the "start-stop" mode, the batching process stops only when the operator gives the command.

To stop the batching process, select option **Ctrl.** in this window, and press button ↙. After the batching process has been stopped words **IN PROCESS** are substituted by the word **COMPLETED**, **STOP** in line **Ctrl.** changes to **START**, and lines **Vb** and **Tmeas** display the measured batch volume and the corresponding batching time.

Next start of the batching process is performed by pressing button ↙ too. Values of settings **Vb** and **Tmeas** are nullified, **COMPLETED** is replaced with **IN PROCESS**, and **START** – with **STOP**.

3.2.5. Upon batching completion (after the preset batch volume is accumulated or the batching process is stopped by the operator) the flowmeter:

- Produces through a universal output when batching is completed a pulse or a logical signal, parameters of which depend upon the output working mode
- Writes the measured batch volume, batch accumulation time, average batching volumetric flowrate, batching start and stop date and time values to the batching log.

Batching does not affect measuring and logging of current values.

3.3. Viewing logs and historical data

3.3.1. To view log records, select the log type **Data logs / View data logs / DATA LOGS CHANNEL X / Hourly log** (**Daily log**, **Monthly log**, **Interval log, Batch log**). Then select the required log interval using buttons ←, → and view logged values pressing buttons ↑, ↓.

The last line of hourly, daily, monthly and interval logs contains the **Record search** option. Upon selecting this option window **LOG RECORD SEARCH**, opens, and the cursor moves to the line displaying the log interval.

To find a record, activate the line and enter the required log interval. In case the entered interval is present in the log you will move to this (or the nearest) interval by pressing button ↵. If it is not present, the last line will display the message: **No search conducted.**

3.3.2. To view log records, select the log type **Status logs / Error logs** (**Failure log, Mode log**). The procedure to view log records is the same as for records in archives.

The last line in each log contains words **Curr. record.** Activate this line, enter the required record number and press button ↵ to navigate to this record quickly. In case the record with this number does not exist, the display will show the last record.

4. TROUBLESHOOTING

4.1. To check the flowmeter functionality most fully make sure that measured values are displayed and that all setting parameters are entered and set within the required range.

4.2. In self-test mode, the flowmeter has the automatic monitoring functionality which displays flowmeter status words which register alarm situations, failures and faults.

Current state of the flowmeter measuring channels is displayed in windows **STATUS LOGS / Current status / CURR. STATUS chan. 1**(**2,3,4**) as the following status words:

- **ER** – alarm situation measuring channel status word
- **DS** – output status word
- **FL** – failure status word.

Also, the ER status word is displayed in windows of zoomed indication of measured parameters current values.

Status word is displayed as a sign-position code – a combination of characters " - " и " x ". Character " - " shows that an event did not occur, character " x " – that it did.

Status word contents, possible causes of some faults and ER situations, and troubleshooting methods are described in Appendix D.

To determine the type of the ER situation that occurred in a measuring channel and is displayed in the measured value zoomed indication window, open window **STATUS LOGS / Current status** (**CURR. STATUS chan. X**) / **ER** (**ER chan. X**) of the corresponding channel. Besides the ER situation type name, this window shows the ER situation start time and duration.

4.3. An ER situation is an event characterized by mismatch of measured values and flowmeter metrological characteristics, or by impossibility of measurements due to the violation of measurement conditions. An ER situation is registered when its duration exceeds 1 second.

Secondary measuring converter processes ER situations as follows: when the ER situation occurrence condition is met character " × " shows in the certain place of the status word (error message), and upon completion the ER situation start time, end time and duration is recorded to the archive. The **Inert. time** ER situation (alarm condition) is not recorded to archives.

The flowmeter power supply failure is also recorded to an archive.

Depending on the ER type the CS can stop flowrate measuring, volume accumulating and recording dead time values. The CS starts recording dead time value when volume accumulation is stopped.

4.4. Ultrasonic signal (USS) failure is processed depending on the ratio of USS failure duration and the preset setting value **Inert. time** in menu **SETTINGS / Processing settings**, which can be set between 5 and 300 s.

Upon USS failure in the measuring channel, ER **Inert. time** is recorded to the status word, accumulation of liquid volume stops and the last measured flowrate value continues to display.

In case signal failure duration is less than the preset lag, ER situation **Inert. time** is cancelled and, after the USS signal appears again, the average flowrate value for the USS failure period is calculated. Average flowrate value calculation uses the last value measured before USS failure, and the first value measured after the USS appeared again. Calculated average value is used to calculate increment of volume during the USS failure. The calculated volume increment is added to the volume value (batch) accumulated by the time of USS failure. After that, flowrate measuring and volume (batch) accumulating continues.

In case USS failure duration exceeds the lag time, ER situation **Inert. time** is cancelled, ER **No signal** is recorded, volume accumulating stops, zero flowrate value is displayed the dead time counter starts counting. When USS appears back the flowmeter resumes flowrate measuring and accumulating volume (batch) starting from the volume (batch) value, accumulated by the time of USS failure. USS failure is recorded to the ER log, and the dead time value is increased by the USS failure duration value.

4.5. In case the flowrate value exceeds the preset upper limit value or is less then the lower limit value, the ER with the same name is registered, and accumulating of volume and flowrate measuring continue.

If the flowrate value has exceeded the value corresponding to flow velocity **Vmax** set in menu **SETTINGS / Processing settings**, then ER **Q>Qmax** is registered, volume accumulating and logging stops while measuring and displaying of the measured flowrate value continues.

4.6. In case of failure or an ER first of all check the following:

- power supply is fully operational, the flowmeter input voltage meets the specifications;
- Power circuits are reliably connected
- Liquid is present and running through the pipeline
- There is no gas (air) bag in the place of PEA installation.

If all the requirements listed above are met contact the service centre (regional dealer) or manufacturer for the information about the device's operability.

4.7. **"IOTAFLOW UF"** Flowmeter should be repaired by authorized dealers or by the manufacturer.

APPENDIX A. Display System

Menu and window system and relationships between them are shown in Figs.A.1-A.8. Notation used in these figures is shown in table A.1.

List of settings, number of displayed digits and possible values of displayed values can be found in Appendix B.

Table A.1.

Element type	Application
SETTINGS	Menu name
Flow rate	Menu item, command or setting name.
X, XXX	Uneditable numeric value of a setting, or editing is performed in another window.
,□□□	Setting numeric setting value editable digit-by-digit.
condition	Settings value is set by the flowmeter. Displayed words represent the setting essence meaning.
< command >	Setting value is set by user by selecting it from the list. Words within angle brackets represent the essence meaning or possible values of a setting.
(S)	Window or menu item (setting) is displayed only in the SETUP mode.
(SS)	Window or menu item (setting) are displayed in modes SERVICE and SETUP.
Icon ○ representing the mode is missing	Window or menu item (setting) is displayed in all modes: OPERATION, SERVICE, SETUP.
[S]	Setting (settings) modification or transition to the lower level window is possible only in SETUP mode.
[SS]	Setting (settings) modification or transition to the lower level window is possible only in SERVICE and SETUP modes.
Icon □ representing the mode is missing	Setting (settings) modification is possible in all modes: OPERATION, SERVICE, SETUP.
[*IE*]	Window of the integrated indication and input of value of parameter.
[*I*]	Window of the integrated indication.
←→	Transition between windows.
⇨ *Fig. A.1*	Indicator of the transition to another figure.

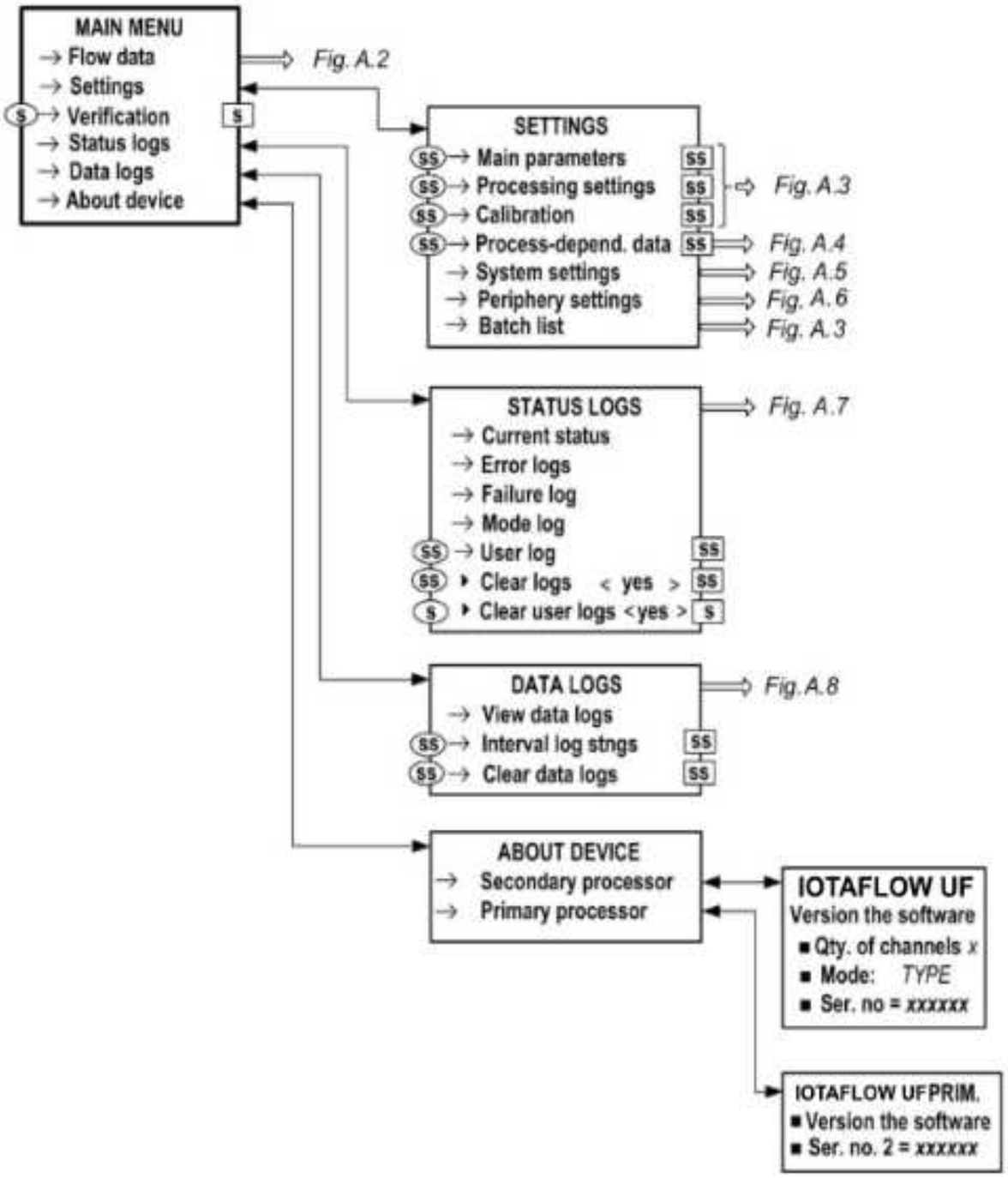

Fig.A.1. Main menu

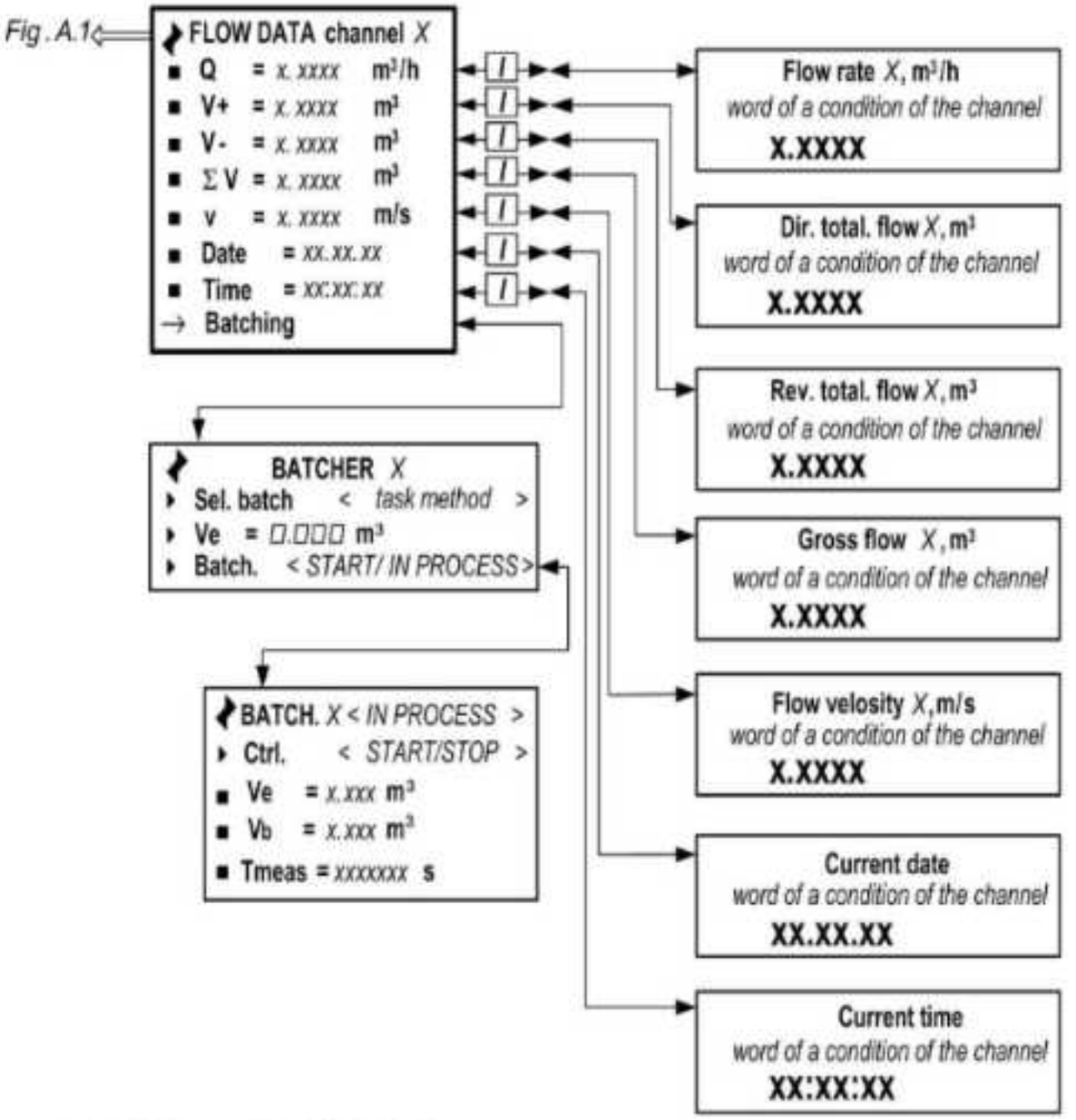

Fig.A.2. Menu "FLOW DATA"

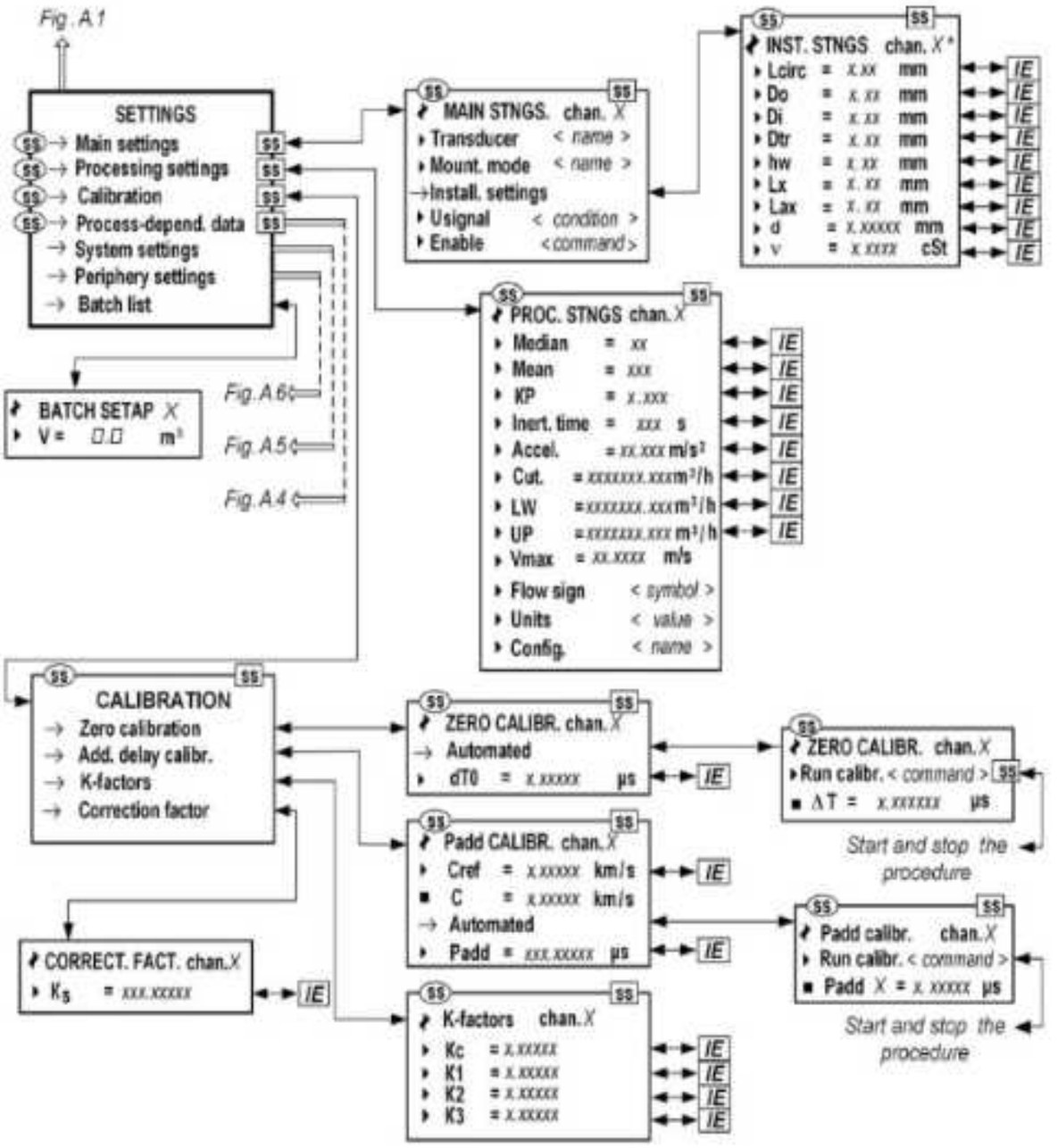

* - the set of parameters is determined by the hookup scheme PEA in **MAIN STNGS. chan. *X*** menu (see table.B.3)

Fig.A.3. Menus and windows for indicating characteristics of the pipeline section, adjusting signals, and processing measurement and calibration results

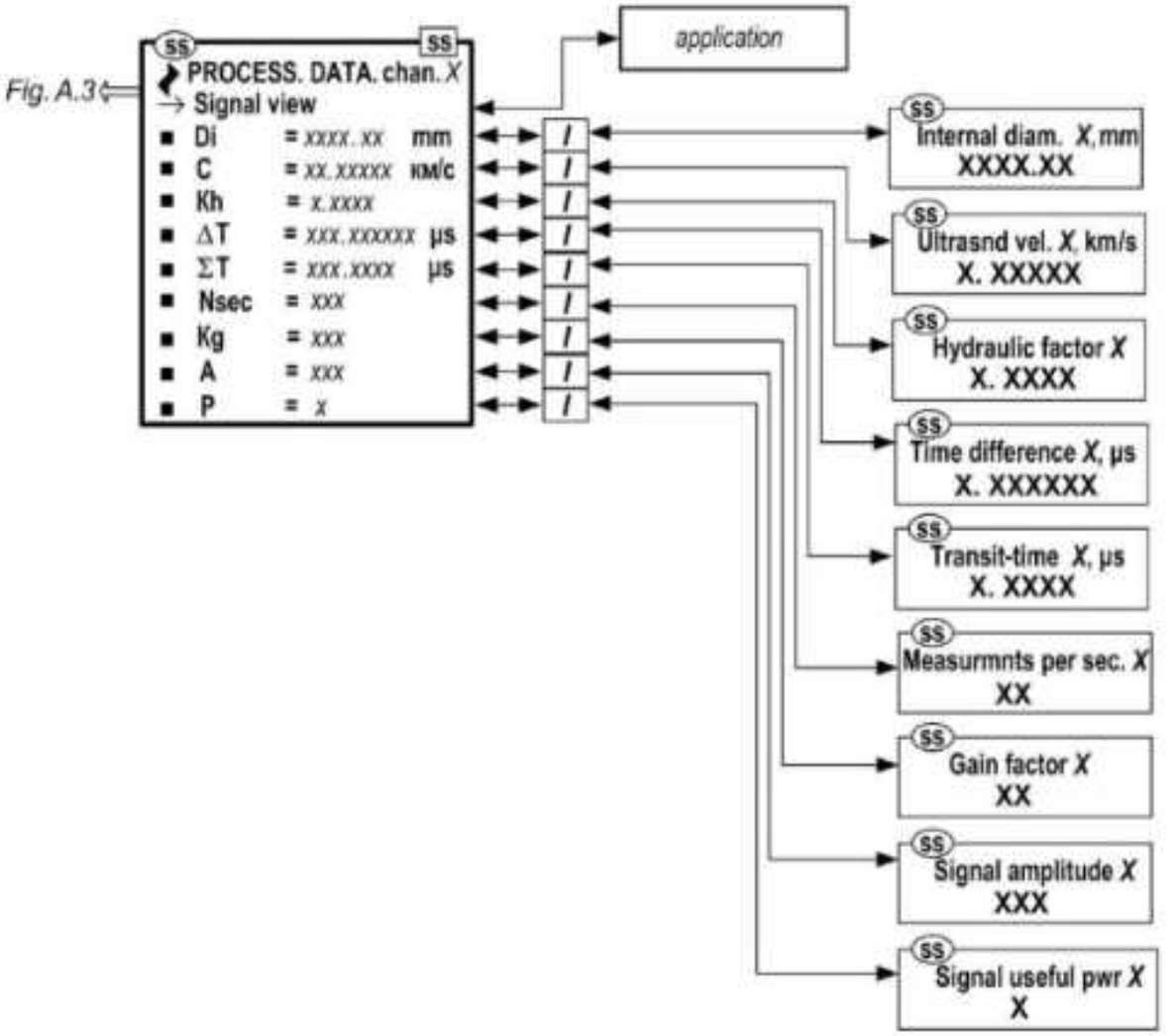

Fig.A.4. Menu "Process-depend. data"

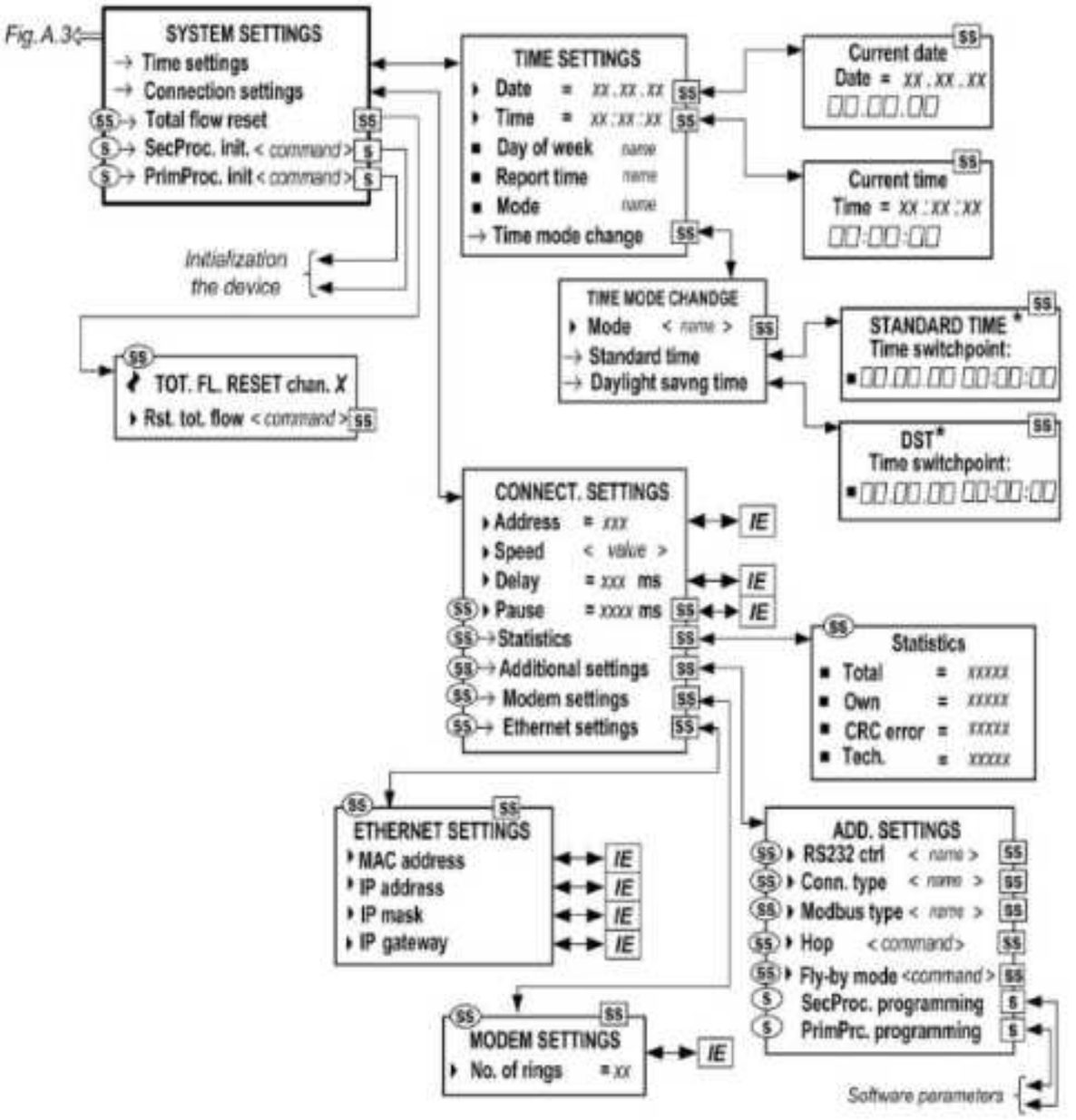

* - not displayed in case **Mode** setting is assigned **no change** value.

Fig.A.5. Menu "SYSTEM SETTINGS"

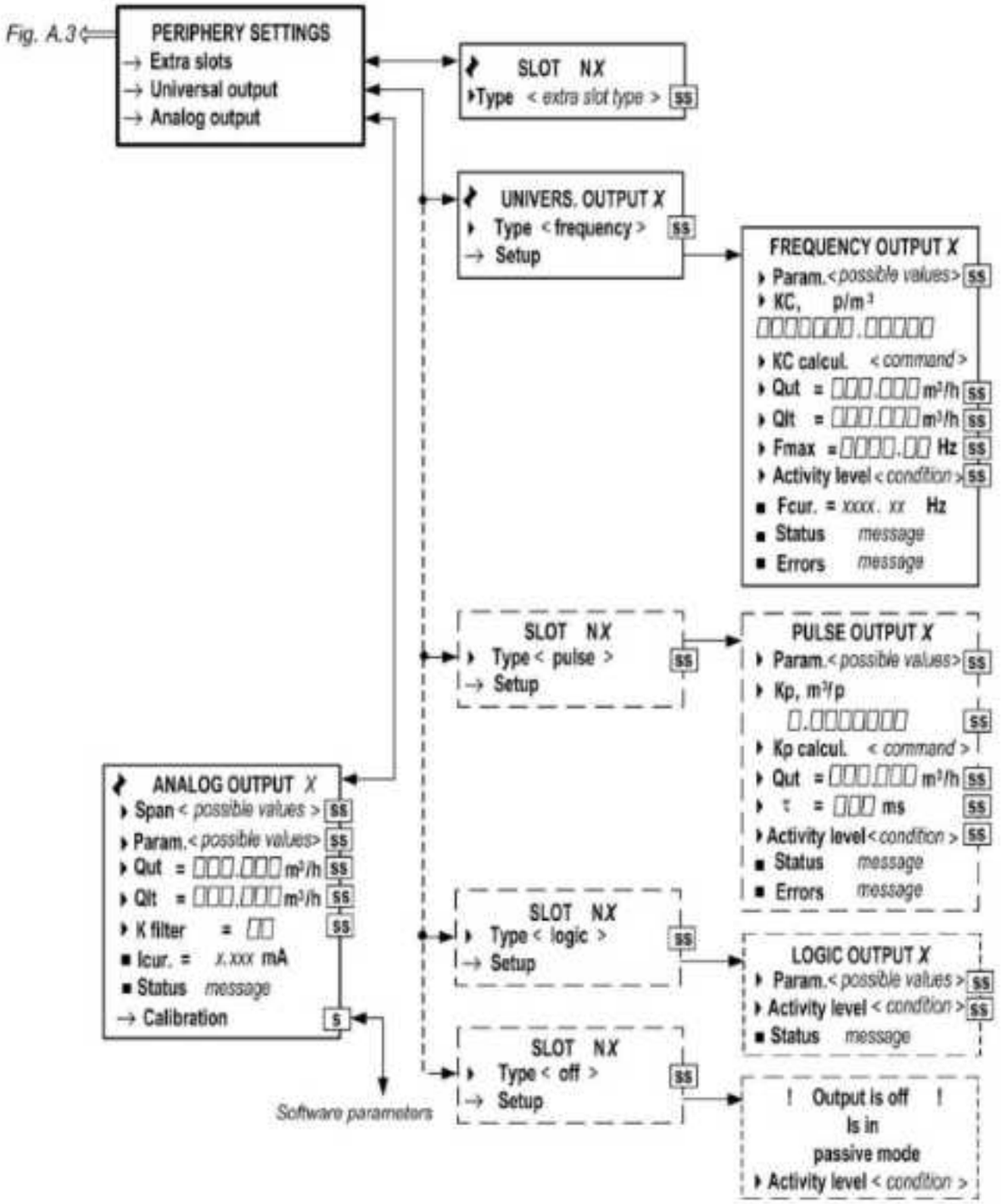

Fig.A.6. Menu "PERIPHERY SETTINGS"

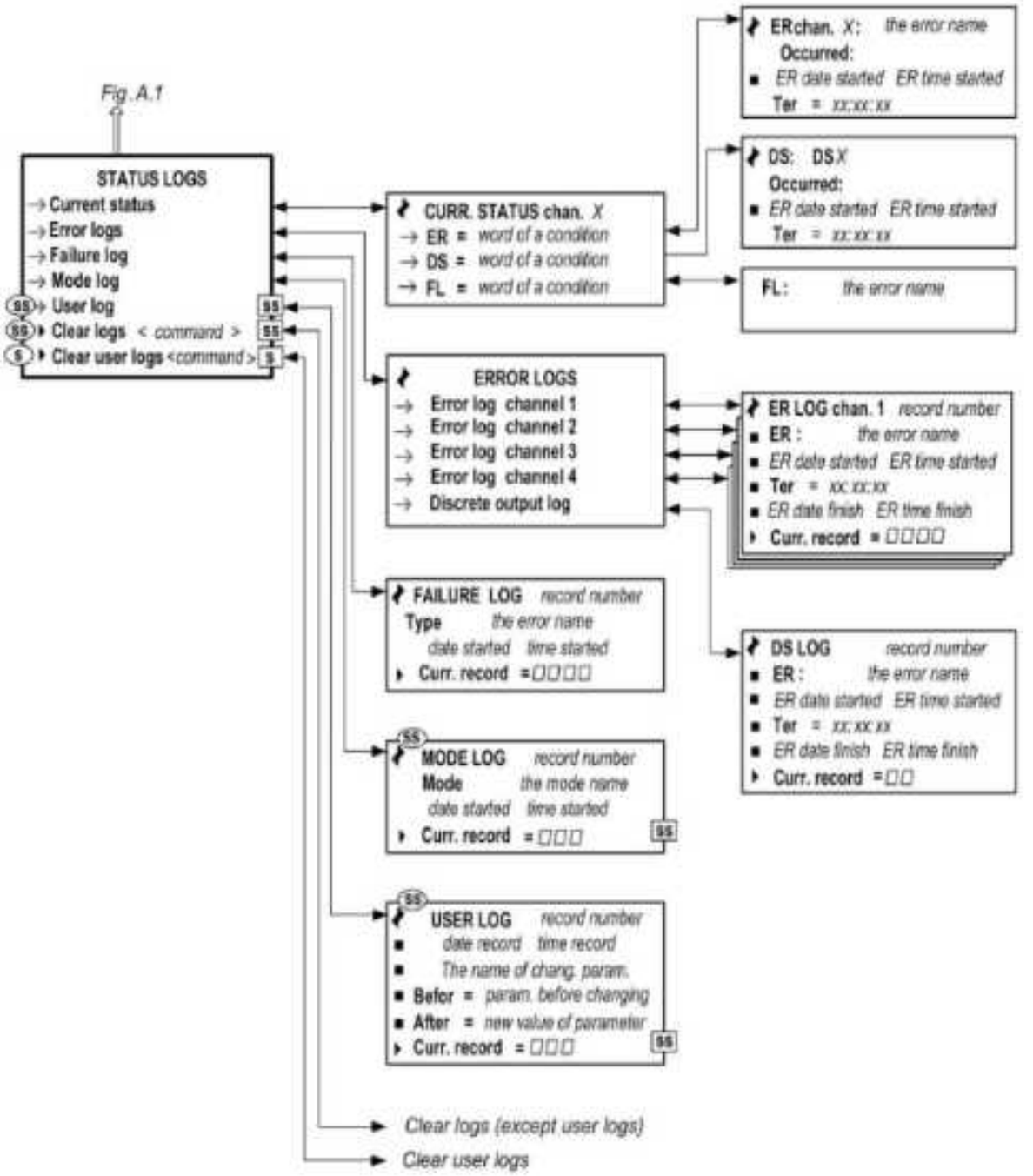

Fig.A.7. Menu "STATUS LOGS"

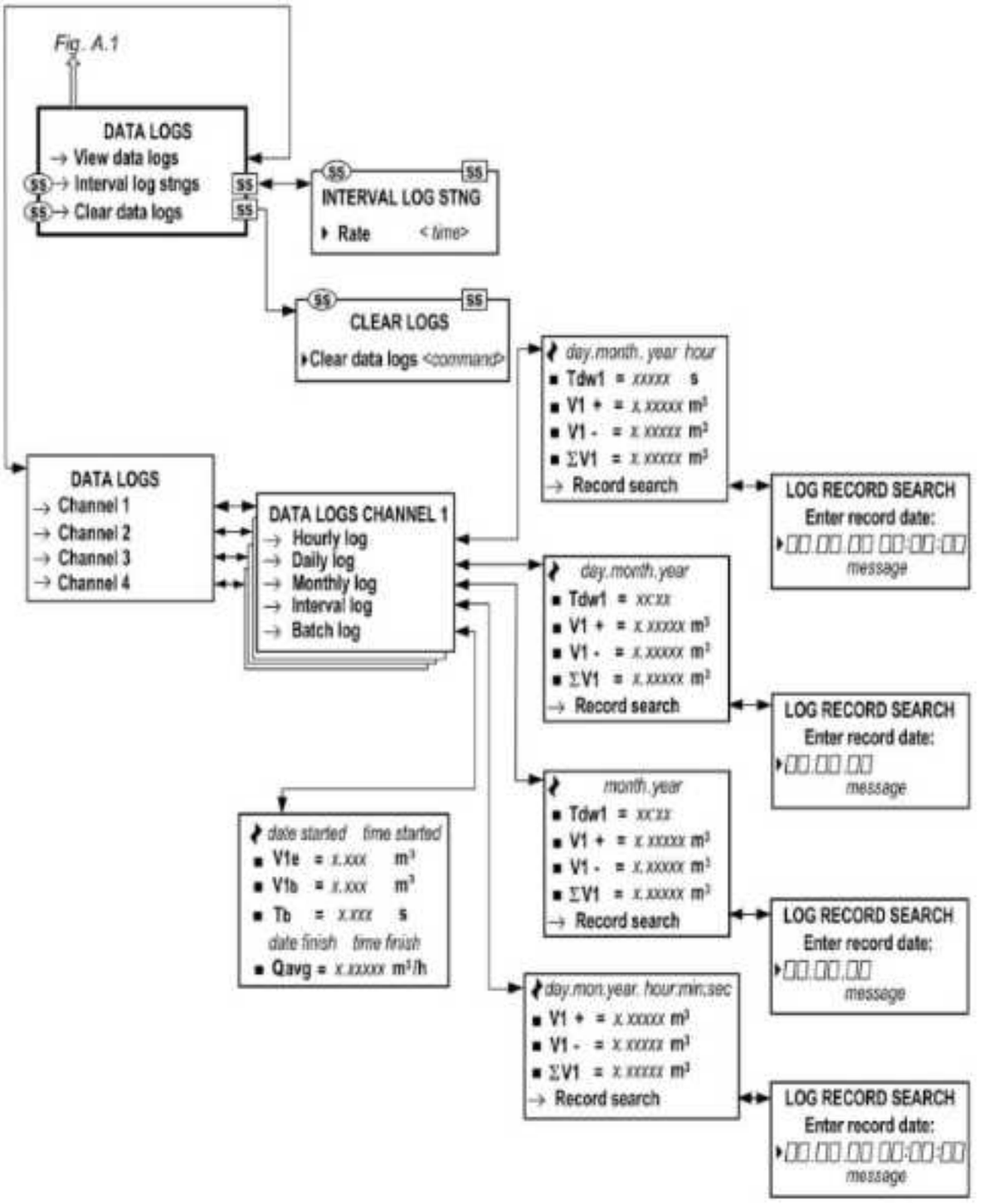

Fig.A.8. Menu "DATA LOGS"

APPENDIX B. Displayed Parameters

Table B.1. Menu "FLOW DATA" (Fig.A.2)

Representation of the parameter being displayed	Parameter Name, measurement units	Number of displayed digits, representation form		Notes
		integer part	fractional part	
FLOW DATA				
Q	Average volumetric flowrate, m^3/h (m^3/s, l/min)	7	4	
V+	Volume for direct flow, m^3 (l)	10	4	
V-	Volume for reverse flow, m^3 (l)	10	4	
ΣV	Total volume considering the flow direction, m^3 (l)	10	4	
v	Flow velocity, m/s	3	4	
Date	Current date (flowmeter time)	**XX.XX.XX** (dd.mm.yy)		
Time	Current time (flowmeter time)	**XX:XX:XX** (hh:mm:ss)		

Table B.2.

Representation of the parameter being displayed	Parameter Name, measurement units	Allowed values	Value after initialization	Notes
BATCHER				
Sel. batch	Batch setting method: setting of value or selecting a preset value	**ENTERED; BATCH1 (2,...,8)**	**ENTERED**	
Ve	Preset batch value, m^3 (l)	**0.000-100000000**	**0**	
Batch.	Command to start or the process status	**START; IN PROCESS**	**START**	
Ctrl.	Command to start or the process status	**START; STOP**	**START**	
Vb	Measured batch value, m^3 (l)	**0,000-9999999.999**	**0**	
Tmeas	Batch accumulation time, s	**0-4294967**	**0**	

Table B.3. Main parameters, additional parameters of result processing and calibration (Fig.A.3)

Representation of the parameter being displayed	Parameter Name, measurement units	Allowed values	Value after initialization	Notes
1	2	3	4	5
		MAIN STNGS.		
Transducer	PEA type	**Wetted**	does not change	
Mount. mode	PEA installation chart	**Diameter; Chords; U-elbow;**	does not change	
		Z-mode	does not change	
Install. settings	Transition to window **INST. STNGS**	-	-	
U signal	Probing signal voltage	**high; low**	does not change	
Enable	Enables measurements	**no; yes**	does not change	
f3	Signal digitization frequency	**20 MHz, 10MHz, 6,67 MHz, 5 MHz**	**20 MHz**	
		INST. STNGS		
Lcirc	Average circumference value for the outer diameter of the pipeline, mm	**31.4-50000**	does not change	Notes 1, 2
Do	Average outer pipeline diameter value, mm	**10-16000**	does not change	Notes 1, 2
Di	Inner diameter of the pipeline, mm	**10-16000**	does not change	Note 3
Dtr	Average outer pipeline diameter value in the longitudinal plane of PEA installation, mm	**10-16000**	does not change	Note 1
hw	Average value of pipeline wall thickness, mm	**0.01-99.99**	1	Notes 1, 2
L	Distance between radiating planes of a PEA pair, mm	**10.00-16000**	does not change	Note 5
Lx	Distance between centres of radiating planes of PEA along the pipeline axis, mm	**10.00-16000**	does not change	Notes 1, 2
Lax	Distance between the flow feed points into the straight section of the U-elbow, mm	**10.00-2000**	does not change	Note 3
d	Inner surface equivalent asperity, mm	**0,00001-9,9999**	**0.01**	Note 1
ν	Kinematic viscosity of liquid, cSt	**0,0001-5000**	1	Note 4

NOTES: Displayed when in menu **MAIN STNGS. / Mount. mode** one the following values is set:

1. "**Diameter**".
2. "**Chords**".
3. "**U-elbow**".
4. "**Diameter**" or "**U-elbow**".
5. When any value is set

Cont. of Table B.3.

1	2	3	4	5
		PROC. STNGS		
Median	Number of measurements to determine the median value	**1-15**	**7**	
Mean	Number of measurements to determine the arithmetic mean value	**1-200**	**200**	
KP	Exponential filter factor	**0-1**	**0.95**	
Inert. time	Minimal duration of the event recorded to logs, s	**5-300**	**10**	
Accel.	Maximum speed of variation of flow velocity in the pipeline, m/s^2	**0.001-10**	**10**	
Cut.	Cutoff by the minimal flowrate, m^3/h (m^3/s, l/min)	**0-9999999**	**0**	
LW	Low setpoint for flowrate, m^3/h (l/min)	**0-9999999**	**0**	
UP	High setpoint for flowrate, m^3/h (l/min)	**0-9999999**	**5**	
Vmax	Correction of the flow velocity, m/s	**0-99.9999**	**10.6000**	
Flow sign	Liquid flow direction sign	**– ; +**	**+**	
Units	Flowrate (volume) measurement units	**m^3/h (m^3); l/min (l); m^3/s (m^3)**	**m^3/h (m^3)**	
Config.	Flowmeter configuration	**Multichan. Multipath.**	**Multichan.**	
		CALIBRATION		
dT0	Zero offset, μs	**–999,999- -999.999**	**0**	
Cref	Reference ultrasound velocity, km/s	**0.00001-5.99999**	**1.48270**	
C	Measured ultrasound velocity, km/s	**0.00001-5.99999**	**-**	
Padd	Additional lag in the USS channel, μs	**–999.999- 999.999**	does not change	
Kc	Calibration factor	**0-100**	**1**	
K1,2,3	Calibration factors	**0-100**	**1**	
Ks	Calibration factor	**0-100**	**1**	
		BATCH SETUP		
V	Preset batch value, m^3(l)	**0.001-999999**	**0**	

Table B.4. Menu "SYSTEM SETTINGS" (Fig.A.5)

Representation of the parameter being displayed	Name, measurement units of the parameter	Allowed values, representation form	Value after initialization	Notes
1	2	3	4	5
TIME SETTINGS				
Date	Current flowmeter date	**XX.XX.XX** (dd.mm.yy)	does not change	
Time	Current flowmeter time	**XX:XX:XX** (hh:mm:ss)	does not change	
Day of week	Current flowmeter week day	**Mo, Tu, We, Th, Fr, Sa, Su**	does not change	
Report time	Flowmeter time type	**std., DST**	does not change	
Mode	Flowmeter clock transition mode to "Daylight Saving" and "Standard" time	**standard, user-defined, no change**	does not change	
Time mode change	Flowmeter clock transition mode to "Daylight Saving" and "Standard" time	**XX.XX.XX XX:XX:XX**	does not change	
CONNECT. SETTINGS				
Address	Flowmeter address in the RS-interface network	**1-232**	**1**	
Speed	Transfer rate, Baud	**1200; 2400; 4800; 9600; 19200**	**19200**	
Delay	Lag for response via interface, ms	**0-125**	**50**	
Pause	Idle time between sending bytes, ms	**1-1000**	**5**	
Statistics				
Total	Total amount of requests to all devices in the network	**0-65535**	**0**	
Own	Number of requests to this flowmeter	**0-65535**	**0**	
CRC error	Number of errors during data exchange	**0-65535**	**0**	
Tech.	Number of requests to the primary transducer	**0-65535**	**0**	
ADD. SETTINGS				
RS232 ctrl	Mode	**no; bidir.; unidir.**	**unidir.**	
Conn. type	RS-232 cable diagram	**direct; modem**	**direct**	
ModBus type	**ModBus** Protocol Type	**RTU; ASCII**	**RTU**	
MODEM SETTINGS				
No. of rings	Number of calls to establish a modem connection	**31**	**NO MODEM**	
ETHERNET SETTINGS				
MAC address	MAC address	**00-00-000 (99-99-999)**	**00-00-000**	
IP address	IP address	**000-999**	**000**	
IP mask	IP mask	**000-999**	**000**	
IP gateway	Gateway IP address	**000-999**	**000**	

Table B.5. Menu "PERIPHERY SETTINGS"(Fig.A.6)

Representation of the parameter being displayed	Parameter Name, measurement units	Allowed values	Value after initialization	Notes
1	2	3	4	5
SLOT NX				
Type	Type of the module installed in the slot	**Discrete** **Analog** **Universal o/p** **Empty**	**Empty**	
UNIVERS. OUTPUT *X*				
Type	Universal output operation mode	**off** **logic** **pulse** **frequency** **missing**	**missing** or **off**	
FREQUENCY OUTPUT (Setup)				
Param.	Output function (parameter identifier)	see Table B.6	**no**	
KC	Output conversion factor, pulse/m^3 (pulse/l)	**0.0001-5·10^6**	**1000.0**	
Qut	Upper limit by flowrate for the universal output in the frequency mode, m^3/h (l/min, m^3/s)	**0-999999.93**	**300**	
Qlt	Lower limit by flowrate for the universal output in the frequency mode, m^3/h (l/min, m^3/s)	**0-999999.93**	**0**	
Fmax	Maximum output frequency, Hz	**0-3000**	**3000**	
Active level	Output voltage level when the signal is present (logical 1)	**low;** **high**	**low**	
Fcur.	Current frequency value	**0-3000**	-	
Status	Output status	**intact;** **faulty**	**intact**	
Errors	Output operation characteristic	**no errors;** **F > Fmax;** **sett.viol.** **yes**	**no errors**	
PULSE OUTPUT (Setup)				
Param.	Output function (parameter identifier)	see Table B.6	**no**	
Kp	Pulse weight, m^3/pulse (l/pulse)	**0.0000002-10^6**	**0.001**	
Qut	Upper limit by flowrate for the universal output in the pulse mode, m^3/h (l/min, m^3/s)	**0-999999.93**	**300**	
τ	Pulse width, ms	**1-500**	**1**	

Cont. of Table B.5

1	2	3	4	5
Active level	Output voltage level when the signal is present (logical 1)	**low; high**	**low**	
Status	Output status	**intact; faulty**	**intact**	
Errors	Output operation characteristic	**no errors; pulse>norm**	**no errors**	
	LOGIC OUTPUT			
Param.	Output function (parameter identifier)	see Table B.6		
Active level	Output voltage level when the signal is present (logical 1)	**low; high**	**low**	
Errors	Output status	**intact; faulty**	**intact**	
	ANALOG OUTPUT			
Span	Output operation range, mA	**0-5; 0-20; 4-20**	**4-20**	
Param.	Output function (parameter identifier)	see Table B.6		
Qut	High setpoint by flowrate for current output, m^3/h (l/min)	**0-999999.93**	**300**	
Qlt	Low limit by flowrate for current output, m^3/h (l/min)	**0-999999.93**	**0**	
Icur	Current value of current, mA	**0.001-20.0**	**-**	
Kfilter	Filtration factor	**0-40**	**1**	
Status	Output operation characteristic	**no errors value > UT value < LT**	**no errors**	

Table B.6. Allowed functions for pulse, frequency, logical and current outputs

Name of the parameter	Identification in line **Param.**	Possibility to set the function for the output			
			Universal output		
		current	frequency	pulse	logical
1	2	3	4	5	6
Output closed	**no**	×	×	×	×
Flowrate for direct flow	**Qx+**	×	×		
Flowrate for reverse flow	**Qx-**	×	×		
Flowrate for any flow direction	**|Qx|**	×	×		
Volume for direct flow	**Vx+**			×	
Volume for reverse flow	**Vx-**			×	

Cont. of Table B.6

1	2	3	4	5	6
Volume for any flow direction	**Vx**			×	
Signal upon batching completion	**pul. batcher *x***			×	
Reversing flow direction	**sign *x***				×
No ultrasonic signal	**no signal *x***				×
Flowrate exceeds the high set-point	**Q > Qup*x***				×
Flowrate is less than the low setpoint	**Q < Qlw *x***				×
Flowrate exceeds the upper limit	**Q > Qut**				×
Flowrate is less than the lower limit	**Q < Qlt**				×
Flowrate exceeds the maximum flowrate value	**Q > Qmax**				×
Active level signal is generated on the output when batching is completed	**batcher *x***				×

Table B.7. Menu "STATUS LOGS" (Fig.A.7)

Representation of the parameter being displayed	Parameter Name, measurement units	Value range, representation form	Value after initialization	Notes
		ERROR LOGS		
Ter	Event duration	**XX:XX:XX** (hh:mm:ss)	**0**	
-	Data of event start or end	**XX.XX.XX** (dd.mm.yy)	-	
-	Time of event start or end	**XX:XX:XX** (hh:mm:ss)	-	
Curr. record	Sequential number of the record to be searched for after entering the new value	**1-1000***	does not change	
		CURR. STATUS chan. *X*		
ER	Measuring channel status word	15 character places** (see Table D.1)	-	
DS	Status word of quantized outputs	13 character places** (see Table D.3)	-	
FL	Status word of failures	4 character places** (see Table D.4)	-	

* - Maximum number of records depends on the type of log

** - Character "×" means that event occurred, character "-" that it didn't; positions in status words are enumerated **from right to left**

Table B.8. Menu "DATA LOGS" (Fig.A.8)

Representation of the parameter being displayed	Parameter Name, measurement units	Value range, representation form	Value after initialization	Notes
DATA LOGS (Hourly, daily, monthly, interval logs)				
Tdwx	Dead time: - hourly log, s	**0-3596**	-	
	- daily log	**XX:XX** (hh:mm)	-	
	- monthly log	**XXX:XX** (hh:mm)	-	
Vx +	Volume for direct flow, m^3 (l)	**0-999999000**	-	
Vx -	Volume for reverse flow, m^3 (l)	**0-999999000**	-	
ΣVx	Total volume considering floe direction, m^3 (l)	**0-999999000**	-	
DATA LOG (Batch log)				
Vx e	Preset batch value, m^3(l)	**0-1000000**	**0**	
Vx b	Measured batch value, m^3 (l)	**0-9999990**	**0**	
Tb	Batching time, s	**0-65535**	-	
Qavg	Average flowrate per batching time			
INTERVAL LOG SETTING				
Rate	Interval log range (logging range), mm:ss	**5 seconds – 2 hours**	**6:00**	

APPENDIX C. Functions and Identification of Keyboard Keys (Buttons)

Table C.1.

Identification	Function
↑	1. When selecting menu item, parameter, log record, value from the list – navigating up the list. 2. When setting a numeric value – incrementing digit value by one.
↓	1. When selecting menu item, parameter, log record, value from the list – navigating down the list. 2. When setting a numeric value – decrementing digit value by one.
←	1. When digit-by-digit setting of numeric values – moving the cursor along the number digits to the left. 2. When viewing log records – decrementing record number. 3. When searching similar menus (windows) – transition to the menu (window) with less sequential number or to the previous log interval. 4. When selecting menu item, parameter, log record, value from the list – navigating up the list.
→	1. When digit-by-digit setting of numeric values – moving the cursor along the number digits to the right. 2. When viewing log records – incrementing the record number. 3. When searching similar menus (windows) – transition to the menu (window) with greater sequential number or to the next log interval. 4. When selecting menu item, parameter, log record, value from the list – navigating down the list.
↙	1. Transition to the selected menu (window) of lower level. 2. Activization of a menu item (parameter): allowing access to changing a parameter (setting) value, command or to execute an action. 3. Executing an operation, entering set parameter value, command.
↖	1. Exit to the menu (window) of higher level. 2. Exiting active state: forbidding access to changing a parameter (setting) value, command or to execute an action. 3. Cancelling executing of an operation, entering modified parameter value, command; exiting to the menu (window) of higher level.
0 ... 9	1. Entering a numeric value of a setting parameter.
•	1. Moving the cursor to the fractional part of a number.
–	1. Sign of a negative numeric value of a parameter.

APPENDIX D. Status Words and Troubleshooting

When an event occurs the status word shows, in corresponding position, character "x", and when it doesn't occur – character " - ". Positions in status words are numbered **from right to left.**

Table D.1. ER status word (measuring channel status word)

Number of the position	Appearance of indication	ER Description
1	**F > Fmax**	Maximum frequency is exceeded
2	**Q > Qmax**	Maximum flowrate is exceeded
3	**Q > Qut**	Flowrate exceeds the current output upper limit
4	**Q < Qlt**	Flowrate is less than the current output upper limit
5	**No signal**	USS is not present in the current measuring channel (in the 1 beam)
6	**No signal2**	USS is not present in the 2 beam
7	**No signal3**	USS is not present in the 3 beam
8	**No signal4**	USS is not present in the 4 beam
9	**Oper.er.**	Operator's error in the current measuring channel (in the 1 beam)
10	**Oper.er.2**	Operator's error in the second beam
11	**Oper.er.3**	Operator's error in the 3 beam
12	**Oper.er.4**	Operator's error in the 4 beam
13	**Q > Qup**	Flowrate exceeds the high setpoint
14	**Q < Qlw**	Flowrate is less than the low setpoint
15	**Inert. time**	Lag time

Table D.2. Status word of quantized outputs (universal outputs)

Number of the position	Appearance of indication	Event description
1	**DS0**	ER or failure on the universal output 0
2	**DS1**	ER or failure on the universal output 1
3	**DS2**	ER or failure on the universal output 2
4	**DS3**	ER or failure on the universal output 3
5	**DS4**	ER or failure on the universal output 4
6	**DS5**	ER or failure on the universal output 5
7	**DS6**	ER or failure on the universal output 6
8	**DS7**	ER or failure on the universal output 7
9	**DS8**	ER or failure on the universal output 8
10	**Q < Qlt1**	Flowrate is less than the current output 1 lower limit
11	**Q > Qut1**	Flowrate exceeds the current output 1 upper limit
12	**Q < Qlt2**	Flowrate is less than the current output 2 lower limit
13	**Q > Qut2**	Flowrate exceeds the current output 2 upper limit

NOTE.

The following events are registered in the status word of quantized (universal) outputs:

- Frequency corresponding to the current flowrate exceeds the maximum allowed value (in the frequency operation mode)
- Pulse number corresponding to the measured volume value exceeds that which, considering the preset pulse width, can be generated on the output within the interval equal to that of volume measurement (in the pulse operation mode)
- Flowrate value is beyond the set lower or upper limit (in the frequency mode)
- Output failure.

Table D.3. Status word of failures

Number of the position	Appearance of indication	Event description
1	**Conn. fail.**	Failure of connection with the transducer
2	**Clock fail.**	The flowmeter clock failure
3	**FRAM fail.**	External RAM failure
4	**FLASH fail**	Nonvolatile memory failure

Table D.4. Faults, failures, alarm situations and troubleshooting

Event type	Probable cause	Troubleshooting method
1. Display failure	1. Faulty power supply 2. Faulty prevented.	1. Replace power supply. 2. Replace prevented.
2. **No signal**	1. Incorrect adjustment of the flowmeter. 2. Pipeline is not filled with liquid, or there's too much gas in the liquid. 3. Faulty electric connections between PEA and CS. 4. Sediments on the inner surface of the pipeline. 5. Faulty PEA. 6. CS failure.	1. Make sure that the parameters are set correctly. 2. Make sure that the pipeline is filled with liquid, and that there're not considerable air bags present. 3. Check integrity and reliability of electric connections between PEA and CS. 4. Install PEA on another section if the signal level is insufficient. 5. Check functionality of the channel with other PEAs. 6. Contact the Service Center.
3. **Q > Qmax**	Measured flowrate value has exceeded the allowed value.	Make sure that the parameters are set correctly.
4. **Q > Qut**	Flowrate exceeds the frequency output upper limit	Make sure that the parameters are set correctly.
5. **Q < Qlt**	Flowrate is less than the frequency output upper limit	Make sure that the parameters are set correctly.
6. **Q < Qlt1**; **Q < Qlt2**	Flowrate is less than the current output lower limit	Make sure that the parameters are set correctly.
7. **Q > Qut1**; **Q > Qlt2**	Flowrate exceeds the current output upper limit	Make sure that the parameters are set correctly.
8. **F > Fmax**	Frequency corresponding to the current flowrate exceeds the maximum allowed value.	Make sure that the parameters are set correctly.
9. **Q > Qut**	Flowrate exceeds the high setpoint	Make sure that the parameters are set correctly.
10. **Q < Qlw**	Flowrate is less than the low setpoint	Make sure that the parameters are set correctly.
11. **Oper.er.**	Wrong PS parameter values	Check correctness of set PS parameters
12. **Conn.fail.**	Transducer failure.	1. Perform initialization of the product*. 2. Contact the Service Center.
13. **Clock fail.**	The flowmeter clock failure.	1. Perform initialization of the product*. 2. Contact the Service Center.
14. **FRAM fail.**	External RAM failure.	Contact the Service Center.
15. **FLASH fail**	Nonvolatile memory failure.	Contact the Service Center.

* - During flowmeter's initialization the logs are cleared.

IOTAFLOW
SYSTEMS PVT. LTD

WITH CUT - IN CONVERTERS

VERSION UF - 5xx d
OPERATION MANUAL PART II

Contact Us:-

IOTAFLOW SYSTEMS PVT. LTD.

A-2/13, Mayapuri Industrial Area
Phase-II, New Delhi - 110064
Phones: +91-11-4625 4601-06
Call: +919910693866
email: contact@iotaflow.com

Specifications subject to change without prior notice. © Iotaflow Systems Pvt. Ltd.

" If You Want To Manage It, Measure It "

www.iotaflow.com