PORTAFLOW PF333/PF222

IOTAFLOW
SYSTEMS PVT. LTD

THE NEW PORTABLE RANGE OF CLAMP-ON FLOW AND ENERGY METERS FROM MICRONICS, FOR SIMPLE, ACCURATE FLOW AND ENERGY MEASUREMENT FROM OUTSIDE THE PIPE!

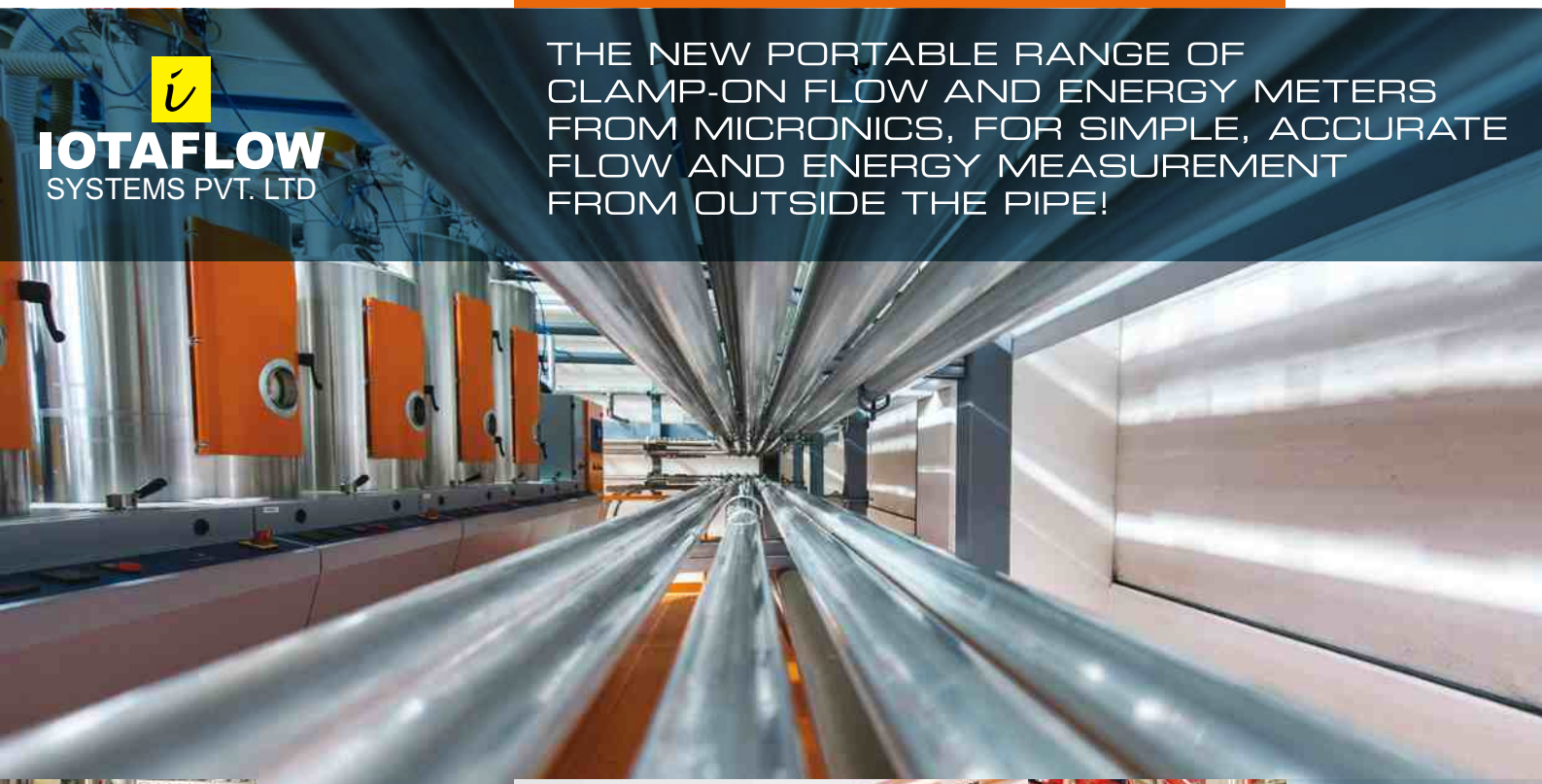

NEW!
Integral Heat & Energy Meter functions now available with the PF333 for hot and chilled water applications!

MADE IN BRITAIN

The Portaflow range brings simplicity to the non-invasive measurement of liquid flow and hydronic energy. Portaflow offers the user quick and accurate flow and energy measurement with its easy to follow menu and simple set up. Results can be achieved within minutes of opening the case!

Compact, rugged and reliable, the Portaflow range has been designed to provide sustained performance in industrial environments.

- Ultrasonic, cross-correlation flow measurement
- Reynolds number correction
- Easy to install
- Simple to follow set-up menu
- Clamp-on flow and temperature sensors (IP54 with IP68 option)

micronics
Through measurement comes control

PORTAFLOW PF333

Industries:

- Water
- Building Services
- Energy Management
- Power Generation
- Chemical
- Pharmaceutical
- Petrochemical
- Food

Recommended for:

- Potable water
- River water
- Cooling water
- Demineralised water
- Water/glycol solutions
- Hydraulic oil
- Diesel and fuel oils
- Chemicals
- Petroleum products

Application/use:

- HVAC and energy system audits
- Check system meters
- Pump verification
- Boiler testing
- Leak detection
- Filter sizing
- Ultrapure water measurement
- Heavy fuel oil metering
- Condensate measurement
- Balancing systems
- Clean in place evaluation
- Fire system testing
- Hydraulic system testing

PF333 – Portable Ultrasonic Liquid Flow/Heat Meter

SPECIFICATION

Temperature sensors with PF333 energy meter.
Improved data logger logs energy and flow all date stamped.
Measurement Technique: Ultrasonic, cross-correlation transit time method for flow measurement and PT100 Class B 4 wire for temperature measurement.
Heat Meter Standard: The Heat/Energy calculation is designed to comply with EN1434 section 6.
Temperature sensors: Clamp-on PT100 Class B 4 wire, range 0°C – 200°C (32°F – 392°F), resolution 0.1°C (0.18°F). Minimum delta T is 0.3°C IP54 with IP68 option.
Carry Case: The PF333 is supplied in a hard wearing IP67 carry case.
'A' Transducers: 13mm OD to 115mm OD pipes IP54 with IP68 option.
'B' Transducers: 50mm OD to 2000mm OD pipes IP54 with IP68 option.
Transducer Operating Temp: 'A'&'B' -20°C to +135°C. 'A'&'B' Optional Hi-Temp -20°C to +200°C.
Turn Down Ratio: 100:1.
Data Communications: USB, supports most USB 2.0 BOM drives.
3 x Pulse Output: Pulse or Frequency. Opto-isolated MOSFET relay.
Max Current: 150mA. Isolation: >100V AC/DC. Pulse for volume flow and alarms, frequency for flow rate. The pulse outputs can be configured including: flow totals, energy, loss of signal, low flow alarms.
4-20mA Output: 4-20mA flow proportional output, optically isolated 1500 volts, 620 ohms maximum load.
Volumetric mode: Pulse repetition rates: up to 50 pulses/sec (depending on pulse width).
Frequency mode: Max. pulse frequency: 200Hz
Flow at max frequency: User selectable
Data Logging: 100,000,000 data points. 12 named sites. Download via USB to CSV file and export to Excel. Logs application details, time, date, flow rate, forward total, reverse total, flow velocity, flow side temperature, return side temperature, temperature difference, power, total energy, signal quality, signal SNR, signal status.

How does it work?

The Portaflow 333/222 is a transit time ultrasonic flow meter designed to work with clamp-on transducers, to provide accurate measurement of liquid flowing within a closed pipe, without the need for any mechanical parts to be inserted through the pipe wall or to protrude into the flow system. It takes just a few minutes to install and there is no need to shut down flow or drain the system!

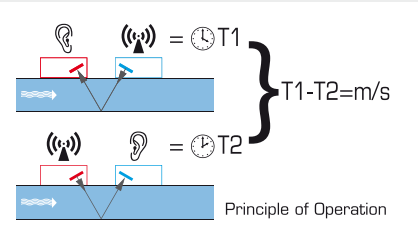

When ultrasound is transmitted between the transducers, its velocity is slightly increased when travelling in the direction of flow, and slightly reduced when travelling against the flow. The resulting transit time difference is directly proportional to the velocity of the flow in the pipe. Having measured the flow velocity and knowing the pipe cross-sectional area, the volumetric flow can be easily calculated.

Hydronic thermal energy, heat or cooling load is calculated from a combination of the flow rate and the flow and return temperature difference or delta T to comply with EN1434 section 6.

PF222 – Portable Ultrasonic Liquid Flow Meter

SPECIFICATION

Now available with both A and B sensors.

Carry Case: Polypropylene case, with foam insert and double wall for extra strength.

PF222A with 'A' Transducers: 13mm OD to 115mm OD pipes IP54 with IP68 option.

PF222B with 'B' Transducers: 50mm OD to 1000mm OD pipes IP54 with IP68 option.

Transducer Operating Temp: 'A'& 'B' -20°C to +135°C.

Turn Down Ratio: 100:1.

3 x Pulse Output: Pulse or Frequency. Opto-isolated MOSFET relay. Max Current: 150mA. Isolation: >100V AC/DC. Pulse for volume flow and alarms, frequency for flow rate. The pulse outputs can be configured including: flow totals, loss of signal, low flow alarms.

4-20mA Output: 4-20mA flow proportional output, optically isolated 1500 volts, 620 ohms maximum load.

Volumetric mode: Pulse repetition rates: up to 50 pulses/sec (depending on pulse width).

Frequency mode: Max. pulse frequency: 200Hz.

Flow at max frequency: User selectable.

PF333 and PF222 Product Features

- New cross correlation flow measurement system
- Flow Range – 0.1m/sec to 20m/sec bi-directional
- Sensor cables, blocks and temp sensors: IP54 with IP68 option.
- Display – 64 x 240 pixels graphic display
- Set-up via 16 key control panel
- Battery or mains operation
- Rechargeable NiMH battery
- Battery Life – 14 hours 2.5 hours charge time, depending on load
- Power – 110 – 240VAC +/-10% supply via PSU
- 4 user selectable languages including English, German, French and Spanish
- Accuracy Pipe ID > 75mm – ±0.5% to ±2% of flow reading for flow rate >0.2m/s
- Accuracy Pipe ID 13-75mm – ±3% of flow reading for flow rate >0.2m/s
- CE approved

Enclosure and guide rail dimensions:

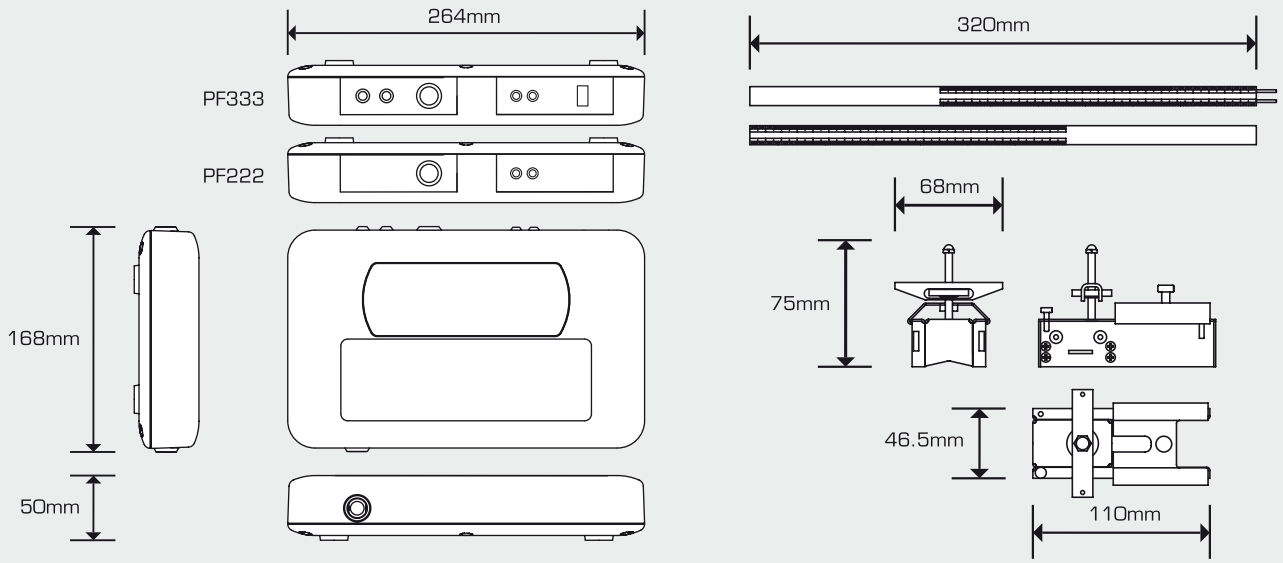

Hardware & Operation

The Portaflow electronics are housed in a specifically designed enclosure, which incorporates the graphic display, keypad, sensor and output facility connections. Set-up of the unit is carried out by selecting the options displayed in the main menu and by following the simple instructions in any of the user selectable languages.

The use of a rechargeable battery allows the unit to be operated for a period in excess of 14 hours depending on the facilities used. Continuous operation via the PSU is also possible while recharging the battery. Battery status, signal strength, time and date, as well as flow and energy information are all continuously displayed, keeping the user fully aware of the measurement process.

Hydronic Liquid Flow Energy Measurement

The PF333 is a portable, simple to use ultrasonic clamp-on flow and thermal, heat/energy meter, that uses ultrasound to measure flow rate and clamp-on PT100 temperature sensors to measure flow and return temperatures. The PF333 measures energy rate and totalised energy. And the Heat/Energy calculation is designed to comply with EN1434 section 6.

Flow Transducers

The Portaflow range is able to work with different transducer sets depending on the unit purchased and the application. Optional high temperature sensors are also available on the PF333. Sensor mounting clamps are provided with each instrument, to ensure correct mounting and reliable operation on any size pipe, in either diagonal or reflex modes.

Data Logger (PF333 only)

100,000,000 data points. 12 named sites. Download via USB to CSV file and export to Excel. Logs application details, time, date, flow rate, forward total, reverse total, flow velocity, flow side temperature, return side temperature, temperature difference, power, total energy, signal Quality, signal SNR, signal status.

Contact Us
IOTAFLOW SYSTEMS PVT. LTD.

A-2/13, Mayapuri Industrial Area Phase-II,
New Delhi - 110064 (INDIA)

+91-9910693866/ +91-7982674054

contact@iotaflow.com

Specifications subject to change without prior notice. © Iotaflow Systems Pvt. Ltd.