QUOTE LATEST ISSUE
DRG. No. C26 26 7691 B

Lucas-TVS LTD., PADI, CHENNAI, INDIA.

THIRD ANGLE PROJECTION | DO NOT SCALE | DIMENSIONS IN MM UNLESS OTHERWISE STATED

1st ISSUE

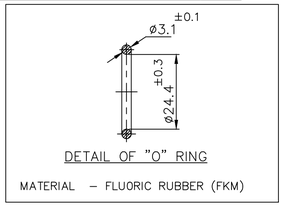

DETAIL OF "O" RING

MATERIAL – FLUORIC RUBBER (FKM)

SPIGOT GROOVE DETAIL
SCALE 5:1

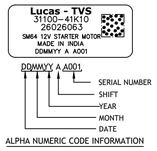

Ⓑ EXAMPLE FOR 2D DMC DETAILS

28 DIGIT 2D DMC CONTENT MUST BE AS FOLLOWS:

No.of DIGIT	4 DIGIT				2D		11 DIGIT											6 DIGIT						1D	4 DIGIT			
DIGIT	1	2	3	4	5	6	7	8	9	10	11	12	13	14	15	16	17	18	19	20	21	22	23	24	25	26	27	28
LETTER	1	2	3	4	L	1	3	1	1	0	0	–	4	1	K	1	0	0	6	1	0	2	4	A	A	0	0	1
INDICATION	VENDOR CODE				LINE CODE		MSIL PART NUMBER											DATE,MONTH & YEAR OF MFG.						SHIFT	STARTER SERIAL NUMBER			

MATING FACES MARKED THUS ∗ AND MATING AREAS SHOULD BE FREE FROM POWDER COATING.

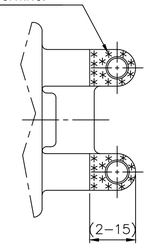

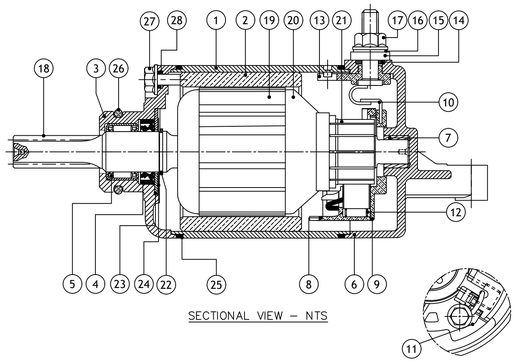

SECTIONAL VIEW – NTS

No.	PART NAME	QTY	MATERIAL	REMARKS	PART NUMBER
1.	YOKE	1		BLACK - SEMI GLOSSY FINISH	26 26 7699
2.	MAGNET	4	FERRITE		26 26 3823
3.	D.E BRACKET	1	ADC 12		26 26 7737
Ⓑ 4.	OIL SEAL	1	FKM (VITON)	JIS B2402 (PROPRIETARY)	26 26 7704
5.	NEEDLE BEARING	1			26 25 9904
6.	C.E. BRACKET	1	ADC 12		26 26 7702
7.	BEARING BUSH	1	SINTERED BRONZE		26 24 2082
8.	BRUSH HOLDER	1	PHENOLIC		26 24 6201
9.	INSUL PLATE	1	PHENOLIC		26 24 6208
10.	INSUL PLATE, BRUSH & TERMINAL ASSEMBLY	1			26 24 6206
11.	BRUSH & EYELET ASSEMBLY	2			26 24 6210
Ⓑ 12.	BRUSH SPRING	4	HARD DRAWN STEEL WIRE PIANO WIRE	SWPB - JIS G 3522	26 24 6202
13.	INSUL BUSH	1	PHENOLIC		26 24 9795
14.	SEALING RING	1	ACM	JIS B2401	26 26 6411
15.	INSUL WASHER	1	FABRIC BASE SYNTHETIC RESIN BONDED LAMINATED SHEET.	IS:2036	26 26 2394
16.	PLAIN WASHER	1	STEEL	IS:513	26 24 6090
17.	FLANGE NUT-TERMINAL	1	STEEL		26 24 6091
18.	ARMATURE SHAFT	1	MEDIUM CARBON STEEL		26 26 7697
19.	LAMINATION PACK	1	SILICON STEEL		26 26 5160
20.	CONDUCTOR	1	COPPER		26 26 1255
21.	COMMUTATOR	1	COPPER		26 24 6506
22.	CIRCLIP	1	SPRING STEEL	IS:3075	26 25 9937
23.	LOCK PLATE	1	STEEL	IS:2507	26 25 9909
Ⓑ 24.	THRUST SHIM	1	SPRING STEEL	IS:1570-C80	26 25 9938
Ⓑ 25.	SEAL (YOKE)	2	FKM (VITON)	SES N 3201	26 26 3834
Ⓑ 26.	O - RING (SPIGOT)	1	FKM (VITON)	SES N 3201	26 26 7725
Ⓑ 27.	THROUGH BOLT	2	STEEL	AISI 10B25 \ AISI 15B25	26 26 3833
28.	O - RING (THRU BOLT)	2	ACM	JIS B2401	26 26 6412

BILL OF MATERIAL (BOM)

ALTERATION	DATE & NOTE No.	ISSUE
DRAWING RELEASED FOR CUSTOMER APPROVAL.		
AS REQUESTED BY CUSTOMER, NOISE SPECIFICATION ADDED IN NOTE 16,17. BOM UPDATED. QR CODE PASTING DIMN. 10±5 ADDED. POWDER COATING THICKNESS & SST STANDARD ADDED.	DRN32648 07.04.25	A
DRAWING RELEASED FOR PRODUCTION.		
NON COATING AREA ADDED. ENGRAVING TEXT HEIGHT ADDED. GEAR ACCURACY PARAMETERS WERE UPDATED IN GEAR SPECIFICATIONS TABLE. STARTER MOTOR OUTPUT PERFORMANCE EVALUATION TEMPERATURE CHANGED. PERFORMANCE EVALUATION TEMPERATURE CHANGED IN PERFORMANCE CURVE. IN BOM SERIAL NUMBER 4, 12, 24, 25, 26 & 27 RAW MATERIAL SPECIFICATION UPDATED. (C OUTLINE DRAWING WORD ADDED).	DCN40524 27.05.25	B
IN GEAR SPECIFICATION TABLE PROFILE MUST NOT BE CONCAVE & CONTROL BY AVERAGE... DETAILS ADDED.		
AS REQUESTED BY CUSTOMER SHEET 4 ADDED & SHEET NUMBER UPDATED IN TEMPLATE.		
AS PER CUSTOMER REQUEST DMC LABEL PASTING LOCATION CHANGED		

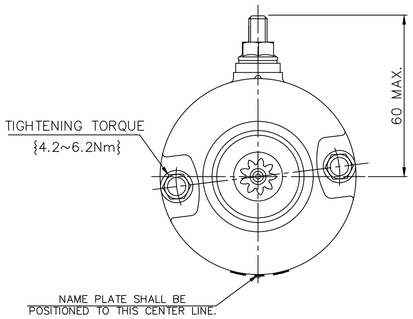

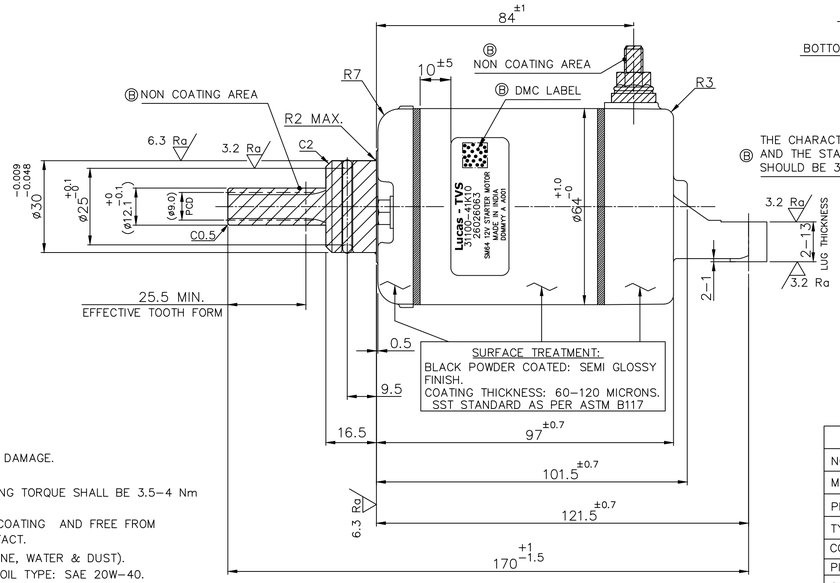

SURFACE TREATMENT:
BLACK POWDER COATED: SEMI GLOSSY FINISH.
COATING THICKNESS: 60–120 MICRONS.
SST STANDARD AS PER ASTM B117

Ⓑ THE CHARACTER HEIGHT OF "Lucas TVS" AND THE STARTER MOTOR MODEL SHOULD BE 3 mm OR MORE

POSITIVE TERMINAL M6 X 1–6g, IS: 4218

BOTTOM NUT TIGHTENING TORQUE 6.8–7.5 Nm

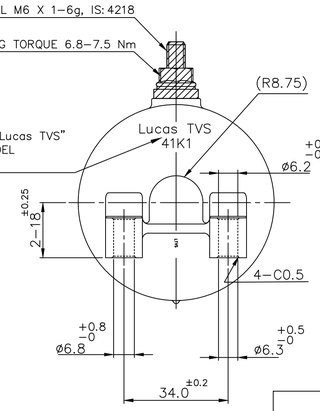

NOTE:–

1. PARAMETERS WITHIN THE () ARE FOR REFERENCE ONLY.
2. BATTERY CABLE TO BE ASSEMBLED AT CUSTOMER END.
3. BATTERY CABLE TO BE SECURED PROPERLY TO AVOID INSUL BUSH DAMAGE.
4. ALL MATERIALS COMPOSING THIS PART IS FREE FROM ASBESTOS.
5. TOP NUT TO BE ASSEMBLED AT CUSTOMER END AND THE TIGHTENING TORQUE SHALL BE 3.5–4 Nm TO SECURE WIRING HARNESS.
6. MATING FACES MARKED THUS ∗ SHALL BE FREE FROM POWDER COATING AND FREE FROM ANTI CORROSION TREATMENT TO ENSURE GOOD ELECTRICAL CONTACT.
7. THE STARTER MOTOR SHALL BE LEAK PROOF (AGAINST OIL, GASOLINE, WATER & DUST).
8. OIL SHALL BE APPLIED ON GEAR PORTION FOR RUST PREVENTION. OIL TYPE: SAE 20W–40.
9. ALL PLATED COMPONENTS SHALL BE WITH TRIVALENT PASSIVATION.
10. END FLOAT OF ARMATURE : 0.2 – 0.8 mm
11. CONFORM TO THE RESTRICTIONS ON USE OF ENVIRONMENTAL IMPACT SUBSTANCES SPECIFIED IN SES N2402.
12. QR CODE STICKER SHALL BE PASTED ON MOTOR.
13. NEW BRUSH LENGTH: 9MM, USEFUL BRUSH LENGTH: 5.5MM
14. SUPPLIERS SHALL REPORT THEIR PROPOSAL AND BE APPROVED BY SMC IN ADVANCE WHEN CHANGING SHAPE, PROCESS AND MOLDING, ETC. OF COMPONENTS THAT AFFECT THEIR FUNCTIONS AND QUALITY.
15. INTERNAL RESISTANCE: 11~14mΩ. TO BE CONFIRMED AFTER VALIDATIONS.
16. NOISE dB : ENGAGEMENT CONDITION WITH SUITABLE MATING GEAR– 82 dB
    FREE RUN CONDITION – 74 dB
    } (TO BE FINALIZED AFTER VALIDATIONS).
17. LEAK SPECIFICATION: FULL LEAK: ALLOWABLE LEAK: 60 Pa Max
    SPIGOT LEAK: ALLOWABLE LEAK: 50 Pa Max

THIS DRAWING IS MADE TO MEET ALL SMC'S REQUIREMENT AS SHOWN IN THE DESIGN SPECIFICATION DRAWING (DWG NO.31100-41KX0-1) AND NOT TO INFRINGE UPON ANY THIRD PARTY'S INTELLECTUAL PROPERTY RIGHTS.

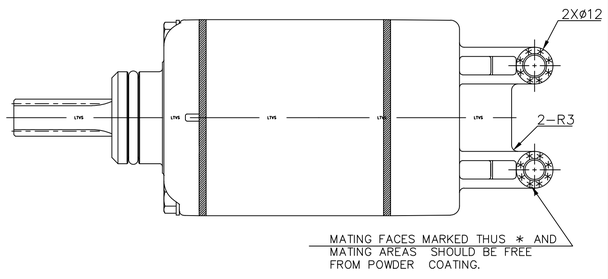

GEAR SPECIFICATION		
NO. OF TEETH	9	
MODULE	1.0	
PRESSURE ANGLE	20°	
TYPE OF TOOTH	INVOLUTE	
CORRECTION FACTOR	(+0.700)	
PITCH DIAMETER	ø9.0	
OUTSIDE DIAMETER	$ø12.1^{+0}_{-0.1}$	
ROOT DIAMETER	ø7.9	
SPAN OVER 2 TEETH	$5.033^{-0.03}_{-0.06}$	
TOTAL PROFILE DEVIATION, F_f	0.022	Ⓑ
PROFILE FORM DEVIATION, f_f	0.016	Ⓑ
PROFILE ANGLE DEVIATION, $f_{H\alpha}$	±0.014	Ⓑ
TOOTH TRACE TOTAL DEVIATION, F_β	0.028	Ⓑ
TOOTH TRACE ANGLE DEVIATION, $f_{H\beta}$	0.025	Ⓑ
SINGLE PITCH ERROR	0.018	
PCD RUN OUT	0.032	
GEAR ACCURACY (FOR OTHER CHARACTERISTICS)	DIN 3962 CLASS 9 (1978)	
PROFILE MUST NOT BE CONCAVE		Ⓑ
CONTROL BY AVERAGE OF FOUR TEETH ABOUT 90° EACH		Ⓑ
HEAT TREATMENT		
METHOD	INDUCTION HARDENING, QUENCHING & TEMPERING.	
HARDNESS	SURFACE : 620~750 Hv10/ 56~62 HRC	
CASE DEPTH	0.5 – 2.5 mm DEEP FROM BOTTOM OF TOOTH (HV392)/40HRC.	

PROVISIONAL PERFORMANCE CURVE

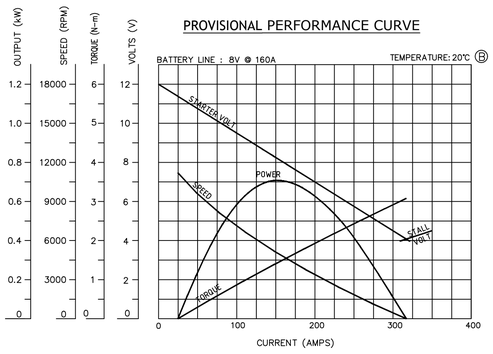

STARTER SPECIFICATION (CHECK POINTS)Ⓑ					
OUTPUT	12V, 0.6 kW				
EXCITATION TYPE	PERMANENT MAGNET TYPE				
RATED TIME	30 SECONDS				
ROTATION	CLOCKWISE (VIEW FROM THE DRIVE END)				
PERFORMANCE SPECIFICATION AT 23°C±5°C Ⓑ	CONDITION	VOLTAGE (V)	CURRENT (A)	TORQUE (Nm)	SPEED (R.P.M.)
	NO LOAD	11.25	30 MAX.	---	7800 MIN.
	LOAD	10	80 MAX.	0.588	4300 MIN.
	LOCKED	5	360 MAX.	1.961 MIN.	---
WEIGHT	1.45 kgf APPROX.				

Lucas–TVS PART NO : 260 26 063
CUSTOMER PART NO : 31100–41K10

ANY MODIFICATION IN THIS DRAWING SHOULD FIRST BE INCORPORATED IN THE CAD FILE

The drawing/document is copy right and the property of Lucas–TVS LTD.

It must not be copied (in whole or in part) used for manufacture or otherwise disclosed to anyone except to the extent necessary and even that without prior written consent of the Company.

Any copies of this drawing/document made by any method must also include a copy of this legend.©

Any violation of secrecy will result in a claim for damages.

LIMITS UNLESS STATED

DIMENSIONS WITH:–		
NO DECIMALS	(e.g 22)	±0.4mm
ONE DECIMALS	(e.g 22.1)	±0.2mm
TWO DECIMALS	(e.g 22.12)	±0.1mm
ANGLES :	FOR CHAMFERS	± 5 DEGS.
	FOR OTHERS	± 30 MINS.

MATERIAL	
SPECN.	
TREATMENT	
FINISH	
SUPERSEDES:–	

REF:– 31100–41KX0–1

OUTLINE OF SM64 STARTER MOTOR Ⓑ(C OUTLINE DRAWING)

SM64 – SUZUKI GIXXER (EXPORT) (SHEET 1 OF 4) Ⓑ

SIGNIFICANT CHARACTERISTIC
CRITICAL CHARACTERISTIC

GEOMETRIC TOLERANCE SYMBOLS

CHARACTERISTIC	SYM	CHARACTERISTIC	SYM
STRAIGHTNESS	—	PROFILE OF A SURFACE	⌓
FLATNESS	⏥	PARALLELISM	//
ROUNDNESS	○	SQUARNESS	⊥
CYLINDRICITY	⌭	ANGULARITY	∠
PROFILE OF A LINE	⌒	RUNOUT	↗
POSITION	⌖	M.M.C	Ⓜ
CONCENTRICITY	◎	DATUM	▲
SYMMETRY	⌯	TRUE POSITION (BOXED DIMN)	25

SCALE:– 1:1	
DRAWN N.BALAJI	DATE 17.09.24
CHECKED N.SRIDAR	TRACED
APPROVED	REDRAWN: MANIMARAN M

DRG. No. C26 26 7691 B

THIS DRAWING MAY ONLY BE ALTERED IF THE PART REMAINS INTERCHANGEABLE. IF NOT INTERCHANGEABLE A NEW DRAWING NUMBER MUST BE TAKEN.

A1