SleepStageNet: Deep Learning for Automated Sleep Stage Classification

CSEP 590A Deep Learning | Group Project

• Manish Das • Nithin Balachandran • Regith Lingesh
• Shrinivas Acharya • Thangakumar Dhanasekaran

Problem & Motivation

- Sleep disorders affect millions worldwide
- Diagnosis requires overnight polysomnography (PSG) — expensive, manual, expert-dependent
  - A trained technician takes 2–4 hours to score one night (800–1000 epochs)
- Goal: Automate 5-class sleep stage classification from raw EEG signals
- Clinical impact: Reduce cost, enable scalable sleep monitoring

Sleep Stages

- 5 classes per AASM guidelines:
  - Wake (W) — alert / drowsy
  - N1 — light sleep, transition stage
  - N2 — intermediate sleep, sleep spindles
  - N3 — deep / slow-wave sleep, delta waves
  - REM — Rapid Eye Movement, dreaming
- Each 30-second epoch is classified independently

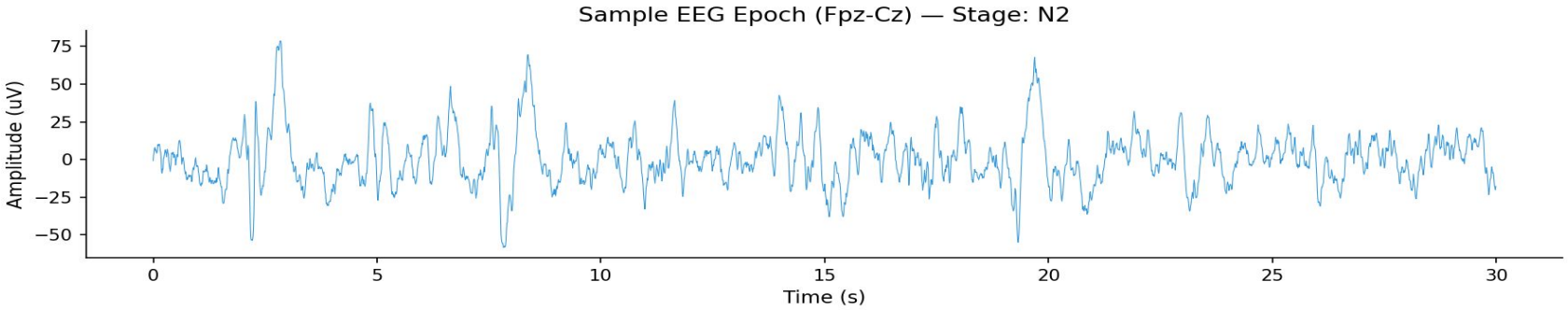

100 Hz, 30 s epoch (3000 samples), Fpz-Cz channel

Dataset

- Sleep-EDF v1 from PhysioNet (public benchmark)
  - 39 whole-night PSG recordings from 20 healthy subjects
  - EEG channel: Fpz-Cz at 100 Hz → 3000 samples per 30 s epoch
  - 42,230 total epochs across all recordings

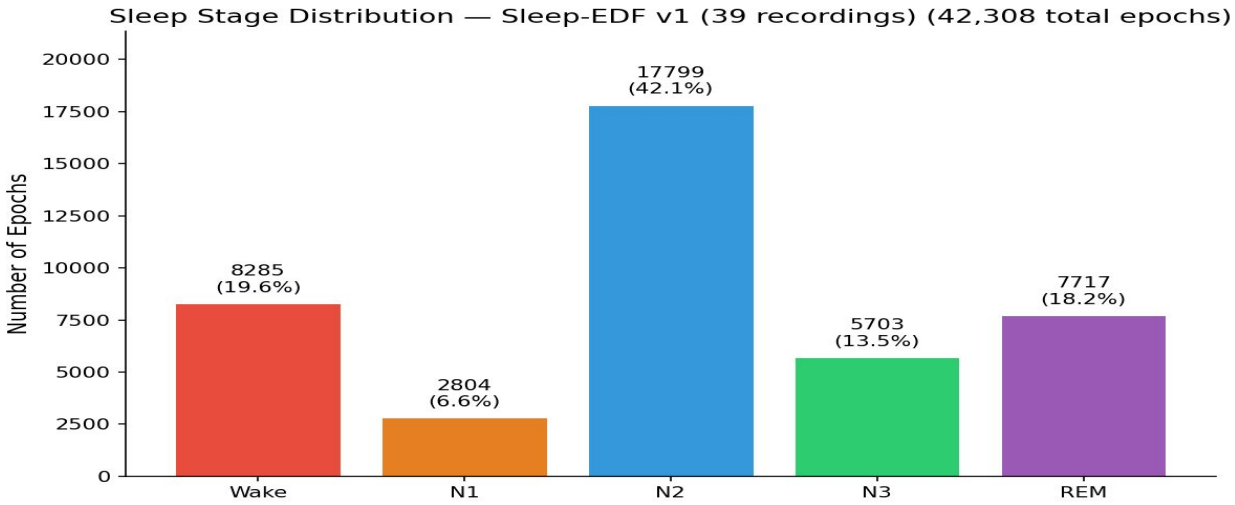

Note: The dataset is heavily imbalanced: N2 alone makes up 42.1% of all epochs while N1 is only 6.6%.
This imbalance is why we need multiple metrics — accuracy alone would be misleading (a model predicting all N2 gets 42%)

Evaluation

1. **Overall Accuracy**
   - **What:** Fraction of correctly classified epochs out of all epochs.
   - **Why it matters:** Simple to understand, but misleading with imbalanced data.
   - **Limitation:** Doesn't reflect poor N1 performance (only 6.6% of data).
2. **Macro F1 Score**
   - **What:** Unweighted average of per-class F1 scores. Treats all 5 classes equally regardless of size.
   - **Why it matters:** This is our primary metric. It penalizes the model for doing poorly on rare classes (N1).
3. **Weighted F1 Score**
   - **What:** Average of per-class F1 scores, weighted by class support (number of samples).
   - **Why it matters:** Reflects performance proportional to how often each stage appears.

Evaluation

4. **Cohen's Kappa**
   - **What:** Agreement between predictions and ground truth, corrected for chance agreement. Ranges from -1 to 1 (0 = random, 1 = perfect).
   - **Why it matters:** Standard metric in clinical sleep staging. For reference, interscorer agreement between human experts is typically kappa ~0.75-0.85. Clinical threshold: Kappa > 0.60

Evaluation Protocol

20-fold Leave-One-Subject-Out Cross-Validation (LOSO-CV)

- Each fold: train on 19 subjects, test on 1 held-out subject
- Ensures model generalizes to unseen subjects (no data leakage)

Approach Overview

Start from a strong CNN baseline, then improve systematically:

- Model 1→ Baseline: CNN Only
  - Multi-scale dual-path CNN: small filters (~0.5s) capture spindles, large filters (~4s) capture slow waves
- Model 2 → Temporal: CNN + BiLSTM
  - Same CNN extracts per-epoch features → 2-layer BiLSTM learns sleep stage transitions across epochs
- Model 3 → Conformer: CNN + Transformer
  - Replaces BiLSTM with Conformer blocks: self-attention (global patterns) + depthwise conv (local transitions)
- All experiments compared via the same 20-fold LOSO-CV protocol

Model	Architecture	Params
CNN Only	Dual-path multi-scale CNN	~191K
CNN+BiLSTM	Multi-scale CNN + 2-layer BiLSTM	~851K
Conformer	Multi-scale CNN + Conformer blocks	~1.34M

Baseline

Baseline Architecture — DeepSleepNet-Lite

- Input: 90-second window (3 × 30 s epochs) = 9,000 samples
- Dual parallel CNN paths:
  - Path 1: Small filters (~50 samples) — fine-grained, high-frequency features
  - Path 2: Large filters (~400 samples) — coarse, low-frequency features
- Concatenated features → Fully Connected → Softmax (5 classes)
- Training: Adam optimizer, lr = 1e-4, 100 epochs, batch size 100
- Oversampling applied to handle class imbalance during training

Baseline - Architecture of DeepSleepNet-Lite

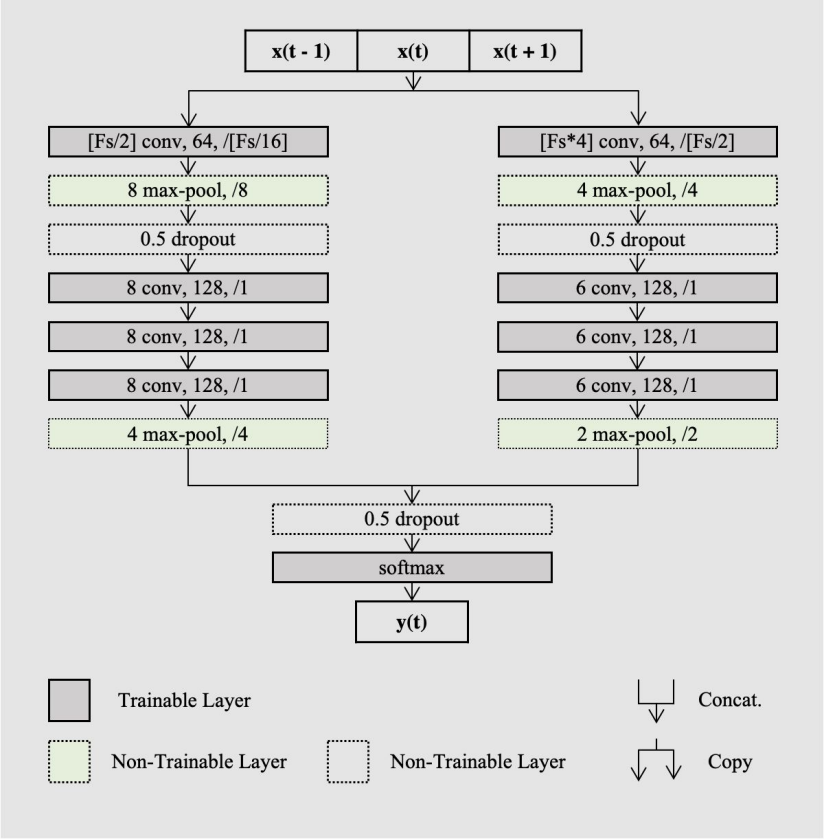

Baseline Results: Per-Class F1 and Training Curves

- *Baseline Model Achieves 0.753 Macro F1 Across 5 Sleep Stages*

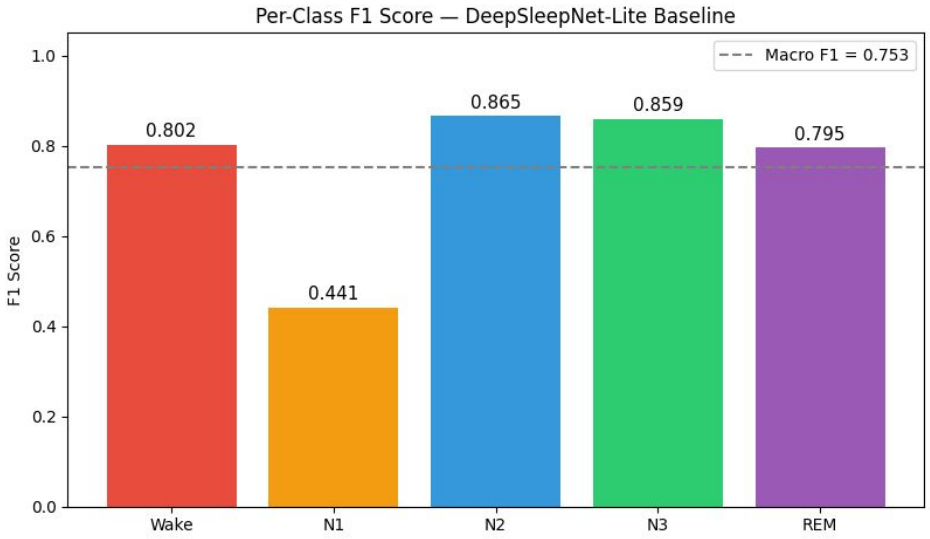

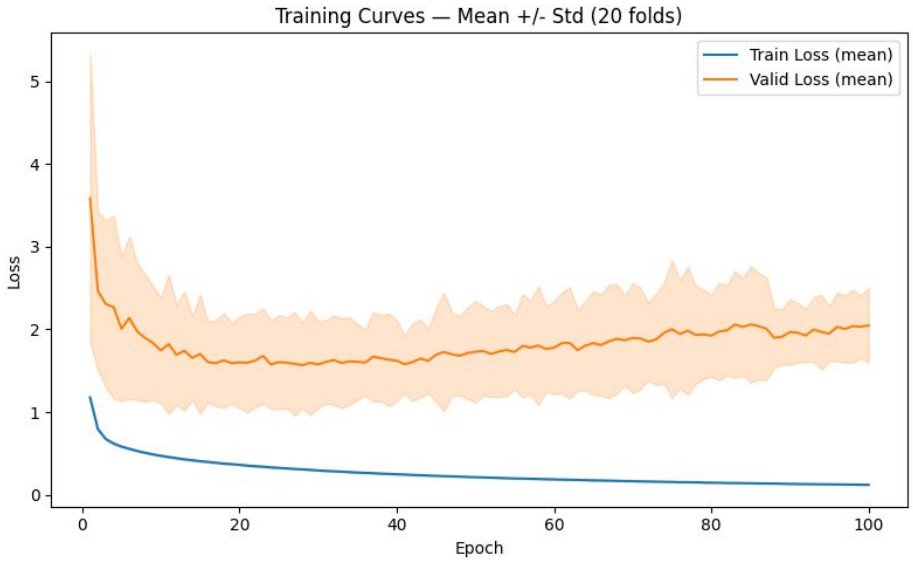

Confusion Matrix

N3 and N2 Classified Well; N1 Confusion Persists
Model Excels at N2/N3, Struggles Most with N1 (48% Recall)

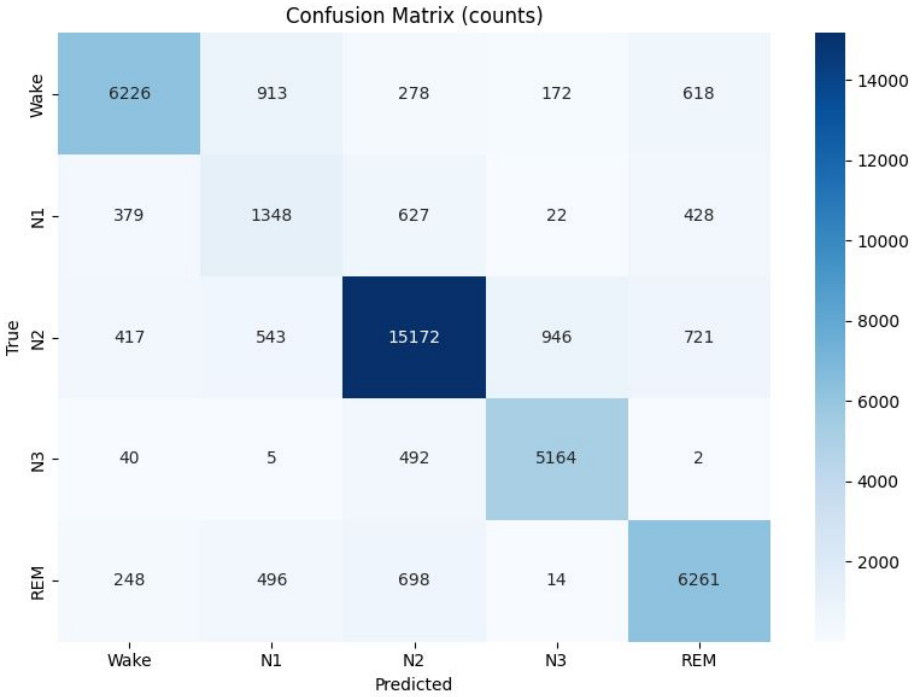

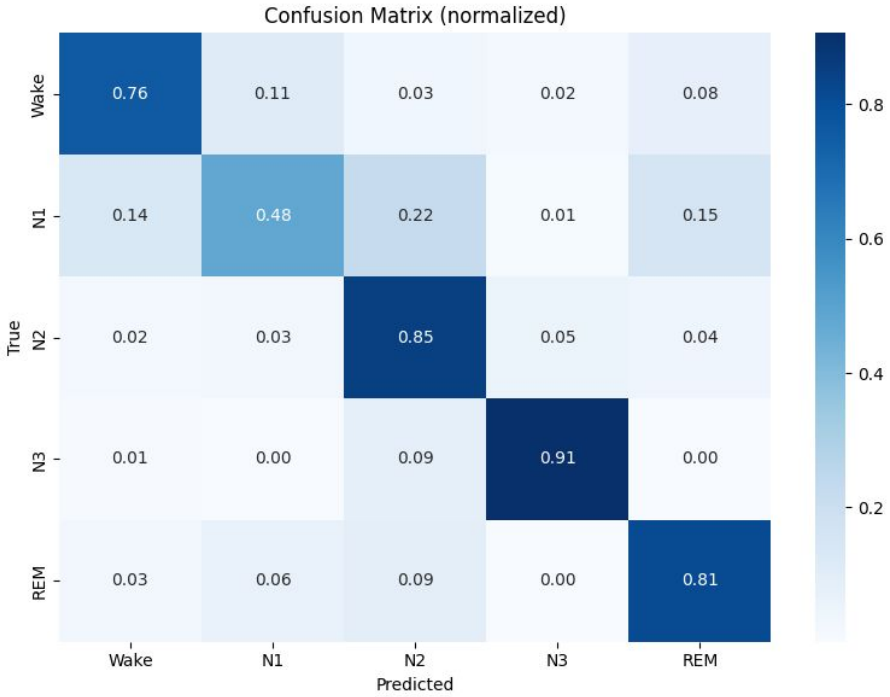

Temporal Model

Why Temporal Modeling?

- Sleep stages are not independent — they follow a biological sequence.

- CNN + BiLSTM

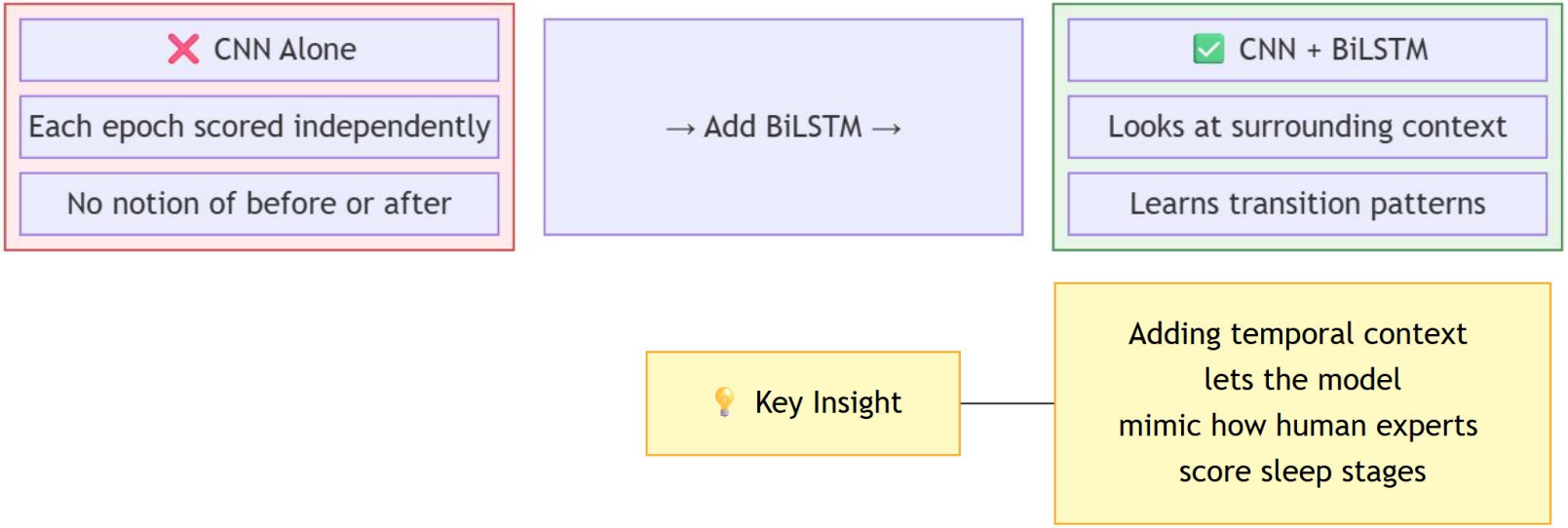

Improvement — Temporal Context Modeling

- Problem: CNN classifies each epoch mostly independently
  - Ignores natural temporal progression of sleep stages
- Solution: BiLSTM over a sequence of CNN epoch features
- 3-stage training

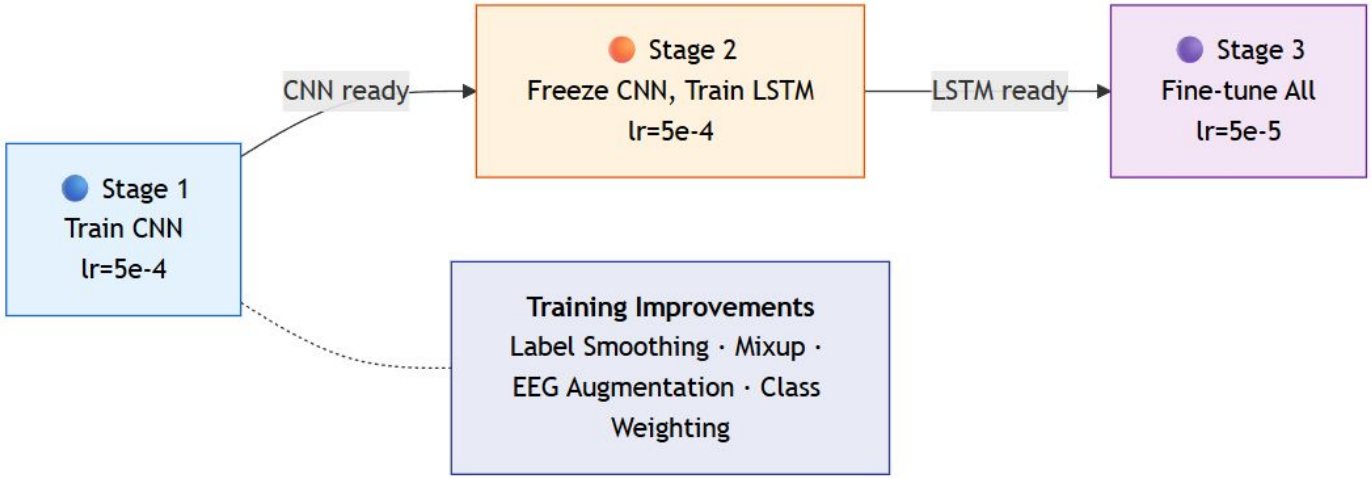

Temporal Model Architecture

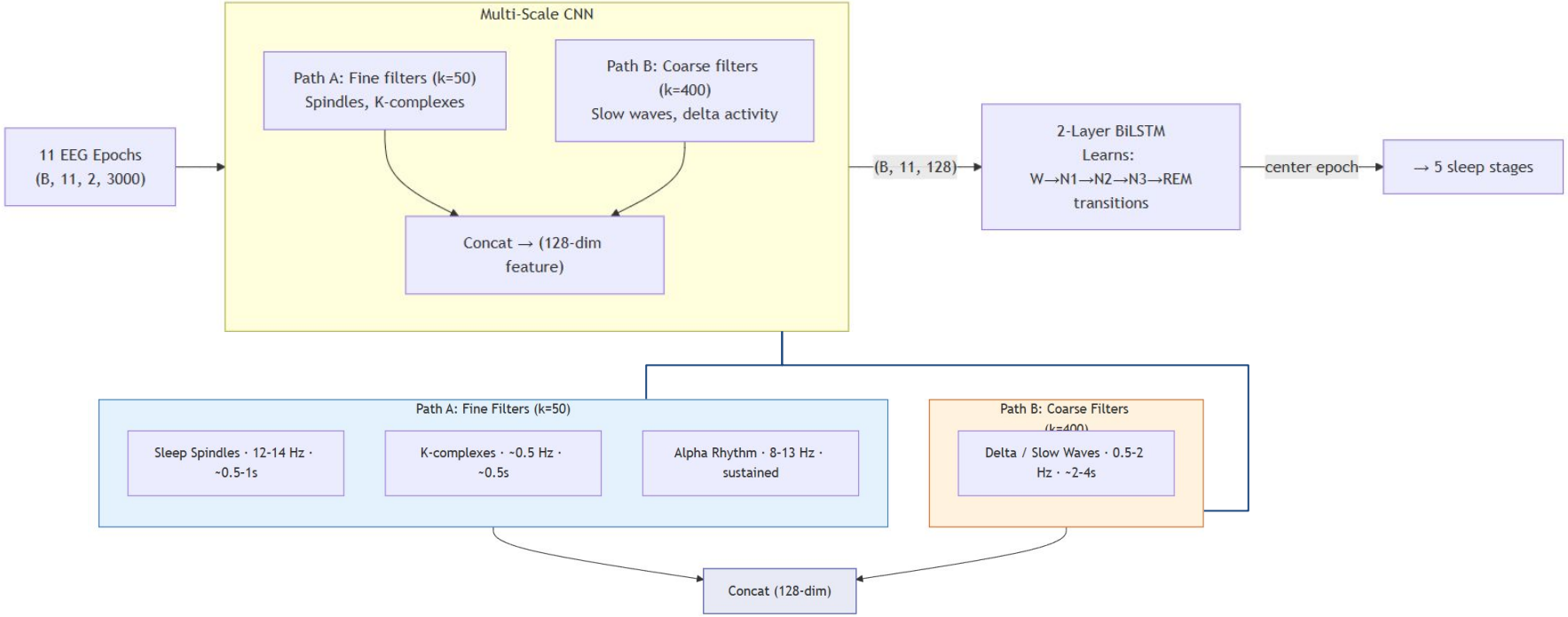

Conformer Model

Why Conformer Model?

- Attention captures global sleep cycles, convolution captures local N2 -> N3 transitions. Together: Best of both worlds!

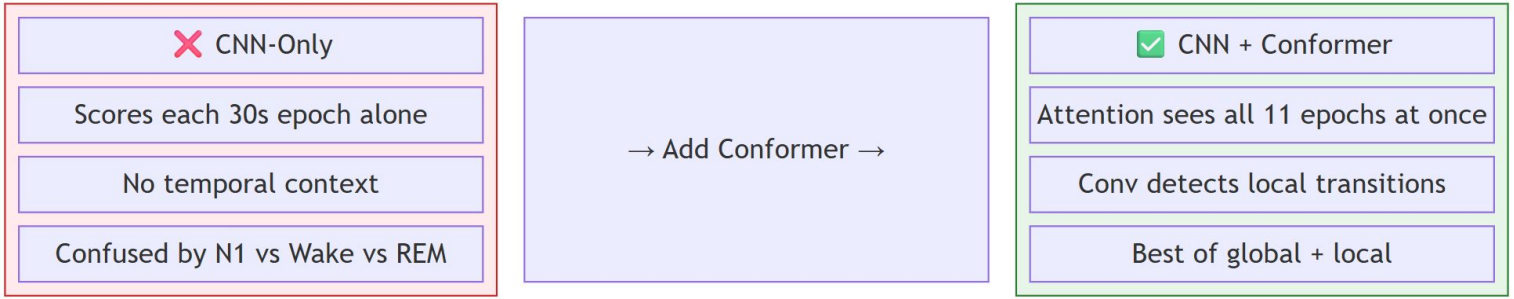

- Conformer vs BiLSTM — How They See Context:

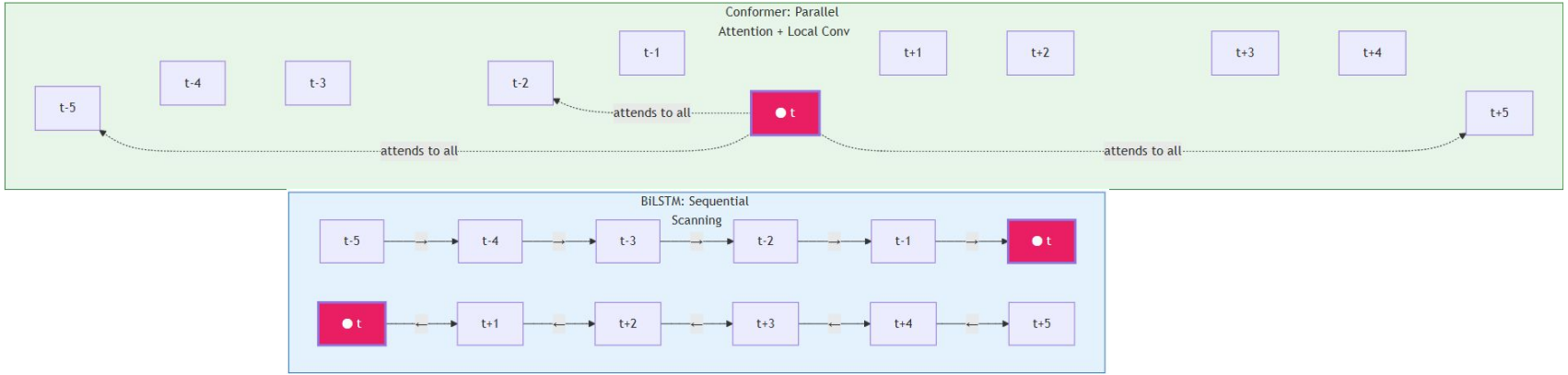

Conformer Model Architecture

- Originally from speech recognition (Gulati et al., 2020), the **Conformer** combines the best of Transformers and CNNs in a single block

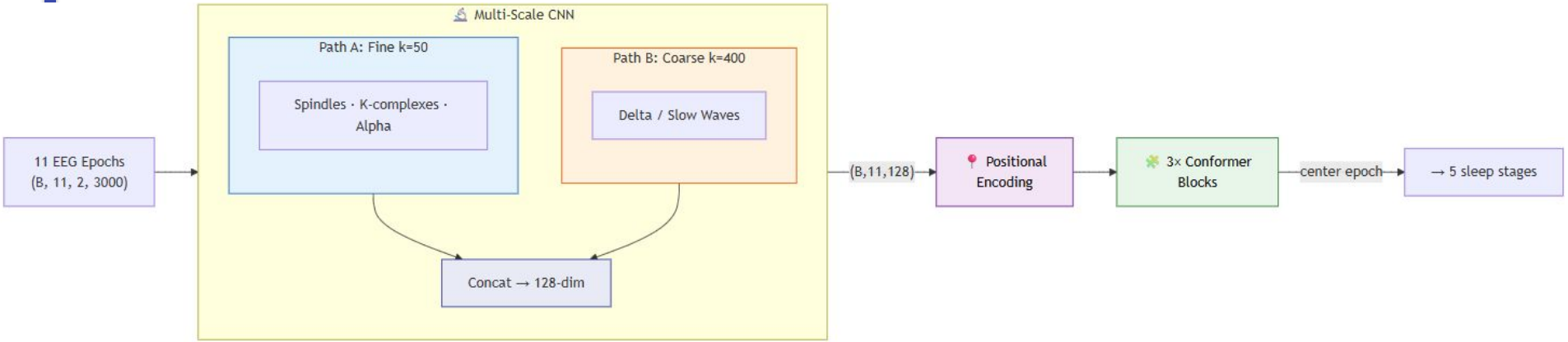

- Each Conformer block uses the **Macaron** structure (half-step FFN sandwich):

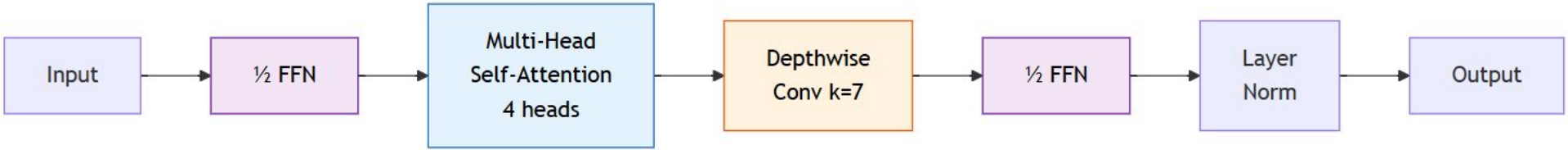

Training

- Multi-Stage Training

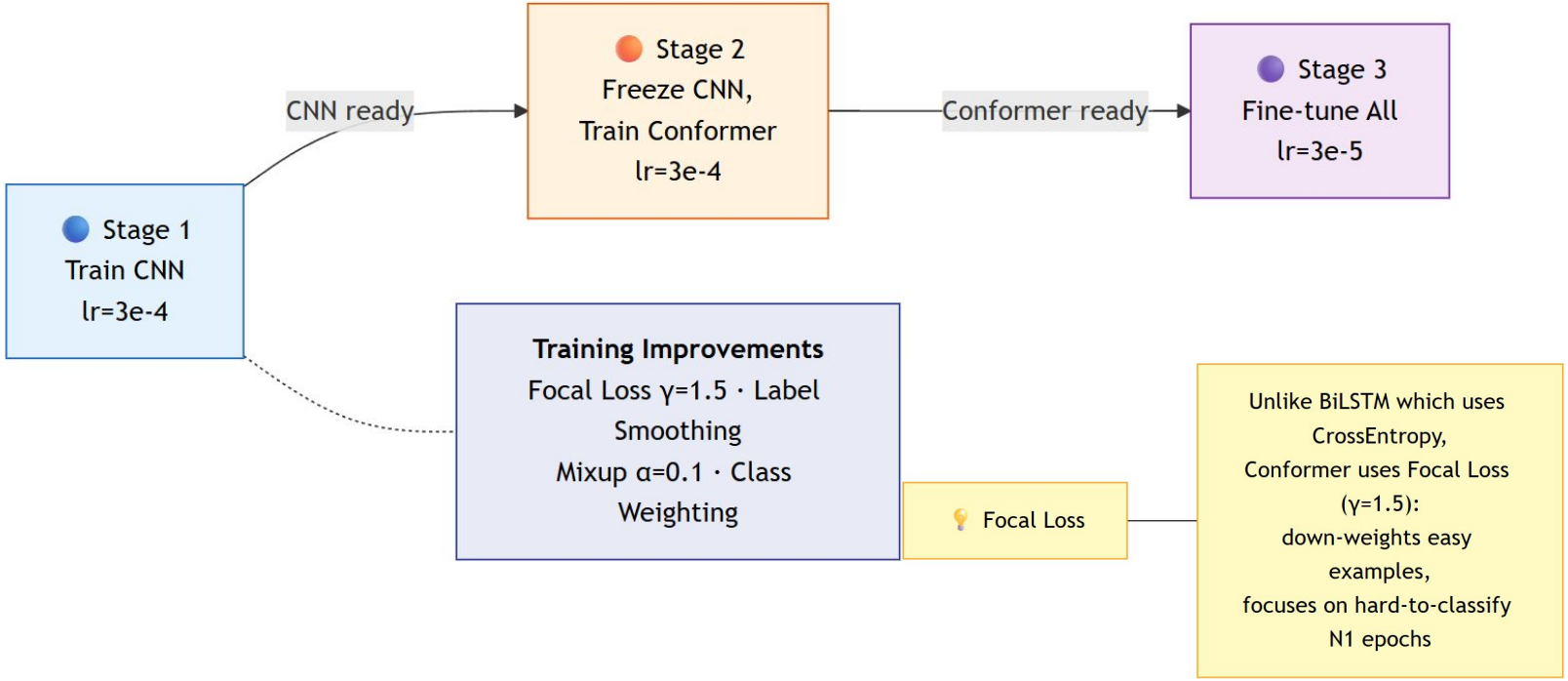

Results

Results Comparison

Model	Accuracy	Macro F1	Cohen's κ	N1 F1
Baseline (DeepSleepNet-Lite)	80.9%	0.753	0.740	0.441
Temporal (CNN + BiLSTM) ★	**83.9% ± 6.5%**	**0.79 ± 0.067**	**0.778 ± 0.091**	**0.519**
Conformer (CNN + Transformer)	83.0% ± 7.3%	0.78 ± 0.07	0.768 ± 0.1	0.500

Per-Class F1 (Temporal CNN+BiLSTM vs Baseline)

Stage →	Wake	N1 (bottleneck)	N2	N3	REM
Baseline	0.802	0.441	0.865	0.859	0.795
Temporal ★	**0.881**	**0.519**	**0.869**	**0.877**	**0.856**
Conformer	0.870	0.500	0.869	0.874	0.834

Key Takeaways

1 Temporal context is the single biggest lever

Both CNN + BiLSTM and CNN + Conformer beat the baseline on every metric, confirming that modelling transitions between consecutive sleep epochs — not just individual 30-second windows — is critical for accurate staging.

2 CNN + BiLSTM is the best model overall ★

83.9% accuracy (+3 pp), Macro F1 = 0.79 (+0.037), Cohen's κ = 0.778. It outperforms the more complex Conformer on every metric, showing that recurrent temporal modelling fits EEG sequences better than pure attention.

3 N1 (light sleep) remains the hardest class — but improved

BiLSTM raises N1 F1 from 0.441 → 0.519 (+17.7% relative). N1 is a brief transitional stage whose EEG overlaps Wake and REM; temporal context helps the model use neighbouring epochs as disambiguating cues.

4 Cohen's κ = 0.778 — approaching human-expert agreement

Inter-scorer κ among human sleep technicians is typically 0.75 – 0.85. The BiLSTM model now sits at the lower bound of that range, suggesting clinical-grade reliability is within reach.

Limitations & Future Work

⚠️ Limitations (evidence from results)

- **N1 detection remains bottleneck across all models**
  - Baseline 0.441 → Temporal 0.477: only +3.6% after full retraining
  - Intrinsic spectral overlap of N1 with Wake & REM limits ceiling
- **Single EEG channel (Fpz-Cz) — all models share this constraint**
  - EOG/EMG channels used by human scorers are absent
- **High subject-to-subject variance (std ≈ 0.07–0.10)**
  - Temporal fold 8: only 60.9% acc — single-subject outlier drags mean
  - Conformer std (0.076) > Enhanced CNN+BiLSTM std (0.069)
- **Conformer underperforms Enhanced CNN+BiLSTM (82.9% vs 84.1%)**
  - Self-attention needs larger datasets to surpass recurrent biases
- **Small dataset: 20 subjects — limits generalisation claims**
  - No external validation set (SHHS, MASS) tested

→ Future Work (grounded in findings)

- **Improve N1: targeted augmentation & loss shaping**
  - Stage-conditional focal loss with higher α for N1 specifically
  - Synthetic N1 generation via EEG-GAN / sleep-spindle injection
- **Multi-modal input to break Fpz-Cz ceiling**
  - Add EOG + EMG channels — directly mirrors clinical scoring
- **Subject-adaptive fine-tuning to reduce fold variance**
  - Few-shot personalisation layer on top of frozen backbone
  - Meta-learning (MAML) for fast subject adaptation
- **Scale Conformer with pre-training (larger corpus)**
  - Pre-train on SHHS (5,000+ subjects), fine-tune on Sleep-EDF
  - Expected: attention > recurrence advantage realised
- **Deployment-ready pipeline**
  - Real-time inference for wearable EEG (OpenBCI, Muse)
  - Uncertainty output (MC-Dropout) for low-confidence flagging

Thank You

Q & A

Key Takeaways

- **1. All three approaches improve on the same 20-fold LOSO-CV benchmark (Sleep-EDF v1, 39 recordings)**
  - Baseline 80.9% → Temporal (CNN+BiLSTM) 84.1% → Conformer (CNN + Transformer) 83.1%
- **2. Temporal context is the single biggest lever — adding BiLSTM over L=5 epochs gained +2.2% accuracy and +3.6% N1 F1**
  - Sleep stage transitions (W→N1→N2→N3→REM) give the sequence model a structural advantage over epoch-wise CNN
- **3. Enhanced training (focal loss γ=2, mixup, cosine warmup, longer context L=11) adds another +1.0% accuracy**
  - Multi-scale CNN backbone captures both fine (spindles) and coarse (delta) EEG features simultaneously
- **4. Conformer (82.9%) slightly underperforms Enhanced CNN+BiLSTM (84.1%) on this dataset size**
  - Attention mechanisms may need more data to outshine recurrent inductive biases for temporal EEG
- **5. N1 remains the persistent bottleneck across all models (0.441 → 0.477 in Temporal; enhanced similar)**
  - N1 is intrinsically ambiguous — only 6.6% of data, overlaps spectrally with both Wake and REM
- **6. High fold-to-fold variance (std ≈ 0.07–0.09) confirms subject-level variability dominates model choice**
  - Larger datasets (SHHS, MASS) or subject-adaptive fine-tuning needed for robust clinical deployment
- **7. All enhanced models approach human inter-scorer Kappa range (0.75–0.85); Enhanced CNN+BiLSTM κ = 0.783**

Aggregate Test Set Performance (20-Fold CV)

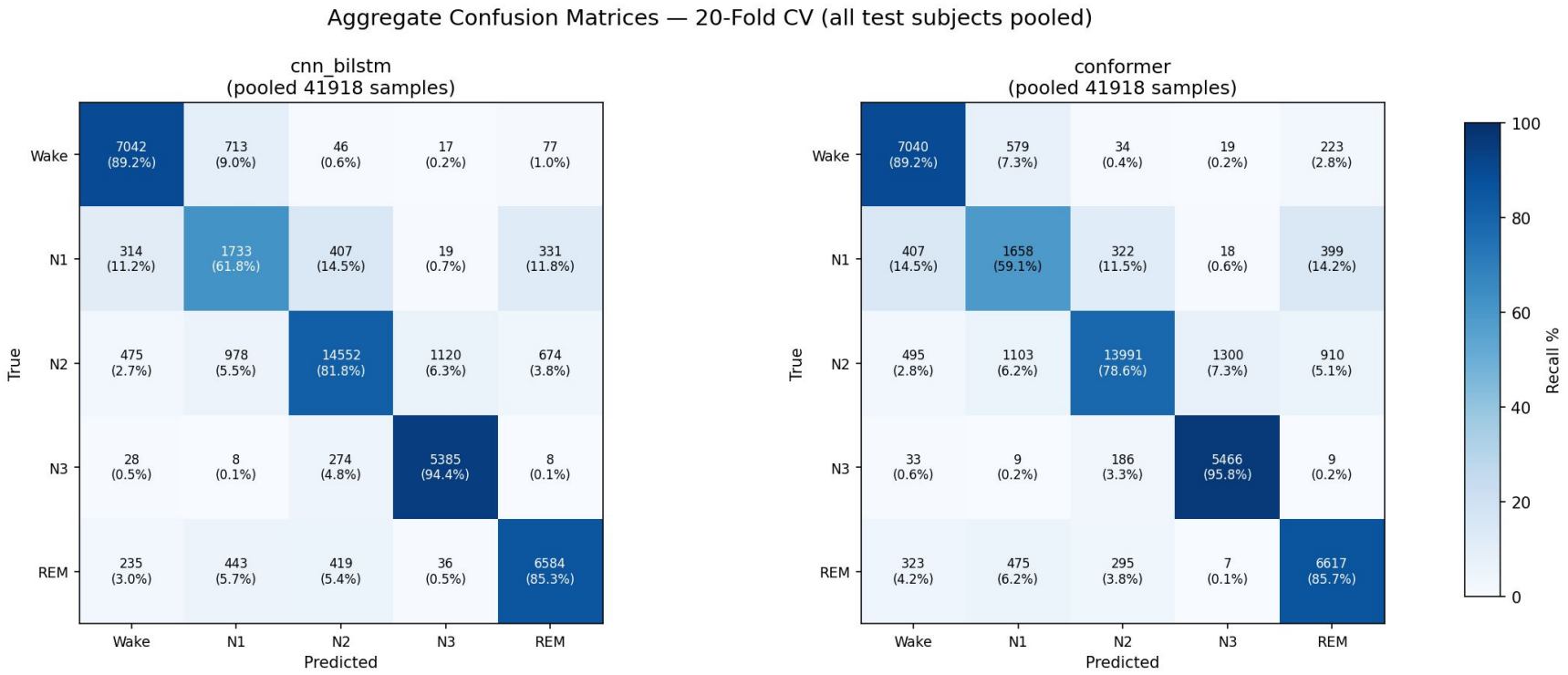

Combined predictions across all 20 folds for both models

Able to achieve N1 improvements (**61.8%**)

Per-Class F1 Scores: CNN+BiLSTM vs Conformer

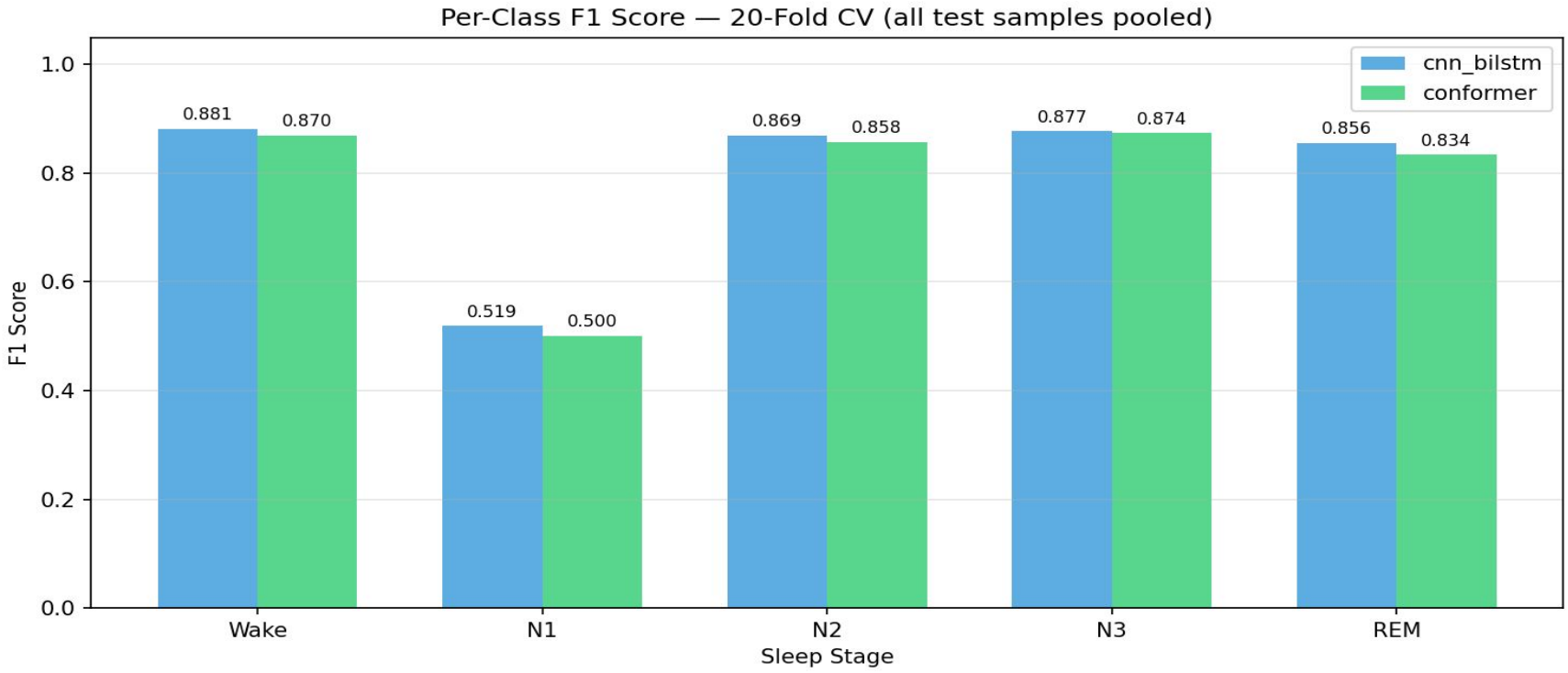

Conformer improves N1 and REM detection relative to BiLSTM