Reg. No 08/27184

BHALKESHWAR SUGARS LTD.

Reg. Office, Basaveshwar Chowk, Near I.B. Bhalki - 585 328 BIDAR, Karnataka, India
Factory at : Madkatti Cross, Bajolga. Tq. Bhalki Dist. Bidar

Office Ph : 08484-268724
08484-268725
H.C. Ph : 08484-267525
Email : bhalkeshwarsugar@gmail.com

An INTEGRATED COMPLEX FOR SUGAR, POWER, DISTILLERY & BIOFEEDSTOCK

Ref. No.

Date : 01/06/2022

CERTIFICATE

This is to certify that **Ms. Swatikaa**, having (USN: 3GN20BA047) MBA student of Guru Nanak Dev Engineering College, Bidar, VTU Belagavi, has completed her Internship on **"Human Resource"** in our Bhalkeshwar Sugars Ltd, from 26.03.2022 & 07.05.2022.

She has took keen interest in learning during her Internship.

Date: 13.06.2022

Place: Bajolga

Asst. General Manager

PRINCIPAL
Guru Nanak Dev Engg. College, Bidar

EXECUTIVE SUMMARY

Each and every organization desires to achieve their goals and objectives by making employees engaged with their work. The organization or factory has culture to manage employees towards the purpose. Employees are assets to the factory where the employees helps the factory to accomplish their goals and needs. Gainfulness is among the important additional items in the particular advancement and endurance associated with a rich industry, plus worker commitment is the particular establishment for making improvements to affectivity and capabilities, right this moment additional deals or even deals.

Laborers' occupations are usually a two-strategy arrangement. In the basic stage, the particular alliance can keep designates within the right events, the particular issues as well as the noteworthy causes. Thus, laborers contribute through a development in productivity and upgraded execution, which achieves higher advantages.

PRINCIPAL
Guru Nanak Dev Engg. College, Bidar

GURU NANAK DEV ENGINEERING COLLEGE

BIDAR

DEPARTMENT OF MBA

CERTIFICATE

This is to certify that, **Miss. SYEDA BIBI SARA** bearing **USN: 3GN20BA048** is a Bonafide student of the Master of Business Administration course of the Institute (2020-2022), affiliated with Visvesvaraya Technological University, Belagavi. The project report on **"CUSTOMER SATISFACTION TOWARDS KAJARIA TILES AND SANITATION AT MKB TRADING COMPANY"** is prepared by her under the guidance of **PROF. KALYANRAO K.** in partial fulfillment of the requirements for the award of the degree of Master of Business Administration of Visvesvaraya Technological University, Belagavi Karnataka.

Prof. Kalyan Rao.k

(Internal Guide)

Prof. Jyoti Ainapur
Head of the Department
Master of Business Administration
G.N.D.Engg. College, BIDAR-585403
(KARNATAKA)
(HOD)

Dr. Dhananjay D Muktedar
PRINCIPAL
Guru Nanak Dev Engg. College
BIDAR
(Principal)

EXTERNAL VIVA-VOCE

AME OF THE EXAMINERS:

SIGNATURE WITH DATE

Amrenath. N. K
LDEC, Bidar

9/11/22

Kalyanrao. K.

9/11/22

PRINCIPAL
Guru Nanak Dev Engg. College, Bidar

Kajaria
TRANSFORM YOUR WORLD

B TRADING COMPANY

R

TO WHOM SO EVER IT MAY CONCERN

This is to certify that **Miss. Syeda Bibi Sara (USN NO:3GN20BA048)** a student from Guru Nanak Dev Engineering College Bidar Karnataka affiliated to Visvesvaraya Technological University, Belagavi. Undertook a project on **"A STUDY ON CUSTOMER SATISFACTION TOWARDS KAJARIA TILES AND SANITATION"** she has completed the project successfully during the period of 26-03-2022 to 07-05-2022

Her performance and behaviour during the project work found good. We wish her every success in life

Manager,

MKB TRADING COMPANY

BIDAR

For MKB Trading Company

Proprietor

PRINCIPAL
Guru Nanak Dev Engg. College, Bidar

EXECUTIVE SUMMARY

Kajaria ceramics limited

The tiles industries are growing in the Indian market, where consumers are always moving and they are not satisfied with the same product. The company's Hercules job is to retain customers. Therefore, they place a high priority on customer satisfaction.

MKB Trading Company is a subsidiary of Kajaria Tile Company Limited, an Indian subsidiary wholly owned by Japan. Founded in 1999, it is the fourth Kajaria Ceramics Ltd. in India after Kinetic Kajaria Tile Limited (1984-1998), Hero Kajaria (1984-2011) and Kajaria Seal Tile India (1995-2012). HMSI was established in 1999 at Manesar in Gurgaon district of Haryana. Kajaria is one of the largest tile manufacturers in the world.

Research Objectives:

- Determines customer satisfaction with Kajaria
- Understand the importance of customer satisfaction.

Limitations of the study:

- Lack of professionalism; This is one of the major drawbacks of this particular study. Because professionals can do better than us.
- Lack of skills; Lack of certain research skills such as communication reduces the ability to report.

Conclusion:

- Of the approximately 100 respondents, all were using Kajaria
- Of the 100 respondents, 60% responded know about the product through Friends and relatives.

Suggestions:

- Dealers must pay a discount when purchasing. The company / showroom may offer special offers to Customers at the time of booking.
- In order to please customers, the company must maintain the quality of after-sales visi

PRINCIPAL
Guru Nanak Dev Engg. College, Bidar

GURU NANAK DEV ENGINEERING COLLEGE, BIDAR

DEPARTMENT OF MBA

This is to certify that **Miss. TABASSUM BEGUM** being USN: **3GN20BA049** is a bonafide student of **Master of Business Administration** course of the institute **(2020-2022)**, affiliated to **VisvesvarayaTechnological University, Belagavi.** Project report on **"A STUDY OF TREND ANALYSIS, COMPERATIVE ANALYSIS & RATIO ANLYSIS TOWARDS DCC BANK BIDAR"** at **"DCC BANK BIDAR"** is prepared by her the guidance **PROF. MAHESH KUMAR M,** in partial fulfillment of the requirements for the award of the degree of Master of Business Administrations of Visvesvaraya Technological University, Belagavi.

Prof. Mahesh Kumar M
(Internal Guide)

Prof. Jyoti Ainapur
Head of the Department
(HOD)
Master of Busines Administratio
G.N.D.Engg. College, BIDAR-585403
(KARNATAKA)

Dr. Dhananjay D Muktedar
PRINCIPAL
(Principal)
Guru Nanak Dev Engg. Colleg
BIDAR

EXTERNAL VIVA VICE

Name of Examiners: **Signature with date**

1. Dr Abhinav
2. Mahesh Kumar M

10/11/22

PRINCIPAL
Guru Nanak Dev Engg. College, Bidar

ಜಿಲ್ಲಾ ಸಹಕಾರ ಕೇಂದ್ರ ಬ್ಯಾಂಕ್ ನಿ., ಬೀದರ.

ಬಸವೇಶ್ವರ ಸರ್ಕಲ್ ಹತ್ತಿರ, ಮುಖ್ಯ ರಸ್ತೆ, ಬೀದರ - 585 401 (ಕರ್ನಾಟಕ)

THE DISTRICT CO-OPERATIVE CENTRAL BANK LTD., BIDAR

Near Basaveshwar Chowk, BIDAR - 585 401 (Karnataka)

NO: DCCB/DGM_AOI/2022-23/ 502

Date:16-04-2022

To,
The Principal
Guru Nanak Dev Engineering
College Manhalli, Road,
BIDAR.505401.

Dear Sir,

Sub: Granting permission for project work to MBA student in our organization regarding.
Ref: Your office letter dated:16.04.2022.

With reference to the above cited subject, we are here by informing you that, we are granting the permission to your student **Miss.Tabassum Begum** for preparing the project work from 26.03.2022 to 07.05.2022.

This is for your kind information.

Thanking you.

Yours faithfully,

CHIEF EXECUTIVE OFFICER,
DCC BANK LTD., BIDAR.

PRINCIPAL
Guru Nanak Dev Engg. College, Bidar

EXECUTIVE SUMMARY

The Bidar district co-operative central Bank Ltd. Was established in the year 1992 under the Hyderabad co-operative societies Act with registration No.20944 dated 13/8/1922with an objective to provide short-term an medium term loan for agriculture purpose. Thearea of operation of the bank is extended to the whole of Bidar disrict.

Each and every company wants to know its states whether it is fulfilling its objectiveof wealth maximization and it is moving towards and profitability so the study is under taken to know the financial soundness of the bank with the help of RATIO ANALYSIS, TREND ANALYSIS, COMPERATIVE ANALYSIS.

PRINCIPAL
Guru Nanak Dev Engg. College, Bidar

GURU NANAK DEV ENGINEERING COLLEGE

BIDAR

DEPARTMENT OF MBA

CERTIFICATE

This is to certify that, **Miss. VAISHNAVI** bearing **USN: 3GN20BA050** is a Bonafide student of the Master of Business Administration course of the Institute (2020-2022), affiliated to Visvesvaraya Technological University, Belagavi. Project report on **"CUSTOMER PREFERENCE AT CHOCOLATE ROOM CAFE"** is prepared by her under the guidance of **PROF. ARATI BIRADAR**, in partial fulfillment of the requirements for the award of the degree of Master of Business Administration of Visvesvaraya Technological University, Belagavi Karnataka.

Prof. Arati Biradar	**Prof. Jyoti Ainapur**	**Dr. Dhananjay D Muktedar**
(Internal Guide)	Head of the Department (HOD) Master of Business Administration G.N.D.Engg. College, BIDAR-585403 (KARNATAKA)	PRINCIPAL Guru Nanak Dev Engg. College BIDAR

EXTERNAL VIVA-VOCE

NAME OF THE EXAMINERS:	**SIGNATURE WITH DATE**
1. Dr. Bhaskarappa. Huseikanna	31/10/22
2. Arati B	31/10/22

PRINCIPAL
Guru Nanak Dev Engg. College, Bidar

Scanned with OKEN Scanner

The chocolate room cafe

Banjara Hills, Hyderabad-500034

CERTIFICATE

This is to certify that **miss. Vaishnavi(3GN20BA050)**, a student of Guru Nanak Dev Engineering College Bidar Karnataka affiliated with Visvesvaraya Technological University, Belagavi. Undertook a project on **"A STUDY ON CUSTOMER SATISFACTION TOWARDS THE CHOCOLATE ROOM CAFE"** she has completed the project successfully from the period 26-03-2022 to 07-05-2022

Her performance and behaviour during the project work were found good. We wish all the best for her future end over

THE CHOCOLATE ROOM
Banja Hills, Hyderabad
Telengana-500034
Manager.

PRINCIPAL
Guru Nanak Dev Engg. College, Bidar

Scanned with OKEN Scanner

EXECUTIVE SUMMARY

The café are growing in the Indian market, where consumers are always moving and they are not satisfied with the same product. The company's Hercules job is to retain customers. Therefore, they place a high priority on customer satisfaction. Chaitanya Kumar and Vikas Punjabi started the Chocolate Room (TCR Cafe), a network of chocolate cafes, in Geelong, Australia, in 2006. TCR India purchased the brand in 2007.

In 2013, The Chocolate Room began opening locations in Colombo, Sri Lanka. In 2016, The Chocolate Room established a location on M.M.Alam Road in Lahore, Pakistan.

Research Objectives:-

- Determines customer satisfaction with chocolate room café
- Understand the importance of customer satisfaction.

Limitations of the study:-

- Lack of professionalism; This is one of the major drawbacks of this particular study. Because professionals can do better than us.
- Lack of skills; Lack of certain research skills such as communication reduces the ability to report.

Conclusion:-

- Of the 100 respondents, 60% responded know about the product through Friends and relatives.

Suggestions:-

- Café owners must pay a discount to daily customers.

Scanned with OKEN Scanner

PRINCIPAL
Guru Nanak Dev Engg. College, Bidar

GURU NANAK DEV ENGINEERING COLLEGE, BIDAR

DEPARTMENT OF MBA

This is to certify that **Mr. VEERESHA** being USN: **3GN20BA051** is a bonafide student of **Master of Business Administration** course of the institute **(2020-2022)**, affiliated to **Visvesvaraya Technological University, Belagavi.** Project report on **"CUSTOMER SATISFACTION"** towards **"ULTRATECH CEMENT SHADULALLAH ENTERPRISES AURAD"** is prepared by him Under the guidance **PROF. KALYANRAO. K,** in partial fulfillment of the requirements for the award of the degree of master of Master of Business Administrations of Visvesvaraya Technological University, Belagavi.

Prof. KALYANRAO. K (Internal guide)	Prof. Jyoti Ainapur Head of the Department (HOD) Master of Business Administration G.N.D.Engg. College, BIDAR-585403 (KARNATAKA)	Dr. Dhananjay D Muktedar PRINCIPAL (Principal) Guru Nanak Dev Engg. College BIDAR

EXTERNAL VIVA VICE

Name of Examiners:

1. Amareshwar. N. K
CAE, Bidar
2. Kalyanrao. K.

Signature with date

9/11/22

9/11/22

Scanned By Scanner Go

PRINCIPAL
Guru Nanak Dev Engg. College, Bidar

STIN : 29BVUPS9259K1Z5

Email : sadullahenterprises@gmail.com

SHADULALLAH ENTERPRISES

All Type of Building Material Suppliers & Transport

Teachers Colony, Near Kasturibai Gandhi School

APMC Cross, Bidar-Nanded Road, Aurad(B) Dist.Bidar -585326

Ref. No.

Date.

TO WHOMSOEVER IT MAY CONCERN

This is to certify that MR. Veeresha USN : 3GN20BA051 a student of MBA 4th Sem from "Guru Nanak Dev Engineering college Bidar, successfully completed his internship on"Customer Satisfaction"in Shadullah Enterprises ultratech cement,Aurad (B) from: 26-03-2022 to 07-05-2022.

His performance and behaviour during the project work found good, we would like to wish him all the best to his future. Hence certified,

Shadullah Enterprises Aurad (B)

For SHADULLAH ENTERPRISES
MANAGER

Scanned By Scanner Go

PRINCIPAL
Guru Nanak Dev Engg. College, Bidar

EXECUTIVE SUMMARY:

Cement is a folio; a material utilized for building that sets, solidifies, and sticks to other gear to commonly join them. Concrete is seldom utilized on its individual however lovely to mutually join sand and rock. Concrete blended in with fine aggregate produces mortal for brick work, or with sand and rock, produces concrete. Concrete is the most broadly involved materials in presence and is behind just water as the planet's most-drunk asset. Concrete utilized in building are normally dormant, frequently lime or calcium silicate based, which can be described as non-pressure driven or water powered separately, contingent upon the office of the concrete to set within the sight of water.

Objective of the study:

- Identity the reason behind the purchase of the Ultra Tech Cement
- To finding the consumer loyalty level through direct communication with the knowing their inclination.

Limitation of study:

- A few clients couldn't see a portion of the inquiries.
- A few clients or sellers didn't co-work well

Findings:

- The respondents purchasing the Ultra Tech Cement
- Knowing about the Ultra Tech Cement is dealer and wholesaler

Suggestions:

- The dealer giving the discount on purchasing Ultra Tech cement
- The company should maintain the quality

Scanned By Scanner Go

PRINCIPAL
Guru Nanak Dev Engg. College, Bidar

GURU NANAK DEV ENGINEERING COLLEGE BIDAR
DEPARTMENT OF MBA

CERTIFICATE

This is to certify that MR. Vishal Kumar USN 3GN20BA053 is a bonafide student of Master of Business Administration course of the Institute 2020-2022 affiliated to Visvesvaraya Technological University, Belgaum. Project report on "Customer Satisfaction towards pulsar 150cc at Sindol Bajaj Bidar" is prepared by him under the guidance of Prof. Jyoti Ainapur, in partial fulfillment of the requirements for the award of the degree of Master of Business Administration of Visvesvaraya Technological University, Belagavi Karnataka.

Prof. Jyoti Ainapur
(Internal Guide)

Prof. Jyoti Ainapur
(HOD MBA)
Head of the Department
Master of Busines Administration
G.N.D.Engg.College,BIDAR-585403
(KARNATAKA)

Dr. Dhananjay D Muktedar
PRINCIPAL
(Principal)
Guru Nanak Dev Engg. Coll.
BIDAR

EXTERNAL VIVA VOCE

NAME OF THE EXAMINERS	SIGNATURE WITH DATE
1 Dr. Bhuvappa. Hosamani	31/10/2022
Jyoti Ainapur	31/10/2022
2	

PRINCIPAL
Guru Nanak Dev Engg. College, Bidar

M/s. SINDOL BAJAJ
Authorised Dealer for : BAJAJ AUTO LIMITED
CMC No. 9-10-6/15, Opp B.V.B. College, Manhalli Road,
BIDAR - 585 401 Ph. : 08482-235655

BAJAJ | THE WORLD'S FAVOURITE INDIAN

CERTIFICATE

This is to certify that **Mr VISHALKUMAR** having registration number **3GN20BA053** of MBA 4th sem student of **GURU NANAK DEV ENGINEERING COLLEGE**, Department of MBA, has successfully completed his project work in our organization on the topic of **"Consumer Buying Behavior"**, with relevant details guided by our Sales Team, from 26/03/2022 TO 07/05/2022.

We wish him good luck for his future endeavor.

General Manager
Sindol Bajaj
Two Wheeler Dealership
Bidar-585401

M/s SINDOL BAJAJ * BIDAR * 235655

PRINCIPAL
Guru Nanak Dev Engg. College, Bidar

INTRODUCTION

In the context of marketing, "customer satisfaction" refers to the degree to which a company's products and services meet the requirements specified by its clientele.

A company's service (ratings) may be judged by how many customers (or what proportion of total customers) say they were satisfied with their experience with the business.

In this case, it is critical for businesses to keep their consumers happy. Measurements of customer happiness must be accurate and representative in order for companies to achieve this.

Firms often question their consumers whether their products or services have met or surpassed their expectations while conducting customer satisfaction surveys. If the client has a very high expectation and the product fails to meet it, they would likely rank their experience as less than gratifying.

The site of the internship project is at M/s SINDOL BAJAJ.

The project for the internship will be titled "Plusar 150CC CUSTOMER SATISFACTION AT M/s SINDOL BAJAJ."

PRINCIPAL
Guru Nanak Dev Engg. College, Bidar

GURU NANAK DEV ENGINEERING COLLEGE, BIDAR

DEPARTMENT OF MBA

CERTIFICATE

This is to certify that **Mr. YESAV** being USN: **3GN20BA054** is a bonafide student of **Master of Business Administration** course of the institute **(2020-2022)**, affiliated to **Visvesvaraya Technological University, Belagavi.** Project report on **"CUSTOMER SATISFACTION"** at **"RAMESH AUTO HONDA BIDAR"** is prepared by him the guidance **PROF. ARATI BIRADAR,** in partial fulfillment of the requirements for the award of the degree of master of Master of Business Administrations of Visvesvaraya Technological University, Belagavi.

Prof. Arati Biradar	**Prof. Jyoti Ainapur**	**Dr. Dhananjay D Muktedar**
(Internal guide)	**Head of the Department (HOD)**	**PRINCIPAL (Principal)**
	Master of Busines Administration	**Guru Nanak Dev Engg. College**
	G.N.D.Engg. College, BIDAR-585403	**BIDAR**
	(KARNATAKA)	

EXTERNAL VIVA VOCE

Name of Examiners:	**Signature with date**
1. Dr. Bhassappa Hasalamm	31/10/22
2. Arati B	31/10/22

PRINCIPAL
Guru Nanak Dev Engg. College, Bidar

HONDA

DATE: 09/05/22

Ref .No

TO WHOMSOEVER IT MAY CONCERN

This is to certify that **MR. YEASV** having registration number **3GN20BA054** of **MBA 4th semester of GURU NANAK DEV ENGINEERING COLLEGE,** Department of MBA, has successfully completed his project work in our organization on the topic of **"Customer Satisfaction towards Honda Shine"**, in **RAMESH AUTO HONDA BIDAR** with relevant details guided by our showroom dealer Bidar, from 26/03/2022 to 7/05/2022.

His performance and behavior during the project work found good, we wouldlike to wish him all the best to his future.

Hence certified,

RAMESH AUTO BIDAR

For RAMESH AUTO BIDAR

MANAGER

Ramesh Auto

HONDA EXCLUSIVE AUTHORISED DEALER

Lala Madan Mohan Bagh, Hyderabad Road, Bidar – 585401

Ph.: 0842-226601 – Reception: 8970199991

email : ramesh.honda@rediffmail.com | www.rameshhonda.com

PRINCIPAL

Guru Nanak Dev Engg. College, Bidar

EXECUTIVE SUMMARY:

The word automobile arises, via the French word automobile. That means vehicle that moves itself. Automotive manufacturing is a well-known enterprise or association they goods a wide range of products and they difficult in planning, emerging, manufacturing, marketing, anddealing of motor vehicles. Auto motive manufacturing is one of the wildest rising industries in our nation

Objective of the study:

- To identify Customer Satisfaction towards the Honda Shine
- To understanding the Honda shine road grip is excellent

Limitations of the study:

- Some respondents show more response to share information's
- Some respondents just randomly fill the questionnaire without reading it.

Findings:

- Maximum respondents are satisfied with Honda shine bike.
- Customer are come to know about the Honda Shine Bike from Friends and Relatives.

Suggestions:

- The dealer is requiring providing discount on cash purchase. The enterprise / store may give special offers to the students at the time of reservation.
- As television as the common media for advertising must be shown in local city cable and also social media.

PRINCIPAL
Guru Nanak Dev Engg. College, Bidar

GURU NANAK DEV ENGINEERING COLLEGE BIDAR

DEPARTMENT OF MBA

ESSENCE OF WISDOM IS SERVICE OF HUMANITY

GURU NANAK DEV ENGINEERING COLLEGE

BIDAR - 585403

CERTIFICATE

This is to certify that **ZEHRA RIZVI** bearing **USN: 3GN20BA055** is a Bonafide student of **Master of Business Administration** course of the institute (2020-2022), affiliated to Visvesvaraya Technological University, Belagavi. Project report on **"'JOB CONTENTMENT"** at **"HCL"** is prepared by her under the guidance **PROF.HARSHAVARDHAN M** in partial fulfilment of the requirements for the award of the degree of Master of Business Administration of Visvesvaraya Technological University, Belagavi.

Prof.Harshavardhan M (Internal guide)	Prof.Jyoti Ainapur Head of the Department Master of Busines Administration G.N.D.Engg. College, BIDAR-585403 (KARNATAKA)	Dr.Dhananjay D Muktedar (Principal) Guru Nanak Dev Engg. College BIDAR

EXTERNAL VIVA-VOICE

Name of Examiners:	Signature with date
1. Harshavardhan M	10/11/2022
2 Dr. Ashok Kumar	

PRINCIPAL
Guru Nanak Dev Engg. College, Bidar

Certificate No IA-11649

HCL INFOSYSTEMS

HCL ACADEMY

Certificate

This is to confirm that Mr./Ms. Zehra Rizvi successfully undertook the Summer Internship in the HR department of HCL - Lucknow IT City from: April 20th till May 30th 2022.

He/She was able to successfully learn, and implement the HR practices & protocols in the entire hiring cycle of a resource, ranging from calling, shortlisting, scheduling & conducting the interview, arranging for the operations' rounds, conducting assessments, processing documents, rolling out the offer, along with following up till the onboarding.

Date of Issue: 06th Jun 2022

Delivery Head-IA

HCL

PRINCIPAL
Guru Nanak Dev Engg. College, Bidar

EXECUTIVE SUMMARY

During my period spent in HCL I Achieved practical knowledge on how the human resource section of an organization operates and coordinates its activities to ensure the strong secrets to more happiness at work. In this insightful ,inspirational &humorous speech. I am also sharing here of how unconventional ways that we can find more happiness, more greatness and more success in careers.

When we start using the power of motivational leader advice,we not only increase our own happiness,but we also lift up and share happiness with each other, which strengthens our colleagues,teams and organizations.

The report initiates with an organization profile of HCL giving its background, mission, vision, its products and services, the hierarchy and of the organization, which helps in understanding the employees feeling towards their happiness made from selection process to role assignment.

A job contentment survey is a process and part of life. It identifies an overall attitude towards work and also the praise received after completion of targets

I went through so many targets completion and experienced employees going through the tough times in meeting the targets.

Each chapter contains detailed discussion of the HR features and process followed by Organization Practice which basically conveys how things are done in the HR fields.The personal relationship between the head and other subordinates also affected job contentment.

The rising cost of health care, along with retirement benefits, make benefits more important than ever. The project encompasses introduction to the topic, recruitment, selection, training , Onboarding and development and contentment.

Ultimately there is the summing up followed by all the reviews and the concepts available in the chapters.

PRINCIPAL
Guru Nanak Dev Engg. College, Bidar

GURU NANAK DEV ENGINEERING COLLEGE, BIDAR

DEPARTMENT OF MBA

CERTIFICATE

This is to certify that **Mr. SAGAR** bearing **USN: 3GN20BA056** is a bonafide student of Master of Business Administration course of the Institute 2020-2022, affiliated to Visvesvaraya Technological University, Belagavi. Project report on **"CUSTOMER SATISFACTION RELIANCE JIO" at WALI INFOCOMM BIDAR** is prepared by him underthe guidance of **PROF. JYOTI AINAPUR**, in partial fulfillment of the requirements for the award of the degree of Master of Business Administration of Visvesvaraya Technological University, Belagavi Karnataka.

Prof. Jyoti Ainapur	Prof. Jyoti Ainapur	DR. Dhananjay D Muktedar
(Internal Guide)	Head of the Department (HOD) Master of Busines Administration G.N.D.Engg. College, BIDAR-585403 (KARNATAKA)	PRINCIPAL (Principal) Guru Nanak Dev Engg. College BIDAR

EXTERNAL VIVA-VOCE

NAME OF THE EXAMINERS: **SIGNATURE WITH DATE**

1. Dr. Bhaskarappa. Hugadunu — 22/10/22
2. Prof. Jyoti A

Head of the Department
Master of Busines Administration
G.N.D.Engg. College, BIDAR-585403
(KARNATAKA)

PRINCIPAL
Guru Nanak Dev Engg. College, Bidar

Scanned with OKEN Scanner

WALI INFOCOMM GROUP

TO WHOMSOEVER IT MAY CONCERN

This is to certify that **Mr. SAGAR** having registration number **3GN20BA056** of **MBA 4th Semester** of **GURU NANAK DEV ENGINEERING COLLEGE**, Department of MBA, has successfully completed his project work in our organization on the topic of **"CUSTOMER SATISFACTION"**, in **WALI INFOCOMM BIDAR** with relevant details guided by distributer Bidar, form 26/03/2022 to7/05/2022.

His performance and behavior during the project work found good,we would like to wish him all the best to his future.

GENERAL MANAGER

Distributor Code : 660003738
WALI INFOCOMM
Shop No. 8-9-72/74 Post Box44,
S.V Patil Nagar, Udgir Road,
BIDAR, Karnataka-585401

For WALI GROUP OF INFOCOMM BIDAR

Plot No. 21 to 25 4th floor "Walli" Reliance Digital Building Udgir Road – 585401
Mobile : 9343524567 Email : wallifinfocomm@gmail.com, www.waligroup.in

PRINCIPAL
Guru Nanak Dev Engg. College, Bidar

Scanned with OKEN Scanner

EXECUTIVE SUMMERY:

India has rapidly creating flexible organization market with inconceivable potential for what's to come with close to 5,000,000. India advancement cadence has far outperformed that of different diverse business areas, similar to China and Thailand, which have assumed control additional show up at the statistics India at present hold. As demonstrated by continuous fundamental. Allies in specific regions can acquire the handset at for all intents and purposes no cost, by virtue of advances have reached all around. The India client can buy a handset.

NEED OF THE STUDY:

- The examination shelters clients around reliance JIO in the space bidar.
- The examination puts forth attempt to discover the fulfillment level of client of JIO

OBJECTIVES OF THE STUDY:

- To investigation of client insight equal on JIO administration.
- To comprehend the requirements of various individual.

LIMITATION OF THE STUDY:

- Unavailability of time
- Some consumer were not able to appreciate some of the question

FINDING:

- More respondents are said yes because I take only JIO sim mobile are using.
- Maximum number of respondents know above friends / relatives

PRINCIPAL
Guru Nanak Dev Engg. College, Bidar

Scanned with OKEN Scanner

GURU NANAK DEV ENGINEERING COLLEGE
BIDAR-585 403
(Affiliated to VTU Belagavi, approved by AICTE)

DEPARTMENT OF CIVIL ENGINEERING

CERTIFICATE

This is to certify that the **"EXTENSIVE SURVEY"** project work is a bonafied work carried out in partial fulfillment for the award of degree in Bachelor of Engineering in Civil Engineering in GURU NANAK DEV ENGINEERING COLLEGE BIDAR affiliated to Visvesvaraya Technological University, Belagavi during the year 2021-2022. It is certified that all corrections/suggestion indicated for internal assseesment have been incorpareted in the report and a copy of report is deposited in the deparerment library. The project has been approved as it satisfies the academic requiremnets in respect of project work prescribed for said degree.

1. AMIT	3GN18CV016
2. DEEPAK	3GN18CV025
3. G. AKASH KUMAR	3GN18CV028
4. NAGARAJ	3GN19CV052
5. NAGESH	3GN19CV053
6. NAVANATH	3GN19CV054
7. NIKHIL	3GN19CV057
8. RAVI KUMAR	3GN19CV060
9. SAAD ULLAH KHAN	3GN19CV061
10. SALOMAN	3GN19CV062
11. SIDDHAROOD	3GN19CV068
12. BALAJI	3GN20CV402
13. SUNIL	3GN20CV416

H. O. D.
Civil Engg. Dept.

P.M. SINGA
Project guide

Dr. B.B. KORI
H.O.D OF CIVIL ENGG. DEPT.

PRINCIPAL
Guru Nanak Dev Engg. College, Bidar

Scanned with CamScanner

INTRODUCTION

1.0 IMPORTANCE OF SURVEYS:-

Before undertaking any project, the first and foremost job is to carry out the survey work of the project area under consideration. Surveying is the art of determining the relative positions of points on, above or beneath the surface of the earth by means of direct or indirect measurements of distance, direction, and elevation.

For any Engineering Survey the following steps are followed,

1. Map Study
2. Reconnaissance Survey
3. Preliminary Survey
4. Detailed Survey

1. MAP STUDY:

All different possible alignment and nature of the terrain should be studied with the help of available toposheet and map of area.

2. RECONNAISSANCE SUREVY:

Reconnaissance Survey can be defined as an investigation carried out for obtaining details required for the commencement of any project by gathering information about the terrain of the project area. The main objective of this survey is to make preliminary inspection of the area to be surveyed with the view of selection of good station points. And after inspecting the ground, a rough sketch of drawings are prepared showing details of roads, buildings, trees and other important features surrounding it.

3 PRELIMINARY SURVEYS:

Preliminary Survey is large scale investigation of the result of reconnaissance survey. Their objective is to prepare a plan showing the location & nature of the field. The survey Consists of establishment a base line traverse, which is series of straight alignment. The Physical feature such as building, trees, monuments utilities, railway lines Canals etc. are located. Also the information of ground water level, rainfall intensity, type of the soil, catchment area etc. are collected.

PRINCIPAL
Guru Nanak Dev Engg. College, Bidar
Scanned with CamScanner

VISVESVARAYA TECHNOLOGICAL UNIVERSITY

JnanaSangama, Belgaum – 590014, Karnataka India

GURU NANAK DEV ENGINEERING COLLEGE BIDAR – 585403

DEPARTMENT OF CIVIL ENGINEERING

CERTIFICATE

This is to certify that the project entitled "**EXTENSIVE SURVEY**" is a Bonafide work carried out, in partial fulfillment of requirements for the award of degree of Bachelor of Engineering in Civil Engineering from Visvesvaraya Technological University, Belagavi during the academic year 2021-2022. It is certified that all corrections/suggestions indicated for internal assessment have been incorporated in the report. The activity report has been approved as it satisfies the academic requirements in aspect of activity work prescribed for the Bachelor of Engineering degree.

SUBMITTED BY B1:-

1. MA ABUBAKAR SIDDIQUI	3GN16CV350
2. AFFAN SHOEB	3GN16CV350
3. ALLEN JOSUHA	3GN18CV014
4. PRATHVIRAJ	3GN18CV079
5. ABHISHEK	3GN19CV001
6. ARUN KABA	3GN19CV011
7. GURU MAYUM NIVAS	3GN19CV019
8. MOHD ABDUL RAHMAN	3GN19CV047
9. MOHD ABDUL SABOOR SOHAIL	3GN19CV048
10. MOHD ASLAM AHMED	3GN19CV049
11. VINOD	3GN19CV080
12. ANIL	3GN20CV401
13. VENKATESH	3GN20CV418

Projectguide	head of department	principal
Prof. **pradeepkumarsinga**	**Dr. B.Bkori**	**Dr. dhananjay D. maktedar**

H. O. D.
Civil Engg. Dept.

Examiners:

1.

2.

PRINCIPAL
Guru Nanak Dev Engg. College, Bidar

Scanned with CamScanner

INTRODUCTION

1.0 IMPORTANCE OF SURVEYS:-

Before undertaking any project, the first and foremost job is to carry out the survey work of the project area under consideration. Surveying_is the art of determining the relative positions of points on, above or beneath the surface of the earth by means of direct or indirect measurements of distance, direction, and elevation.

For any Engineering Survey the following steps are followed.

1. Map Study
2. Reconnaissance Survey
3. Preliminary Survey
4. Detailed Survey

1. MAP STUDY:

All different possible alignment and nature of the terrain should be studied with the help of available toposheet and map of area.

2. RECONNAISSANCE SUREVY:

Reconnaissance Survey can be defined as an investigation carried out for obtaining details required for the commencement of any project by gathering information about the terrain of the project area. The main objective of this survey is to make preliminary inspection of the area to be surveyed with the view of selection of good station points. And after inspecting the ground, a rough sketch of drawings are prepared showing details of roads, buildings, trees and other important features surrounding it.

3 PRELIMINARY SURVEYS:

Preliminary Survey is large scale investigation of the result of reconnaissance survey. Their objective is to prepare a plan showing the location & nature of the field. The survey Consists of establishment a base line traverse, which is series of straight alignment. The Physical feature such as building, trees, monuments utilities, railway lines Canals etc. are located._Also the information of ground water level, rainfall intensity, type of the soil, catchment area etc. are collected.

PRINCIPAL
Guru Nanak Dev Engg. College, Bidar

Scanned with CamScanner

GURU NANAK DEV ENGINEERING COLLEGE

BIDAR – 585403

(Affiliated toVTU Belgaum, Approved by AICTE New Delhi)

DEPARTMENT OF CIVIL ENGINEERING

CERTIFICATE

*This is to certify that the project entitled "**EXTENSIVE SURVEY**" is a Bonafide work carried in partial fulfillment of requirements for the award of degree of Bachelor of Engineering in Civil Engineering from Visvesvaraya Technological University, Belagavi during the academic year 2021-2022. It is certified that all corrections/suggestions indicated for internal assessment have been incorporated in the report. The activity report has been approved as it satisfies the academic requirements in aspect of activity work prescribed for the Bachelor of Engineering degree.*

SUBMITTED BY:

1. DIKSHA SINGODE	**3GN18CV026**
2. NEHA MALGE	**3GN19CV055**
3. NIDHI	**3GN19CV056**
4. PREETI POLEKAR	**3GN19CV058**
5. PRIYANKA	**3GN19CV059**
6. SIRASGE AKSHATA	**3GN19CV069**
7. SOUNDARYA	**3GN19CV070**
8. SUSHMA	**3GN19CV072**
9. VANISHREE	**3GN19CV079**
10. PRANITA	**3GN19CV085**
11. MONIKA YAMME	**3GN19CV051**

Project guide	head of department	principal
Prof. **pradeep kumar singa**	**Dr. B.B kori**	**Dr. dhananjay D. maktedar**

Examiners: 1. 17/02/22 *2.*

PRINCIPAL
Guru Nanak Dev Engg. College, Bidar

Scanned with CamScanner

INTRODUCTION

1.0 IMPORTANCE OF SURVEYS:-

Before undertaking any project, the first and foremost job is to carry out the survey work of the project area under consideration. Surveying_is the art of determining the relative positions of points on, above or beneath the surface of the earth by means of direct or indirect measurements of distance, direction, and elevation.

For any Engineering Survey the following steps are followed,

1. Map Study
2. Reconnaissance Survey
3. Preliminary Survey
4. Detailed Survey

1. MAP STUDY:

All different possible alignment and nature of the terrain should be studied with the help of available toposheet and map of area.

2. RECONNAISSANCE SUREVY:

Reconnaissance Survey can be defined as an investigation carried out for obtaining details required for the commencement of any project by gathering information about the terrain of the project area. The main objective of this survey is to make preliminary inspection of the area to be surveyed with the view of selection of good station points. And after inspecting the ground, a rough sketch of drawings are prepared showing details of roads, buildings, trees and other important features surrounding it.

3 PRELIMINARY SURVEYS:

Preliminary Survey is large scale investigation of the result of reconnaissance survey. Their objective is to prepare a plan showing the location & nature of the field. The survey Consists of establishment a base line traverse, which is series of straight alignment. The Physical feature such as building, trees, monuments utilities, railway lines Canals etc. are located._Also the information of ground water level, rainfall intensity, type of the soil, catchment area etc. are collected.

PRINCIPAL
Guru Nanak Dev Engg. College, Bidar

Scanned with CamScanner

GURU NANAK DEV ENGINEERING COLLEGE

BIDAR – 585403

(Affiliated toVTU Belgaum, Approved by AICTE New Delhi)

DEPARTMENT OF CIVIL ENGINEERING

CERTIFICATE

*This is to certify that the project entitled "**EXTENSIVE SURVEY**" is a Bonafide work carried in partial fulfillment of requirements for the award of degree of Bachelor of Engineering in Civil Engineering from Visvesvaraya Technological University, Belagavi during the academic year 2021-2022. It is certified that all corrections/suggestions indicated for internal assessment have been incorporated in the report. The activity report has been approved as it satisfies the academic requirements in aspect of activity work prescribed for the Bachelor of Engineering degree.*

SUBMITTED BY:

1. GURURAJ	**3GN18CV033**
2. MD ZUBER	**3GN18CV053**
3. MOHAMMED MIFTAH UDDIN	**3GN18CV058**
4. MOHAMMED TALHA AHMED	**3GN18CV063**
5. SANKET DHUMMANSURE	**3GN19CV063**
6. SHASHIKUMAR H K	**3GN19CV064**
7. SHIVSHANKAR KHERE	**3GN19CV065**
8. SHUBHAM	**3GN19CV066**
9. SHUBHAM	**3GN19CV047**
10. KRISHNA	**3GN20CV405**
11. VIVEK ROSHAN NANDA	**3GN19CV084**
12. STEVEN	**3GN20CV415**

Project guide	H: O. D. Civil Engg. Dept. head of department	principal
Prof. **pradeep kumar singa**	**Dr. B.B kori**	**Dr. dhananjay D. maktedar**

PRINCIPAL
Guru Nanak Dev Engg. College, Bidar

Scanned with CamScanner

INTRODUCTION

1.0 IMPORTANCE OF SURVEYS:-

Before undertaking any project, the first and foremost job is to carry out the survey work of the project area under consideration. Surveying_is the art of determining the relative positions of points on, above or beneath the surface of the earth by means of direct or indirect measurements of distance, direction, and elevation.

For any Engineering Survey the following steps are followed,

1. Map Study
2. Reconnaissance Survey
3. Preliminary Survey
4. Detailed Survey

1. MAP STUDY:

All different possible alignment and nature of the terrain should be studied with the help of available toposheet and map of area.

2. RECONNAISSANCE SUREVY:

Reconnaissance Survey can be defined as an investigation carried out for obtaining details required for the commencement of any project by gathering information about the terrain of the project area. The main objective of this survey is to make preliminary inspection of the area to be surveyed with the view of selection of good station points. And after inspecting the ground, a rough sketch of drawings are prepared showing details of roads, buildings, trees and other important features surrounding it.

3 PRELIMINARY SURVEYS:

Preliminary Survey is large scale investigation of the result of reconnaissance survey. Their objective is to prepare a plan showing the location & nature of the field. The survey Consists of establishment a base line traverse, which is series of straight alignment. The Physical feature such as building, trees, monuments utilities, railway lines Canals etc. are located._Also the information of ground water level, rainfall intensity, type of the soil, catchment area etc. are collected.

PRINCIPAL
Guru Nanak Dev Engg. College, Bidar

Scanned with CamScanner

GURU NANAK DEV ENGINEERING COLLEGE
BIDAR-585 403
(Affiliated to VTU Belagavi, approved by AICTE)

DEPARTMENT OF CIVIL ENGINEERING

CERTIFICATE

This is to certify that the **"EXTENSIVE SURVEY"** project work is a bonafied work carried out in partial fulfillment for the award of degree in Bachelor of Engineering in Civil Engineering in GURU NANAK DEV ENGINEERING COLLEGE BIDAR affiliated to Visvesvaraya Technological University, Belagavi during the year 2021-2022. It is certified that all corrections/suggestion indicated for internal assseesment have been incorpareted in the report and a copy of report is deposited in the deparerment library. The project has been approved as it satisfies the academic requiremnets in respect of project work prescribed for said degree.

1. MOHD IMADUDDIN	3GN18CV067
2. MUSTAFA KHAN	3GN18CV069
3. NIKHAIL CH	3GN18CV073
4. SRIKANT	3GN19CV071
5. SYED AHMED HASHMI	3GN19CV073
6. SYED FATEEN AHMED	3GN19CV074
7. SYED MASOOD AHMED	3GN19CV076
8. SYED OMAR FAROOQ HUSSAIN	3GN19CV077
9. ULLAS	3GN19CV078
10. SHIVKUMAR	3GN20CV413
11. VENKATESH	3GN18CV115
12. VIPUL	3GN19CV081
13. VISHNU KUMAR	3GN19CV082
14. VIVEK	3GN19CV083

P.M. SINGA
Project guide

Dr. B.B. KORI
H.O.D OF CIVIL ENGG. DEPT..

Scanned with CamScanner

PRINCIPAL
Guru Nanak Dev Engg. College, Bidar

INTRODUCTION

1.0 IMPORTANCE OF SURVEYS:-

Before undertaking any project, the first and foremost job is to carry out the survey work of the project area under consideration. Surveying is the art of determining the relative positions of points on, above or beneath the surface of the earth by means of direct or indirect measurements of distance, direction, and elevation.

For any Engineering Survey the following steps are followed,

1. Map Study
2. Reconnaissance Survey
3. Preliminary Survey
4. Detailed Survey

1. MAP STUDY:

All different possible alignment and nature of the terrain should be studied with the help of available toposheet and map of area.

2. RECONNAISSANCE SUREVY:

Reconnaissance Survey can be defined as an investigation carried out for obtaining details required for the commencement of any project by gathering information about the terrain of the project area. The main objective of this survey is to make preliminary inspection of the area to be surveyed with the view of selection of good station points. And after inspecting the ground, a rough sketch of drawings are prepared showing details of roads, buildings, trees and other important features surrounding it.

3 PRELIMINARY SURVEYS:

Preliminary Survey is large scale investigation of the result of reconnaissance survey. Their objective is to prepare a plan showing the location & nature of the field. The survey Consists of establishment a base line traverse, which is series of straight alignment. The Physical feature such as building, trees, monuments utilities, railway lines Canals etc. are located. Also the information of ground water level, rainfall intensity, type of the soil, catchment area etc. are collected.

Scanned with CamScanner

PRINCIPAL
Guru Nanak Dev Engg. College, Bidar

GURU NANAK DEV ENGINEERING COLLEGE
BIDAR-585 403
(Affiliated to VTU Belagavi, approved by AICTE)

DEPARTMENT OF CIVIL ENGINEERING

CERTIFICATE

This is to certify that the extensive survey project work is a bonafied work carried out by BATCH A_4 in partial fulfillment for the award of Bachelor of Emgineering in Civil Engineering in GURU NANAK DEV ENGINEERING COLLEGE BIDAR affiliated to Visveshvaraya Technological University, Belgaum during the year 2021-2022. It is certified that all corrections/suggestion indicated for internal assseesment have been in corpareted in the report and a copy of report is deposited in the deparerment library. The project has been approved as it satisfies the academic requiremnets in respect of project work prescribed for said degree.

A_4

SYED BURHAN UDDIN QUADRI	(3GN18CV107)
SYED SAHEEL HUSSAIN	(3GN18CV111)
MANJUNATH KABA	(3GN19CV029)
MD SUFIYAN AHSAN	(3GN19CV036)
MIRZA AZMATULLA BAIG	(3GN19CV037)
MOHAMMED ABDULLAH SHADAN	(3GN19CV038)
MOHAMMED ARBAZ	(3GN19CV039)
MOHAMMED KHAIRULLA	(3GN19CV040)
MOHAMMED ABDUL HAISAFI	(3GN20CV407)
MOHAMMED AZEEM AHMED	(3GN20CV408)
SHAIK MOHAMMED OMAR	(3GN20CV411)
SHAIK SALAUDDIN	(3GN20CV412)

19/07/22

Co-ordinator	Head of the Department	Principal
DR.PM SINGA	DR. B.B KORI	DR. RAVINDRA E.

Examiners

1.

2.

Scanned with CamScanner

PRINCIPAL
Guru Nanak Dev Engg. College, Bidar

INTRODUCTION

1.0 IMPORTANCE OF SURVEYS: -

Before undertaking any project, the first and foremost job is to carry out the survey work of the project area under consideration. Surveying_is the art of determining the relative positions of points on, above or beneath the surface of the earth by means of direct or indirect measurements of distance, direction, and elevation.

For any Engineering Survey the following steps are followed,

1. Map Study
2. Reconnaissance Survey
3. Preliminary Survey
4. Detailed Survey

1. MAP STUDY:

All different possible alignment and nature of the terrain should be studied with the help of available toposheet and map of area.

2. RECONNAISSANCE SUREVY:

Reconnaissance Survey can be defined as an investigation carried out for obtaining details required for the commencement of any project by gathering information about the terrain of the project area. The main objective of this survey is to make preliminary inspection of the area to be surveyed with the view of selection of good station points. And after inspecting the ground, a rough sketch of drawings are prepared showing details of roads, buildings, trees and other important features surrounding it.

3 PRELIMINARY SURVEYS:

Preliminary Survey is large scale investigation of the result of reconnaissance survey. Their objective is to prepare a plan showing the location & nature of the field. The survey Consists of establishment a base line traverse, which is series of straight alignment. The Physical feature such as building, trees, monuments utilities, railway lines Canals etc. are located._Also the information of ground water level, rainfall intensity, type of the soil, catchment area etc. are collected.

Scanned with CamScanner

PRINCIPAL
Guru Nanak Dev Engg. College, Bidar

VISVESVARAYA TECHNOLOGICAL UNIVERSITY

Jnana Sangama, Belgaum – 590014, Karnataka India

GURU NANAK DEV ENGINEERING COLLEGE BIDAR – 585403

DEPARTMENT OF CIVIL ENGINEERING

CERTIFICATE

This is to certify that the project entitled "**EXTENSIVE SURVEY**" is a Bonafide work carried out, in partial fulfillment of requirements for the award of degree of Bachelor of Engineering in Civil Engineering from Visvesvaraya Technological University, Belagavi during the academic year 2021-2022. It is certified that all corrections/suggestions indicated for internal assessment have been incorporated in the report. The activity report has been approved as it satisfies the academic requirements in aspect of activity work prescribed for the Bachelor of Engineering degree.

SUBMITTED BY:-

1. FURQAAN JALEEL AHMED	3GN20CV404
2. SHAIK UBAIDULLAH	3GN18CV095
3. ASLAM KHAN	3GN19CV015
4. AVINASH	3GN19CV016
5. AVISHKAR METRE	3GN19CV017
6. GURUPRASAD	3GN19CV020
7. HRUSHIKESH GADALE	3GN19CV021
8. IMRAN BIN ALI	3GN19CV022
9. JANARDHAN	3GN19CV023
10. SYED SHAZEB	3GN17CV096
11. MOHAMMED OWAIS AHMED	3GN19CV041
12. MOHAMMED SAJEED AHMED	3GN19CV042
13. MOHAMMED OWAIS	3GN18CV060

Project guide	head of department	principal
Prof. **pradeep kumar singa**	**Dr. B.B kori**	**Dr. dhananjay D. maktedar**

PRINCIPAL
Guru Nanak Dev Engg. College, Bidar

Scanned with CamScanner

INTRODUCTION

1.0 IMPORTANCE OF SURVEYS:-

Before undertaking any project, the first and foremost job is to carry out the survey work of the project area under consideration. Surveying_is the art of determining the relative positions of points on, above or beneath the surface of the earth by means of direct or indirect measurements of distance, direction, and elevation.

For any Engineering Survey the following steps are followed,

1. Map Study
2. Reconnaissance Survey
3. Preliminary Survey
4. Detailed Survey

1. MAP STUDY:

All different possible alignment and nature of the terrain should be studied with the help of available toposheet and map of area.

2. RECONNAISSANCE SUREVY:

Reconnaissance Survey can be defined as an investigation carried out for obtaining details required for the commencement of any project by gathering information about the terrain of the project area. The main objective of this survey is to make preliminary inspection of the area to be surveyed with the view of selection of good station points. And after inspecting the ground, a rough sketch of drawings are prepared showing details of roads, buildings, trees and other important features surrounding it.

3 PRELIMINARY SURVEYS:

Preliminary Survey is large scale investigation of the result of reconnaissance survey. Their objective is to prepare a plan showing the location & nature of the field. The survey Consists of establishment a base line traverse, which is series of straight alignment. The Physical feature such as building, trees, monuments utilities, railway lines Canals etc. are located._Also the information of ground water level, rainfall intensity, type of the soil, catchment area etc. are collected.

PRINCIPAL
Guru Nanak Dev Engg. College, Bidar

Scanned with CamScanner

GURU NANAK DEV ENGINEERING COLLEGE
BIDAR-585 403
(Affiliated to VTU Belagavi, approved by AICTE)

DEPARTMENT OF CIVIL ENGINEERING

CERTIFICATE

This is to certify that the **"EXTENSIVE SURVEY"** project work is a bonafied work carried out in partial fulfillment for the award of degree in Bachelor of Engineering in Civil Engineering in GURU NANAK DEV ENGINEERING COLLEGE BIDAR affiliated to Visvesvaraya Technological University, Belagavi during the year 2021-2022. It is certified that all corrections/suggestion indicated for internal assseesment have been incorpareted in the report and a copy of report is deposited in the deparerment library. The project has been approved as it satisfies the academic requiremnets in respect of project work prescribed for said degree.

1. SUDARSHAN JADHAV	3GN18CV102
2. SUMITH	3GN18CV104
3. KAILASH	3GN19CV025
4. MAHADEVAYYA	3GN19CV026
5. MAHESH KUMAR	3GN19CV027
6. MALKANOOR ANKIT	3GN19CV028
7. MD AFROZ ALI BHAGBAN	3GN19CV031
8. MD ASIF	3GN19CV032
9. MD OMER FARAZ	3GN19CV035
10. MIRZA SHAHZAIB ALI BAIG	3GN20CV406
11. MOHD AHSAN ULLAH KHAN	3GN20CV409
12. MOHD SHAKER AHMED	3GN20CV410

P.M. SINGA
Project guide

Dr. B.B. KORI
H.O.D OF CIVIL ENGG. DEPT.

PRINCIPAL
Guru Nanak Dev Engg. College, Bidar

Scanned with CamScanner

INTRODUCTION

1.0 IMPORTANCE OF SURVEYS:-

Before undertaking any project, the first and foremost job is to carry out the survey work of the project area under consideration. Surveying is the art of determining the relative positions of points on, above or beneath the surface of the earth by means of direct or indirect measurements of distance, direction, and elevation.

For any Engineering Survey the following steps are followed,

1. Map Study
2. Reconnaissance Survey
3. Preliminary Survey
4. Detailed Survey

1. MAP STUDY:

All different possible alignment and nature of the terrain should be studied with the help of available toposheet and map of area.

2. RECONNAISSANCE SUREVY:

Reconnaissance Survey can be defined as an investigation carried out for obtaining details required for the commencement of any project by gathering information about the terrain of the project area. The main objective of this survey is to make preliminary inspection of the area to be surveyed with the view of selection of good station points. And after inspecting the ground, a rough sketch of drawings are prepared showing details of roads, buildings, trees and other important features surrounding it.

3 PRELIMINARY SURVEYS:

Preliminary Survey is large scale investigation of the result of reconnaissance survey. Their objective is to prepare a plan showing the location & nature of the field. The survey Consists of establishment a base line traverse, which is series of straight alignment. The Physical feature such as building, trees, monuments utilities, railway lines Canals etc. are located. Also the information of ground water level, rainfall intensity, type of the soil, catchment area etc. are collected.

Scanned with CamScanner

PRINCIPAL
Guru Nanak Dev Engg. College, Bidar

GURU NANAK DEV ENGINEERING COLLEGE
BIDAR-585 403
(Affiliated to VTU Belagavi, approved by AICTE)

DEPARTMENT OF CIVIL ENGINEERING

CERTIFICATE

This is to certify that the **"EXTENSIVE SURVEY"** project work is a bonafied work carried out in partial fulfillment for the award of degree in Bachelor of Engineering in Civil Engineering in GURU NANAK DEV ENGINEERING COLLEGE BIDAR affiliated to Visvesvaraya Technological University, Belagavi during the year 2021-2022. It is certified that all corrections/suggestion indicated for internal assseesment have been incorpareted in the report and a copy of report is deposited in the deparerment library. The project has been approved as it satisfies the academic requiremnets in respect of project work prescribed for said degree.

1. RAVIRAJ MANE	3GN17CV067
2. SANGAMESH	3GN18CV088
3. ABHISHEK BIRADAR	3GN19CV002
4. ABHISHEK M	3GN19CV003
5. AJAY BHAVIKATTE	3GN19CV005
6. AKASH GAYAKWAD	3GN19CV007
7. ANIL KUMAR	3GN19CV009
8. ARVIND	3GN19CV012
9. ABDUL SUFIYAN	3GN20CV400
10. FARHAN AHMED KHAN	3GN20CV403
11. MOHAMMED SOHAIL	3GN19CV043
12. MOHAMMED UMAIS AHMED	3GN19CV045

Dr P.M. SINGA
Project coordinator

Dr. B.B. KORI
H.O.D OF CIVIL ENGG. DEPT.

Scanned with CamScanner

PRINCIPAL
Guru Nanak Dev Engg. College, Bidar

INTRODUCTION

1.0 IMPORTANCE OF SURVEYS:-

Before undertaking any project, the first and foremost job is to carry out the survey work of the project area under consideration. Surveying is the art of determining the relative positions of points on, above or beneath the surface of the earth by means of direct or indirect measurements of distance, direction, and elevation.

For any Engineering Survey the following steps are followed.

1. Map Study
2. Reconnaissance Survey
3. Preliminary Survey
4. Detailed Survey

1. MAP STUDY:

All different possible alignment and nature of the terrain should be studied with the help of available toposheet and map of area.

2. RECONNAISSANCE SUREVY:

Reconnaissance Survey can be defined as an investigation carried out for obtaining details required for the commencement of any project by gathering information about the terrain of the project area. The main objective of this survey is to make preliminary inspection of the area to be surveyed with the view of selection of good station points. And after inspecting the ground, a rough sketch of drawings are prepared showing details of roads, buildings, trees and other important features surrounding it.

3 PRELIMINARY SURVEYS:

Preliminary Survey is large scale investigation of the result of reconnaissance survey. Their objective is to prepare a plan showing the location & nature of the field. The survey Consists of establishment a base line traverse, which is series of straight alignment. The Physical feature such as building, trees, monuments utilities, railway lines Canals etc. are located. Also the information of ground water level, rainfall intensity, type of the soil, catchment area etc. are collected.

Scanned with CamScanner

PRINCIPAL
Guru Nanak Dev Engg. College, Bidar

GURU NANAK DEV ENGINEERING COLLEGE
BIDAR-585 403
(Affiliated to VTU Belagavi, approved by AICTE)

DEPARTMENT OF CIVIL ENGINEERING

CERTIFICATE

This is to certify that the **"EXTENSIVE SURVEY"** project work is a bonafied work carried out in partial fulfillment for the award of degree in Bachelor of Engineering in Civil Engineering in GURU NANAK DEV ENGINEERING COLLEGE BIDAR affiliated to Visvesvaraya Technological University, Belagavi during the year 2021-2022. It is certified that all corrections/suggestion indicated for internal assseesment have been incorpareted in the report and a copy of report is deposited in the deparerment library. The project has been approved as it satisfies the academic requiremnets in respect of project work prescribed for said degree.

1. ASHWINI	3GN18CV021
2. PRIYADARSHINI	3GN18CV082
3. AMRITHA	3GN19CV008
4. ANJALI	3GN19CV010
5. ASHALATA METRE	3GN19CV013
6. ASHWINI KANNA	3GN19CV014
7. JAVERIYA FATIMA	3GN19CV024
8. SOUNDARYA	3GN20CV414
9. VANITHA	3GN20CV417

P.M. SINGA
Project guide

Dr. B.B. KORI
H.O.D OF CIVIL ENGG. DEPT.

PRINCIPAL
Guru Nanak Dev Engg. College, Bidar

Scanned with CamScanner

INTRODUCTION

1.0 IMPORTANCE OF SURVEYS:-

Before undertaking any project, the first and foremost job is to carry out the survey work of the project area under consideration. Surveying is the art of determining the relative positions of points on, above or beneath the surface of the earth by means of direct or indirect measurements of distance, direction, and elevation.

For any Engineering Survey the following steps are followed.

1. Map Study
2. Reconnaissance Survey
3. Preliminary Survey
4. Detailed Survey

1. MAP STUDY:

All different possible alignment and nature of the terrain should be studied with the help of available toposheet and map of area.

2. RECONNAISSANCE SUREVY:

Reconnaissance Survey can be defined as an investigation carried out for obtaining details required for the commencement of any project by gathering information about the terrain of the project area. The main objective of this survey is to make preliminary inspection of the area to be surveyed with the view of selection of good station points. And after inspecting the ground, a rough sketch of drawings are prepared showing details of roads, buildings, trees and other important features surrounding it.

3 PRELIMINARY SURVEYS:

Preliminary Survey is large scale investigation of the result of reconnaissance survey. Their objective is to prepare a plan showing the location & nature of the field. The survey Consists of establishment a base line traverse, which is series of straight alignment. The Physical feature such as building, trees, monuments utilities, railway lines Canals etc. are located. Also the information of ground water level, rainfall intensity, type of the soil, catchment area etc. are collected.

PRINCIPAL
Guru Nanak Dev Engg. College, Bidar

Scanned with CamScanner

GURU NANAK DEV ENGINEERING COLLEGE

BIDAR-585403, KARNATAKA

DEPARTMENT OF MECHANICAL ENGINEERING

CERTIFICATE

This is certified that the miniproject work entitled a bonafide work carried out by MOHAMMED YOUSUF PATEL (3GN19ME024), MD TANVEER (3GN19ME017), RAGHAVENDRA REDDY (3GN19ME030) in partial fulfillment for the award of Bachelor of Engineering in MECHANICAL ENGINEERING from **Visvesvaraya Technological University, Belagavi during the year 2021-2022.** It is certified that all corrections/suggestions indicated for Internal Assessment have been incorporated in the Report deposited in the departmental library. The project report has been approved as it satisfies the academic requirements in respect of Project work prescribed for the said Degree.

Signature of the Guide	Signature of the HOD	Signature of Principal
PROF.SHIVSHANKAR .C	PROF. K.K. PRASAD	DR.DHANANJAY D MUKTEDAR

External Viva
Name of the examiners

(1) .....

(2) .....

Signature with date

.....

.....

PRINCIPAL
Engg. College, Bidar

ABSTRACT

The objective of this project is to design and manufacture the instrument which can measure geometrical parameters (length, width, height) of component without using traditional or current measuring techniques. This instrument has various advantages over the traditional measuring instruments.it has less moving parts and requires less physical efforts to operate it. The instrument consists of most crucial part known as ultrasonic sensor, a circuit which is used to control the various components knows as Arduino and set of wiresMotion detection has become one of the great areas of research in the world. Many activities are carried out in the presence of motion. One of the research focus has been the use of Arduino Uno microcontroller, Ultrasonic sensor and many others to sense and measure distances. The goal is to measure and monitor human activity remotely, and using less manpower as much as possible. This study aimed at designing a sensor that can easily measure how far the object is, monitor change of distances as the object approach and give a light coded signal and a sound alarm. The hardware utilized included the Arduino Uno on a bread board interfaced with LEDs and Ultrasonic sensor. The program to run the circuit was developed using Arduino Uno and stored at the memory of the Arduino microcontroller. The study demonstrated that the designed sensor could be used to accurately determine the position of an approaching object and Simultaneously the sensor display visual LED signals set and color coded as for instance, distances less than 150 cm, 70 cm and 40cm corresponding to Green, Blue and Red LED lights respectively, while at the same time producing sound signals . Thus, this method of distance sensing and measurement is efficient and assures measurements of small distances precisely. This distance sensing and measurement system can get wide applications where proximity detection is required e.g. in industries and traffic departments.

PRINCIPAL
Guru Nanak Dev Engg. College, Bidar

BIDAR-585403(KARNATAKA)

GURU NANAK DEV ENGINEERING COLLEGE

BIDAR-585403, KARNATAKA

DEPARTMENT OF MECHANICAL ENGINEERING

CERTIFICATE

This is certified that the mini-project work entitled INTERFACING OF DC MOTOR WITH ARDUINO bonafide work carried out by SIDDRAJ(3GN19ME038), SAINATH(3GN18ME054), SAGAR(3GN19ME031) SANGAMESHWAR(3GN19ME033) in partial fulfillment for the award of Bachelor of Engineering in **MECHANICAL ENGINEERING** from **Visvesvaraya Technological University, Belagavi during the year 2021-2022**. It is certified that all corrections/suggestions indicated for Internal Assessment have been incorporated in the Report deposited in the departmental library. The project report has been approved as it satisfies the academic requirements in respect of Project work prescribed for the said Degree Name & Signature of the Name & Signature of the Name &Signature

Guide	HOD	Principal
DR. NAGRAJ R.G.	PROF. K.K. PRASAD	DR. DHANANJAY D MUKTEDAR

External Viva
Name of the examiners

Signature with date

(1). Dr. Sanjay Patil

(2). Dr. Nagraj R.G.

28/7/22

28/7

PRINCIPAL
Guru Nanak Dev Engg. College, Bidar

ABSTRACT

This work presents a simple speed control application for a DC motor in laboratory use. The purpose of this application is to maintain the desired speed on a generator operating on the same axis to the motor. One small laboratory DC machines of 1kw and 300W nominal power have been used for testing the controller. Close loop control has been applied by using appropriate speed encoder. The controller functions as a DC chopper and PWM signal is produced by an Arduino UNO controller. The nominal input voltage was 200Volt, so igbt switching devices were used. There are over voltage and over current protections and, moreover, a mode without speed metering is available (open loop control scheme). A detailed analysis is provided on the equipment and the techniques that have been used for the control of the power electronic device. The scope of this work was to plan and test the controller, in terms of energy efficiency and economical operation. This study presents the critical results of the tests focusing on the best operational point and discusses the related conclusions. The controller's operation was efficient in both low and high speeds that were tested.

PRINCIPAL
Nanak Dev Engg. College, Bidar

GURU NANAK DEV ENGINEERING COLLEGE
BIDAR-585403, KARNATAKA

DEPARTMENT OF MECHANICAL ENGINEERING

CERTIFICATE

This is certified that the Mini-project work entitled "(INTERACTION WITH ARDUINO UNO & CONTROLLING SPEED OF DC MOTOR WITH NPN TRANSISTOR)" A bonafide work carried out by PREMDEEPA (3GN20ME405),HRITIK (3GN18ME018), MANOJ (3GN18ME028), AVINASH (3GN18ME012),in partial fulfillment for the award of Bachelor of Engineering in MECHANICAL ENGINEERING from **Visvesvaraya Technological University, Belagavi during the year 2021-2022**. It is certified that all corrections/suggestions indicated for Internal Assessment have been incorporated in the Report deposited in the departmental library. The project report has been approved as it satisfies the academic requirements in respect of Project work prescribed for the said Degree.

Guide
Prof. DIGAMBAR BENNE.

co-ordinator
Dr.NAGARAJ .G

HOD
Prof. K.K. PRASAD

Principal
Dr. DHANANJAY .D.MUKTEDAR

External Viva

Name of the examiners

1) Shivakumar

2) B. Ramreddy

Signature with date

PRINCIPAL
Guru Nanak Dev Engg. College, Bidar

ABSTRACT

This work presents a simple speed control application for a DC motor in laboratory use. The purpose of this application is to maintain the desired speed on a generator operating on the same axis to the motor.

Two small laboratory DC machines of 1kw and 300W nominal power have been used for testing the controller. Close loop control has been applied by using appropriate speed encoder. The controller functions as a DC chopper and PWM signal is produced by an Arduino UNO controller. The nominal input voltage was 200Volt, so igbt switching devices were used.

There are over voltage and over current protections and, moreover, a mode without speed metering is available (open loop control scheme).

A detailed analysis is provided on the equipment and the techniques that have been used for the control of the power electronic device. The scope of this work was to plan and test the controller, in terms of energy efficiency and economical operation.

This study presents the critical results of the tests focusing on the best operational point and discusses the related conclusions. The controller's operation was efficient in both low and high speeds that were tested.

PRINCIPAL
Guru Nanak Dev Engg. College, Bidar

GURU NANAK DEV ENGINEERING COLLEGE

BIDAR-585403, KARNATAKA

DEPARTMENT OF MECHANICAL ENGINEERING

CERTIFICATE

This is certified that theminiproject work entitled "INTERFACING SINGLE LED WITH ARDUINO UNO" a bonafide work carried out bySAI KRISHNA (3GN19ME032), PRASHANT (3GN19ME029), SAWALE SHUBHAM (3GN19ME034), CHRIS WILLIAM (3GN19ME006)in partial fulfillment for the award of Bachelor of Engineering in MECHANICAL ENGINEERING from **Visvesvaraya Technological University, Belagavi during the year 2022-2022.** It is certified that all corrections/suggestions indicated for Internal Assessment have been incorporated in the Report deposited in the departmental library. The project report has been approved as it satisfies the academic requirements in respect of Project work prescribed for the said Degree.

Name & Signature of the Guide	Name & Signature of the HOD	Name &Signature of the Principal
28/7/22	29/7	
Dr. Sangmesh Sirsgi	Prof. K.K. Prasad	Dr.Dhananjay Mukteder

External Viva
Name of the examiners

Signature with date

(1)..... 28/7

(2)..... 28/7

PRINCIPAL
Guru Nanak Dev Engg. College, Bidar

ABSTRACT

It is the simple basic project created using Arduino. LED (Light Emitting Diode) is an electronic device, which emits light when the current passes through its terminals. LED's are used in various applications. It is also used as an ON/OFF indicator in different electronic devices.

In this project, we will connect the LED to the digital pin on the Arduino board. The LED will work as a simple light that can be turned ON and OFF for a specified durations

Arduino is an open-source hardware and software company, project, and user community that designs and manufactures single-board microcontrollers and microcontroller kits for building digital devices. Its hardware products are licensed under a CC BY-SA license, while software is licensed under the GNU Lesser General Public License (LGPL) or the GNU General Public License (GPL),permitting the manufacture of Arduino boards and software distribution by anyone. Arduino boards are available commercially from the official website or through authorized distributors

Arduino board designs use a variety of microprocessors and controllers. The boards are equipped with sets of digital and analog input/output (I/O) pins that may be interfaced to various expansion boards ('shields') or breadboards (for prototyping) and other circuits. The boards feature serial communications interfaces, including Universal Serial Bus (USB) on some models, which are also used for loading programs.

The microcontrollers can be programmed using the C and C++ programming languages, using a standard API which is also known as the Arduino language, inspired by the Processing language and used with a modified version of the Processing IDE. In addition to using traditional compiler toolchains, the Arduino project provides an integrated development environment (IDE) and a command line tool developed in Go.

The name Arduino comes from a bar in Ivrea, Italy, where some of the founders of the project used to meet. The bar was named after Arduin of Ivrea, who was the margrave of the March of Ivrea and King of Italy from 1002 to 1014.

PRINCIPAL
Dev Engg. College, Bidar

GURU NANAK DEV ENGINEERING COLLEGE

BIDAR-585403, KARNATAKA

DEPARTMENT OF MECHANICAL ENGINEERING

CERTIFICATE

Certify that the Mini project work entitled a bonafide work carried out by ABHISHEK PASARGI (3GN20ME400), IMRAN (3GN20ME402), MIRZA HUMAID BAIG (3GN20ME403), RASHED ALI (3GN20ME407) in partial fulfilment for the award of Bachelor of Engineering in MECHANICAL ENGINEERING from **Visvesvaraya Technological University, Belagavi during the year 2021-2022**. It is certified that all corrections/suggestions indicated for Internal Assessment have been incorporated in the Report deposited in the departmental library. The project report has been approved as it satisfies the academic requirements in respect of Mini Project work prescribed for the said Degree.

Name & Signature of the Guide	Name & Signature of the HOD	Name &Signature of the Principal
PROF. RAM REDDY	PROF. K.K. PRASAD	DR. DHANANJAY D MUKTEDAR PRINCIPAL Guru Nanak Dev Engg. College BIDAR

External Viva

Name of the examiners		**Signature with date**
Dr. Sanjay Patil	1.	28/7/22
Dr. Nagraj. R. G	2.	28/7

PRINCIPAL
Guru Nanak Dev Engg. College, Bidar

ABSTRACT

This paper explores the working principle and applications of an Arduino board. This also explores on how it can be used as a tool for study and research works. Arduino board can provide a quick tool in development of VLSI test bench especially of sensors. Main advantages are fast processing and easy interface. Today, with increasing number of people using open-source software and hardware devices day after day, technology is forming a new dimension by making complicated things look easier and interesting. These open sources provide free or virtually low costs, highly reliable and affordable technology. This paper provides a glimpse of type of Arduino boards, working principles, software implementation and their applications.

Design of Traffic Light Control system using Arduino. In this project we will be using a set of lights and a push button. It will direct us for the crossing of road. Basically, we are designing a set of traffic Light system using Arduino board model R3 connecting breadboard with it and by programming the Arduino. The Arduino will be helping us to direct the cars when to be stopped by showing red light or turning on Red LED, and when the cars are set to go, by turning Green LED on. Arduino will tell us to do something when we change the state of the buttons, and that the Arduino is watching we can press the button to functions in code.

PRINCIPAL
Guru Nanak Dev Engg. College, Bidar

GURU NANAK DEV ENGINEERING COLLEGE BIDAR-585403, KARNATAKA

DEPARTMENT OF MECHANICAL ENGINEERING

CERTIFICATE

Certified that the Mini project entitled **"INTERFACING ULTRASONIC SENSOR WITH ARDUINO UNO"** a bonafide work carried out by **SHAIK MISBAUDDIN (3GN19ME035)**, **SHAIK SHAFI AHMED (3GN19ME036)**, **MD ISMAIL (3GN19ME014)**, **MD SADIQ AMAAN (3GN19ME015)** Students of **GURU NANAK DEV ENGINEERING COLLEGE**, **BIDAR** in partial fulfillment of the requirements for the award of the degree of Bachelor of Engineering in **MECHANICAL ENGINEERING** from **Visvesvaraya Technological university, Belagavi during the year 2021-22**. The Mini project report satisfies the academic requirements.

Signature of Guide 26/7/22	Signature of HOD	Signature of Principal
Dr. RAJENDRA MOGRE	PROF. K.K. PRASAD	

PRINCIPAL
Guru Nanak Dev Engg. College, Bidar

ABSTRACT

The objective of this project is to design and manufacture the instrument which can measure geometrical parameters (length, width, height) of component without using traditional or current measuring techniques. This instrument has various advantages over the traditional measuring instruments.it has less moving parts and requires less physical efforts to operate it. The instrument consists of most crucial part known as ultrasonic sensor, a circuit which is used to control the various components knows as Arduino and set of wiresMotion detection has become one of the great areas of research in the world. Many activities are carried out in the presence of motion. One of the research focus has been the use of Arduino Uno microcontroller, Ultrasonic sensor and many others to sense and measure distances. The goal is to measure and monitor human activity remotely, and using less manpower as much as possible. This study aimed at designing a sensor that can easily measure how far the object is, monitor change of distances as the object approach and give a light coded signal and a sound alarm. The hardware utilized included the Arduino Uno on a bread board interfaced with LEDs and Ultrasonic sensor. The program to run the circuit was developed using Arduino Uno and stored at the memory of the Arduino microcontroller. The study demonstrated that the designed sensor could be used to accurately determine the position of an approaching object and Simultaneously the sensor display visual LED signals set and color coded as for instance, distances less than 150 cm, 70 cm and 40cm corresponding to Green, Blue and Red LED lights respectively, while at the same time producing sound signals . Thus, this method of distance sensing and measurement is efficient and assures measurements of small distances precisely. This distance sensing and measurement system can get wide applications where proximity detection is required e.g. in industries and traffic departments.

PRINCIPAL
Guru Nanak Dev Engg. College, Bidar

PRINCIPAL
Guru Nanak Dev Engg. College, Bidar

GURU NANAK DEV ENGINEERING COLLEGE

BIDAR-585403 , KARNATAKA

DEPARTMENT OF MECHANICAL ENGINEERING

CERTIFICATE

Certified that the Mini project entitled "STEPPER MOTOR CONTROL WITH ARDUINO UNO", a bonafide work carried out by MD FURQUAN AHMED (3GN19ME020), M.A RAZZAK (3GN19ME012) , MD AKIF QASAB (3GN19ME013) , SHAIK YASER PATEL (3GN19ME037) Students of GURU NANAK DEV ENGINEERING COLLEGE , BIDAR in partial fulfillment of the requirements for the award of the degree of Bachelor of Engineering in MECHANICAL ENGINEERING from Visvesvaraya Technological university, Belagavi during the year 2021-22. The Mini project report satisfies the academic requirements.

Signature of Guide	Signature of HOD	Signature of Principal
Dr. ANOOP KUMAR ELIA	PROF. K.K. PRASAD	Dr. DHANANJAY D

PRINCIPAL

Guru Nanak Dev Engg. College, Bidar

ABSTRACT

This project presents the design of automatic PCB drilling machine. The design of low cost automatic PCB drilling machine is used to reduce cost, man power and increase accuracy, productivity. The aim of this project is to implement and develop a low cost PCB drilling machine based on Arduino controller, where the drill holes are automatically detected from a PCB layout. The main challenging task is to find the drill hole coordinate from PCB layout. G code software is used in this system. this work is operate the CNC machine G code is a standard machine language.

Key Words: — Arduino controller, stepper motor and stepper motor driver A4988

PRINCIPAL
Guru Nanak Dev Engg. College, Bidar

GURU NANAK DEV ENGINEERING COLLEGE

BIDAR-585403, KARNATAKA

DEPARTMENT OF MECHANICAL ENGINEERING

CERTIFICATE

This is certified that the miniproject work entitled a bonafide work carried out by ARUNKUMAR (3GN19ME004), DATTAKUMAR (3GN19ME007), GANESH (3GN19ME008), KEDARNATH (3GN19ME010), in partial fulfillment for the award of Bachelor of Engineering in MECHANICAL ENGINEERING from Visvesvaraya Technological University, Belagavi during the year 2021-2022. It is certified that all corrections/suggestions indicated for Internal Assessment have been incorporated in the Report deposited in the departmental library. The project report has been approved as it satisfies the academic requirements in respect of Project work prescribed for the said Degree.

Name & Signature of the Guide	Name & Signature of the HOD	Name &Signature of The Co-ordinator
PROF. ANIL JADHAV	PROF. K.K PRASAD	DR. NAGARAJ R.G

EXTERNAL VIVA

NAME OF EXAMINERS	SIGNATURE WITH DATE
1) Shivakumar	
2) Parmeshwar	

PRINCIPAL

Guru Nanak Dev Engineering

ABSTRACT

Various wearable computing devices face problems with their power supplies, communication channels, and placement. Conductive cloths can resolve these problems, but it is still difficult to know the positions of devices on the conductive fabric. Therefore, we have devised a method to detect the positions of such devices by using a camera. To detect the positions our method blinks the LEDs on the devices according to their ID. Additionally, we propose several methods to shorten the time for detection. An experimental evaluation confirmed that compared with conventional method our methods reduce the time to detect the positions of the devices.

PRINCIPAL
Dev Engg. College, Bidar

GURU NANAK DEV ENGINEERING COLLEGE

BIDAR-585403, KARNATAKA

DEPARTMENT OF MECHANICAL ENGINEERING

CERTIFICATE

This is certified that the mini-project work entitled "INTERFACING SERVO MOTOR WITH ARDUINO UNO" a bonafide work carried out by CHANDRAKANTH SWAMY (3GN18ME014), D YELLESH (3GN18ME016), SACHIN (3GN18ME052), AKILESH (3GN18ME008) in partial fulfillment for the award of Bachelor of Engineering in MECHANICAL ENGINEERING from **Visvesvaraya Technological University, Belagavi during the year 2021-2022**. It is certified that all corrections/suggestions indicated for Internal Assessment have been incorporated in the Report deposited in the departmental library. The project report has been approved as it satisfies the academic requirements in respect of Project work prescribed for the said Degree.

Name & Signature of the Guide	Name & Signature of the HOD	Name &Signature of the Principal
PROF K.K. PRASAD	PROF. K.K. PRASAD	PROF. DR .DHANANJAY MUKTEDAR

Viva

Name of the examiners

Signature with date

(1) Dr. Sanjay Patil

2) Dr. Nagraj. R.G

24/8/21

PRINCIPAL
Guru Nanak Dev Engg. College, Bidar

ABSTRACT

There are some special types of application of electrical motor where rotationof the motor is required for just a certain angle not continuously for long period of time. For these applications, some special types of motor are required with some special arrangement which makes the motor to rotate a certain angle for a given electrical input (signal). This is normally a simple motor which is controlled for specific angular rotation with the help of additional servomechanism (a typical closed loop feedback control system). Servo motor is a special type of motor which is automatically operated up to certain limit for a given command with help of error-sensing performance.

PRINCIPAL
Guru Nanak Dev Engg. College, Bidar

GURU NANAK DEV ENGINEERING COLLEGE

BIDAR-585403 , KARNATAKA

DEPARTMENT OF MECHANICAL ENGINEERING

CERTIFICATE

Certified that the Mini project entitled **"SERVO MOTOR CONTROL WITH ARDUINO UNO"** a bonafide work carried out by **MD YAQUB IRSHAD (3GN19ME019) , MOHD AMAAN KASHIF (3GN19ME025) , MD UMAIR ALLTAMASH (3GN19ME018) , MOHAMMED IRFAN KHAN(3GN19ME021)** Students of **GURU NANAK DEV ENGINEERING COLLEGE , BIDAR** in partial fulfillment of the requirements for the award of the degree of Bachelor of Engineering in **MECHANICAL ENGINEERING** from **Visvesvaraya Technological university, Belagavi during the year 2021-22.** The Mini project report satisfies the academic requirements.

Signature of Guide	Signature of HOD	Signature of Principal
PROF. MD Q RAHAMAN	PROF. K.K. PRASAD	Dr. DHANANJAY D MUKTEDAR

PRINCIPAL

Guru Nanak Dev Engg. College, Bidar

ABSTRACT

we are going to **control a servo motor by ARDUINO UNO**. Servo Motors are used where there is a need for accurate shaft movement or position. These are not proposed for high speed applications. These are proposed for low speed, medium torque and accurate position application. These motors are used in robotic arm machines, flight controls and control systems.

SERVO MOTOR are available at different shapes and sizes. A servo motor will have mainly there wires, one is for positive voltage another is for ground and last one is for position setting. The RED wire is connected to power, Black wire is connected to ground and YELLOW wire is connected to signal.

A servo motor is a combination of DC motor, position control system, gears. The position of the shaft of the DC motor is adjusted by the control electronics in the servo, based on the duty ratio of the PWM signal the SIGNAL pin.

Simply speaking the control electronics adjust shaft position by controlling DC motor. This data regarding position of shaft is sent through the SIGNAL pin. The position data to the control should be sent in the form of PWM signal through the Signal pin of servo motor.

The frequency of PWM (Pulse Width Modulated) signal can vary based on type of servo motor. The important thing here is the DUTY RATIO of the PWM signal. Based on this DUTY RATION the control electronics adjust the shaft.

As shown in figure below, for the shaft to be moved to 9o clock the TURN ON RATION must be 1/18.ie. 1ms of ON time and 17ms of OFF time in a 18ms signal.

Be able to identify characteristics that distinguish a servo and a DC motor

Be able to describe the difference a conventional servo and a continuous rotation servo

Be able to use the Arduino Servo library to control servo position

PRINCIPAL
Guru Nanak Dev Engg. College, Bidar

GURU NANAK DEV ENGINEERING COLLEGE
BIDAR-585403 , KARNATAKA

DEPARTMENT OF MECHANICAL ENGINEERING

CERTIFICATE

Certified that the Mini project entitled IR SENSOR (INFRARED PROXIMITY) SENSORS a bonafide work carried out by KUSHAL SINGH (3GN19ME009) ARJUN M JADHAV (3GN19ME003) & M MAHESH (3GN19ME011) OF SIXTH SEM Students of **GURU NANAK DEV ENGINEERING COLLEGE , BIDAR** in partial fulfillment of the requirements for the award of the degree of Bachelor of Engineering in **MECHANICAL ENGINEERING** from **Visvesvaraya Technological university, Belagavi during the year 2021-22.** The Mini project report satisfies the academic requirements.

SIGNATURE OF GUIDE	SIGNATURE OF HOD	SIGNATURE OF COORDINATOR
PROF.GANGADHAR.BIRADAR	PROF. K.K. PRASAD	DR. NAGRAJ R G

1) Shivakumar
2) D. Ramreddy

PRINCIPAL
Engg. College, Bidar

INTRODUCTION

An **infrared proximity sensor or IR Sensor** is an electronic device that emits infrared lights to sense some aspect of the surroundings and can be employed to detect the motion of an object. As this is a passive sensor, it can only measure infrared radiation. This sensor is very common in the electronic industry and if you've ever tried to design an obstacle avoidance robot or any other proximity detection-based system, chances are you already know about this module, and if you don't, then follow this article as here we will discuss everything about it.

IR Sensor

The IR sensor has a 3-pin connector that interfaces it to the outside world. The connections are as follows:

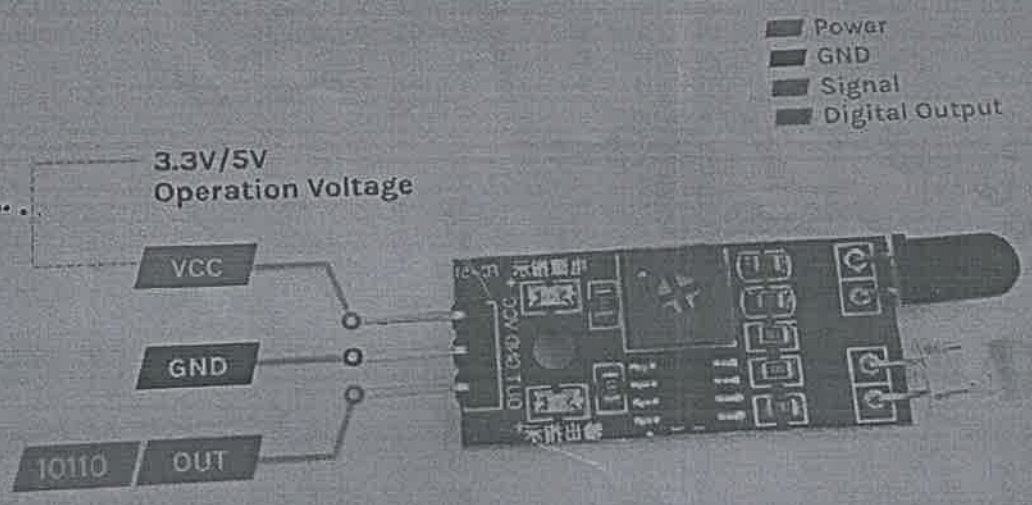

VCC is the power supply pin for the IR sensor which we connect to the 5V pin on the Arduino.

OUT pin is a 5V TTL logic output. LOW indicates no motion is detected; HIGH means motion is detected.

GND Should be connected to the ground of the Arduino.

PRINCIPAL
Guru Nanak Dev Engg. College, Bidar

BIDAR-585403, KARNATAKA

DEPARTMENT OF MECHANICAL ENGINEERING

CERTIFICATE

This is certified that the Mini-project work entitled INTERACTION WITH ARDUINO UNO & CONTROLLING SPEED OF DC MOTOR WITH LDR(Light -dependent resistor) A bonafide work carried out by ASHWINI (3GN19ME005), PAVAN (3GN20ME404), PREMKUMAR (3GN20ME406), VEERESH (3GN20ME408), in partial fulfillment for the award of Bachelor of Engineering in MECHANICAL ENGINEERING from **Visvesvaraya Technological University, Belagavi during the year 2021-2022.** It is certified that all corrections/suggestions indicated for Internal Assessment have been incorporated in the Report deposited in the departmental library. The project report has been approved as it satisfies the academic requirements in respect of Project work prescribed for the said Degree.

Name & Signature of the Guide	Name & Signature of the HOD	Name & Signature of the PRINCIPAL
SHIVASHANKAR B.C.	PROF. K.K. PRASAD	DR. RAVINDRA EKLARKAR
	HEAD OF DEPARTMENT Mechanical Engineering Guru Nanak Dev Engineering College BIDAR-585 403 (Karnataka)	Guru Nanak Dev Engg. College, Bidar

External Viva
Name of the examiners

Signature with date

(1) Dr. Sanjay Patil 28/7/22

(2) Dr. Nagraj R.G. 28/7

PRINCIPAL
Guru Nanak Dev Engg. College

INTRODUCTION

In this Arduino project, we are going to build an automatic Speed Controller of DC Motor using LDR with Arduino. This LDR based Arduino project slows down the speed of Motor as the intensity of light falling on LDR decreases and vice versa. **"Arduino Project| Motor speed control using LDR with Arduino"**

Working of LDR based motor speed control Arduino Project:

1. When light falls on LDR, the resistance of LDR changes. This change in resistance causes a change in voltage drop across LDR. Now since potentiometer is connected in series with LDR i.e. to Analog pin A0 to Ground, the voltage drop across it also changes. This change in voltage drop is received by Analog pin A0 in the form of analog value anywhere between 0 and 1023.

2. This received analog value is then converted to PWM value between 0 and 255 by Arduino using this piece of code:

y= map (x, 0, 1023, 0,255); // Mapping or converting the value bw minimum to maximum analog value to the corresponding pwm value

3. This PWM value is now given to the digital pin 6 initialized as an output pin and connected to the base of the transistor.

4. The code used to write this PWM value to pin 6 is:

PRINCIPAL
Guru Nanak Dev Engg. College, Bidar

GURU NANAK DEV ENGINEERING COLLEGE,

BIDAR-585403, KARNATAKA

DEPARTMENT OF MECHANICAL ENGINEERING

CERTIFICATE

This is to certify that the mini project work entitled "INTERFACE SOUND SENSOR WITH ARDUINO UNO" is a bonafide work carried out by JIBRAN MOHAMMED (3GN18ME020), MD SHADAB PATEL (3GN19ME016), DANISH AHMED KHAN (3GN20ME401) in partial fulfilment of the requirements for the Bachelor's degree in MECHANICAL Engineering of the Visvesvaraya Technological University, Belagavi during the academic year 2021-2022.

.....

Signature of Guide
Prof. SANJAY PATIL

.....

Signature of HOD
Prof. PRASAD KRISHNAN

.....

Signature of Principle
Dr. DHANANJAY D MUKTEDAR

EXTERNAL VIVA:

Examiners: 1) Dr. Sanjay Patil 2) Dr. Nagraj R.G.

PRINCIPAL
Guru Nanak Dev Engg. College, Bidar

ntroduction

this project, I will be using a different Sound Sensor (although the idea is the same), which sensitive to sounds like loud voices, claps, snaps, thuds and taps.

/e live in a World of virtual assistants with voice interactions and they even make your aircut appointments!

nterfacing Sound Sensor with Arduino – Add Sound Detection to Arduino

this project, we will learn about a new Sensor called Sound Sensor or Sound Detector. lso, I will show you how to interface a Sound Sensor with Arduino and implement a Relay ontrol project using Arduino, Sound Sensor and a Relay Module.

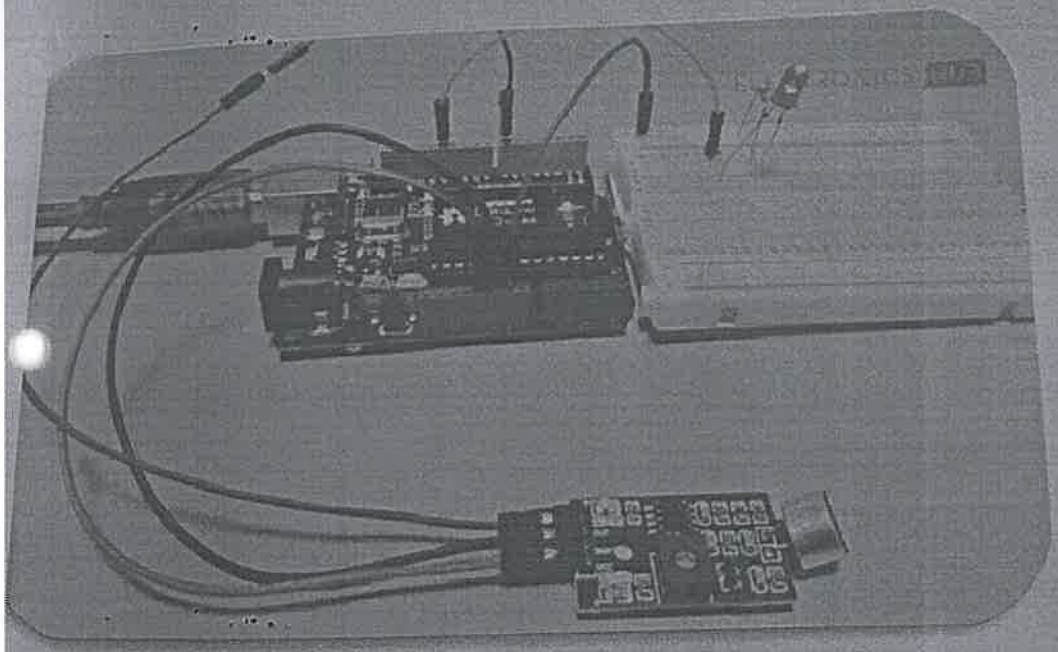

PRINCIPAL
G... Nanak Dev Engg. College

GURU NANAK DEV ENGINEERING COLLEGE

BIDAR-585403 , KARNATAKA

DEPARTMENT OF MECHANICAL ENGINEERING

CERTIFICATE

Certified that the Mini project entitled **"IR SENSOR WITH ARDUINO UNO"** a bonafide work carried out by **MOHD ASIFUDDIN (3GN19ME026) , MOHAMMED JAWAD (3GN19ME022) , MOHAMMED RIZWAN KHAN (3GN19ME023) , MOHD FAIZAN AHMED (3GN19ME027)** Students of **GURU NANAK DEV ENGINEERING COLLEGE , BIDAR** in partial fulfillment of the requirements for the award of the degree of Bachelor of Engineering in **MECHANICAL ENGINEERING** from **Visvesvaraya Technological university, Belagavi during the year 2021-22**. The Mini project report satisfies the academic requirements.

Signature of Guide	Signature of HOD	Signature of Principal
PROF. PARMESHWAR PATIL	PROF. K.K. PRASAD	Dr. DHANANJAY D MUKTEDAR

PRINCIPAL
Guru Nanak Dev Engg. College, Bidar

INTRODUCTION

An infrared proximity sensor or IR Sensor is an electronic device that emits infrared lights to sense some aspect of the surroundings and can be employed to detect the motion of an object. As this is a passive sensor, it can only measure infrared radiation. This sensor is very common in the electronic industry and if you've ever tried to design an obstacle avoidance robot or any other proximity detection-based system, chances are you already know about this module, and if you don't, then follow this article as here we will discuss everything about it.

IR Sensor

The IR sensor has a 3-pin connector that interfaces it to the outside world. The connections are as follows:

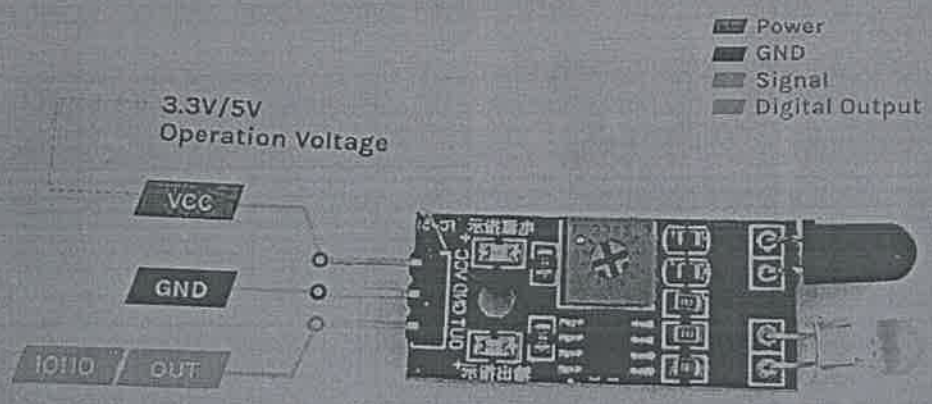

VCC is the power supply pin for the IR sensor which we connect to the 5V pin on the Arduino.

OUT pin is a 5V TTL logic output. LOW indicates no motion is detected; HIGH means motion is detected.

GND Should be connected to the ground of the Arduino.

PRINCIPAL
Guru Nanak Dev Engg. College, Bidar

VISVESVARAYA TECHNOLOGICAL UNIVERSITY, BELAGAVI

GURU NANAK DEV ENGINEERING COLLEGE

BIDAR-585403, KARNATAKA

ACADEMIC YEAR 2021-2022

DEPARTMENT OF ELECTRICAL & ELECTRONICS ENGINEERING

CERTIFICATE

This is to certify that the Mini project report entitled "**DIGITAL TACHOMETER**" is a bonafide work carried out by **MD SOHAIL KHAN (3GN19EE010), SHAIK MUZAFFER (3GN19EE024), SARDAR NAVJEET SINGH (3GN20EE404), R NAGA SUJEET JOSHI (3GN20EE403)**. In partial fulfillment for the award of Bachelor of Engineering **in ELECTRICAL&ELECTRONICS ENGINEERING** from the Visvesvaraya Technological University, Belagavi During the year 2021-2022.It is certified that the mini project Report satisfies the academic requirement in respect of mini project work prescribed for the Bachelor of Engineering degree.

Signature of Guide	Signature of HOD	Signature of Principal
Prof. PRAKASH UDGIRE	**Dr. NEELSHETTY K**	**DR.DHANNJAY D MUKTEDAR**
		PRINCIPAL
		Guru Nanak Dev Engg. College BIDAR

NAME OF EXAMINERS

1. SHUBHA.S
2. G. Prashant

SIGNATURE WITH DATE

1. SK 25/07/2022
2. 25/07/22

PRINCIPAL
Guru Nanak Dev Engg. College, Bidar

ABSTRACT

A **"DIGITAL TACHOMETER"** made purely from electronic components and is used to measure the speed of an engine or any other moving object in revolutions per minute and is also known as an electronic tachometer. Electronic tachometers are used in the dashboard of a car for measuring the driving speed. These tachometers are light weight, easy to view and accurate under all conditions. They are usually not portable .A Digital RPM Meter is a measuring instrument which can measure the rotational speed of a rotary machine digitally. In industries we can use this type of digital tachometers which will reduce human effect. The industrial name of this instrument is "Tachometer". It is an important measuring device in the field of electrical engineering & widely used in industries and laboratorial work. Here we are going to design an Aurdino based digital tachometer using IR sensor module to detect object for count rotation of any rotating body and the programming is given by the FTDI programmer. As IR transmits IR rays which reflect back to IR receiver and then IR Module generates an output or pulse which is detected by the aurdino controller when we press start button. It counts continuously for 5 seconds.

PRINCIPAL
Guru Nanak Dev Engg. College, Bidar

GURU NANAK DEV ENGINEERING COLLEGE, BIDAR-585403, KARNATAKA

DEPARTMENT OF

ELECTRICAL AND ELECTRONICS ENGINEERING

CERTIFICATE

This is to certify that the Mini project report entitled "SMART BUILDING USING IR SENSOR" is a bona fidework carried out by VIJAYLAXMI(3GN19EE037),SOUMYA(3GN19EE028), SWATI(3GN19EE031), TABASSUM(3GN19EE033). In practical fulfillment for the award of Bachelor of Engineering in ELECTRICAL & ELECTRONICS ENGINEERING from the Visvesvaraya Technological University, Belagavi During the year 2021-2022.It is certified that the mini project Report satisfies the academic requirement in respect of seminar work prescribed for the Bachelor of Engineering degree.

Signature of Guide	Signature of HOD	Signature of Principal
Mrs. SHUBHA KULKARNI	Dr. NEELSHETTY.K	Dr. DHANANJAY D M PRINCIPAL Guru Nanak Dev Engg. College BIDAR

Name of the Examiner **Signature with Date**

1. SHUBHA.S 25/07/2022
2. G. Prakash 25/07/22

PRINCIPAL
Guru Nanak Dev Engg. College, Bidar

ABSTRACT

The "Smart building" concept is based on embedded system and IoT (Internet of Things) Technology. The presented model includes different features using which we can automate various tasks in our workplaces. The smart lighting system activate according to the natural light intensity available and human presence in the building. Smart Dustbins, which require less maintenance by opening when it detects human. Smart Watering systems help in the maintenance of lawns by measuring the soil moisture content. Earthquake detection module is use to warn about an earthquake and other seismic activities. The smart building concept is successfully designed using Arduino and Thing speak server is used for analyze the data.

PRINCIPAL
Guru Nanak Dev Engg. College, Bidar

GURU NANAK DEV ENGINEERING COLLEGE, BIDAR-585403, KARNATAKA

DEPARTMENT OF ELECTRICAL AND ELECTRONICS ENGINEERING

CERTIFICATE

This is to certify that the Mini project report entitled **"ANTI–SLEEP ALARM USING ARDUINO"** is a bonafide work carried out by **TEJASWINI PATIL (3GN18EE047) VAISHNAVI KORE (3GN18EE049), ROHAN. C (3GN19EE018), SHUBHANSHU (3GN19EE025)**, in partial fulfillment for the award of Degree of Bachelor of Engineering in ELECTRICAL & ELECTRONICS ENGINEERING from the Visvesvaraya Technological University, Belagavi during the academic year 2021-2022. It is certified that the mini project report satisfies the academic requirement in respect of the mini project work prescribed for the Bachelor of Engineering degree.

Signature of Guide	Signature of HOD	Signature of Principal
Mrs. MEGHA	Dr. NEELSHETTY. K	Dr. DHANANJAYA MUKTEDAR

PRINCIPAL
Guru Nanak Dev Engg. College
BIDAR

Name of the Examiner

1). SHUBHA S
2). G. Prashant

Signature with Date

25/07/2022
25/7/22

PRINCIPAL
Guru Nanak Dev Engg. College, Bidar

ABSTRACT

Driving to save live time, and money in spite of the conditions around you and the actions of others."-This is the slogan for Defensive Driving. The Objective of this project is to develop a system to keep the vehicle secure and protect it by the occupation of the intruders. Vehicle accidents are most common if the driving is inadequate. These happen on most factors if the driver is drowsy or if he is alcoholic. Driver drowsiness is recognized as an important factor in the vehicle accidents. It was demonstrated that driving performance deteriorates with increased drowsiness with resulting crashes constituting more than 20% of all vehicle accidents. But the life lost once cannot be rewinded. Advanced technology offers some hope avoid these up to some extent. This project involves measure and controls the eye blink using IR sensor. The IR transmitter is used to transmit the infrared rays in our eye. The IR receiver is used to receive the reflected infrared rays of eye. If the eye is closed means the output of IR receiver is high otherwise the IR receiver output is low.

Accidents due to drowsiness can be controlled and prevented with the help of eye blink sensor using IR rays. It consists of IR transmitter and an IR receiver. The transmitter transmits IR rays into the eye.

PRINCIPAL
Guru Nanak Dev Engg. College, Bida

GURU NANAK DEV ENGINEERING COLLEGE, BIDAR-585403, KARNATAKA

DEPARTMENT OF ELECTRICAL AND ELECTRONICS ENGINEERING

CERTIFICATE

This is to certify that the Mini project report entitled **"ARDUINO MOTION DETECTOR USING PIR SENSOR"** is a bonafide work carried out by **GIRISH(3GN19EE005), MANJUNATH(3GN19EE008), SIDRAMESH (3GN19EE026), SURYAPRAKASH (3GN19EE030)** in partial fulfillment for the award of Degree of Bachelor of Engineering in ELECTRICAL & ELECTRONICS ENGINEERING, from the Visvesvaraya Technological University, Belagavi during the academic year 2021-2022. It is certified that the mini project report satisfies the academic requirement in respect of the mini project work prescribed for the Bachelor of Engineering degree.

Signature of Guide	Signature of HOD	Signature of Principal
PROF.DEEPAK GHODE	**Dr. NEELSHETTY. K**	**Dr. DHANANJAYA . D M**
		PRINCIPAL Guru Nanak Dev Engg. College BIDAR

Name of the Examiner **Signature with Date**

1)...SHUBHA . S..... SK 25/07/2022

2)...G. Prashant..... 22/7/2022

PRINCIPAL
Guru Nanak Dev Engg. College, Bidar

ABSTRACT

PIR Sensor Switch which can detect the Infrared Rays released by human body. The light or any other electrical appliance can be activated automatically by the active presence of a human body within the detection range / coverage area & when there is no presence the light will be deactivated automatically. PIR sensors allow you to sense motion, almost always used to detect whether a human has moved in or out of the sensors range. They are small, inexpensive, low-power, easy to use and don't wear out. For that reason they are commonly found in appliances and gadgets used in homes or businesses. They are often referred to as PIR, "Passive Infrared", "Pyro-electric" or "IR motion" sensors.

PRINCIPAL
Guru Nanak Dev Engg. College, Ridar

GURU NANAK DEV ENGINEERING COLLEGE

BIDAR-585403, KARNATAKA

ACADEMIC YEAR 2021-2022

DEPARTMENT OF

ELECTRICAL AND ELECTRONICS ENGINEERING

CERTIFICATE

This is to certify that the mini-project entitled " **TOUCH ON AND OFF SWITCH** " is a bonafide work carried out by **DEEPAK PAWAR (3GN19EE003), NAGRAJ NEKAR (3GN19EE011), VENCHERSAM (3GN19EE035) & ZHAHEER (3GN19EE039)** in partial fulfillment for the award of Degree of **Bachelor of Engineering in Electrical & Electronics Engineering affiliated Visvesvaraya Technological University, Belagavi** during the academic year 2021-2022. It is certified that mini project report satisfies the academic requirement in report of the mini project work described for the Bachelor of Engineering Degree.

Mr. SHRAVAN KUMAR	Dr. NEELSHETTY K	Dr. DHANANJAY D M
Signature of Guide	**Signature of HOD**	PRINCIPAL Guru Nanak Dev Engg. College BIDAR **Signature of Principal**

Name of the Examiner

1) SHOBHA.S

2) G. Prashant

Signature with Date

1) 25/07/2022

2) 25/07/2022

PRINCIPAL
Guru Nanak Dev Engg. College, Bid-

ABSTRACT

Touch On and Touch Off sensor switch using 555 timer IC on a breadboard. This circuit uses two pairs of touch conductors to sense and register the touch. One pair of touch conductors (sensors) for turning ON the output and the other pair for turning OFF the output.

You can use any output device like DC motors or AC appliances (like lights or fans) by using a relay at the output of 555 timer IC and by wiring the output device to the relay.

PRINCIPAL
Guru Nanak Dev Engg. College, Bid

GURU NANAK DEV ENGINEERING COLLEGE
BIDAR-585403, KARNATAKA
ACADEMIC YEAR 2021-2022

DEPARTMENT OF
ELECTRICAL AND ELECTRONICS ENGINEERING

CERTIFICATE

This is to certify that the mini project entitled "GENERATION OF ELECTRICITY BY WASTE MATERIAL" is a bonafide work carried out by **ANANAD SWAMY (3GN19EE002), SACHIN KALE (3GN19EE0020), SAIPRASAD (3GN19EE022) & SANGMESH (3GN19EE023)** in partial fulfillment for the award of Degree of **Bachelor of Engineering in Electrical & Electronics Engineering affiliated Visvesvaraya Technological University, Belagavi** during the academic year 2021-2022. It is certified that the mini project report satisfies the academic requirement in report of the mini project work described for the Bachelor of Engineering Degree.

Mr. DURGA PRASAD	Dr. NEELSHETTY K	Dr. DHANANJAY D M
Signature of Guide	**Signature of HOD**	**Signature of Principal**
		PRINCIPAL Guru Nanak Dev Engg. College BIDAR
Name of the Examiner		**Signature with Date**
1) SHUBHA S		1) 25/07/2022
2) G. Prashant		2) 25/7/22

PRINCIPAL
Guru Nanak Dev Engg. College, Bidar

ABSTRACT

The waste materials that are produced daily from different sources can be used to produce energy from which we can get electricity. The conventional fuels required for production of electricity is decreasing day by day and it is very important to find out alternative sources which can be used as the fuel for the production of electricity especially for developing countries like India This paper discusses waste materials as a renewable energy source. The paper explores the resources we have ready in our hand as well as the advantages and disadvantages of the using of waste materials as a source of electrical energy. The paper also reviews a few waste to energy projects in some other parts of the world and discusses the future of extracting energy from waste materials.

PRINCIPAL
Guru Nanak Dev Engg. College, Bidar

GURU NANAK DEV ENGINEERING COLLEGE

BIDAR-585403, KARNATAKA

ACADEMIC YEAR 2021-2022

DEPARTMENT OF

ELECTRICAL AND ELECTRONICS ENGINEERING

CERTIFICATE

This is to certify that the mini project entitled "VOLTAGE DETECTOR" is a bonafide work carried out by VIKAS (3GN20EE406), VENKATESH (3GN19EE036), SRIDUTT (3GN19EE029) & ABINEZER (3GN18EE003). In partial fulfillment for the award of Bachelor of Engineering in **Electrical & Electronics Engineering affiliated from Visvesvaraya Technological University, Belagavi** during the academic year 2021-2022. It is certified that the mini project report satisfies the academic requirement in respect of mini project work prescribed for the Bachelor of Engineering degree.

Mr. TVINAY(Asst. Prof.)	Dr. NEELSHETTY K	Dr. DHANANJAY D M
Signature of Guide	**Signature of HOD**	**Signature of Principal**
		PRINCIPAL Guru Nanak Dev Engg. College BIDAR
Name of the Examiner		**Signature with Date**
1) SHUBHAS	PRINCIPAL Guru Nanak Dev Engg. College, BIDAR	1) 25/07/2022
2) G. Prashant		2) 25/7/22

ABSTRACT

Electricity can cause serious injury or even death which is why safety must come first when with electricity or electrical devices. In order to avoid injury, prior to starting work on an electrical box such as an AC mains switch-board or a power supply, for example, you must first verify there is no AC voltage. If you can't completely isolate you device from the supply wires, how can you be sure that there is no voltage remaining? Enter a non-contact AC voltage detector.

There are several options available on the market and they range in price, but in true fashion, with this kit you are able to quickly and create your own non-contact AC voltage detector in less than an hour.

PRINCIPAL
Guru Nanak Dev Engg. College, Bidar

GURU NANAK DEV ENGINEERING COLLEGE

ACADEMIC YEAR 2021-2022

DEPARTMENT OF

ELECTRICAL AND ELECTRONICS ENGINEERING

CERTIFICATE

This is to certify that the mini project entitled **"FLAME SENSOR USING ARDUINO, LED AND BUZZER"** is a bonafide work carried out by POOJA (3GN19EE012), SAIMEGHA (3GN19EE021), PRIYADARSHINI (3GN19EE016) in partial fulfillment for the award of Degree of **Bachelor of Engineering in Electrical & Electronics Engineering affiliated Visvesvaraya Technological University, Belagavi** during the academic year 2021-2022. It is certified that the mini project report satisfies the academic requirement in report of the mini project work described for the Bachelor of Engineering Degree.

PROF.PRASHANT G
Signature of Guide

Dr. NEELSHETTY K
Signature of HOD

Dr. DHANANJAY D M
Signature of Principal
PRINCIPAL
Guru Nanak Dev Engg. College
BIDAR
Signature with Date
26/07/2022

Name of the Examiner

1) SHUBHA.S

2) G.Prashant

PRINCIPAL
Guru Nanak Dev Engg. College, Bidar

26/07/22

Abstract

Fire detection is the main objective of this project besides surveillance. The aim of the project is to early detection of fire apart from preventive measures to reduce the losses due to hazardous fire. The project mainly is based on image processing and arduino serial communication. In this project, at the user end, the fire images will be feeded in the form of video frames. These images will be further processed by using the software, MATLAB. The proposed system uses RGB and YCbCr color space. The advantage of using YCbCr color space is that it can separate the luminance from the chrominance more effectively than RGB color space. along with this smoke, motion, area detection is also performed using its color characteristics. The proposed system consist of hardware such as arduino, DHT 11 to monitor the Humidity and Temperature. There is a camera for the surveillance. This camera will give a real-time video output to the user on the laptop or computer via a small GUI-graphic user interface which is to be built in MATLAB. Thus the fire will be detected using this model. This project can also be served for security and surveillance applications.

PRINCIPAL
Guru Nanak Dev Engg. College, Bidar

GURU NANAK DEV ENGINEERING COLLEGE, BIDAR-585403, KARNATAKA

DEPARTMENT OF

ELECTRICAL AND ELECTRONICS ENGINEERING

CERTIFICATE

This is to certify that the Mini project report entitled **"WIRELESS ID CARD ENTRY SYSTEM"** is a bonafide work carried out by **SACHIN (3GN19EE019) SINDHU (3GN19EE027), SWATI (3GN19EE032), VAIJAYANTI (3GN19EE034),** in partial fulfillment for the award of Degree of Bachelor of Engineering in ELECTRICAL & ELECTRONICS ENGINEERING from the Visvesvaraya Technological University, Belagavi during the academic year 2021-2022. It is certified that the mini project report satisfies the academic requirement in respect of the mini project work prescribed for the Bachelor of Engineering degree.

Signature of Guide	Signature of HOD	Signature of Principal
Mrs. ROHINI. D	**Dr. NEELSHETTY. K**	**Dr. DHANANJAYA . MUKTEDAR**

PRINCIPAL
Guru Nanak Dev Engg. College
BIDAR

Name of the Examiner	**Signature with Date**
1) SHUBHA . S	25/07/2022
2) G. Prashant	25/07/2022

PRINCIPAL
Guru Nanak Dev Engg. College, Bidar

ABSTRACT

Initially RFID tags were developed to eventually replace barcodes in supply chains. Their advantages are that they can be read wirelessly and without line of sight, contain more information than barcodes, and are more robust. The paper describes the current technology, including the frequency ranges used and standards. With the increasing ubiquity of RFID tags, however, privacy became a concern. The paper outlines possible attacks that can violate one's privacy and it also describes counter measures. The RFID technology did not stop at item-level tagging. The paper also presents current research that focuses on locating and tracking labeled object that move. Since the uses for RFID tags are so widespread, there is a large interest in lowering the costs for producing them. It turns out that printing tags might become a viable alternative to traditional production.

PRINCIPAL
Nagarjuna Dev Engg. College, Bidar

GURU NANAK DEV ENGINEERING COLLEGE

BIDAR-585403, KARNATAKA

ACADEMIC YEAR 2021-2022

DEPARTMENT OF

ELECTRICAL AND ELECTRONICS ENGINEERING

CERTIFICATE

This is to certify that the project entitled "MONITORING AND ALERTING OF PATIENT HEALTH REMOTELY" is a Bonafede work carried out by ABDULHAMEED NADAF (3GN18EE400), SANTOSH REDDY (3GN17EE038), MOHAMMED IMRAN (3GN16EE020), SHAIK PARWAZ AHMED (3GN16EE035) in partial fulfillment for the award of Degree of **Bachelor of Engineering in Electrical & Electronics Engineering Affiliated Visvesvaraya Technological University, Belagavi** during the academic year 2021-2022. It is certified that the project report satisfies the academic requirement in report of the project work described for the Bachelor of Engineering Degree

Signature of Guide	Signature of HOD	Signature of Principal
Mrs. SHUBHA.S	Dr. NEELSHETTY K	Dr. DHANANJYA D MUKTEDAR

Name of the Examiner	Signature with Date
1) Megha	26/07/22
2) Dr. Neelshetty. K	26/7/2022

PRINCIPAL
Guru Nanak Dev Engg. College, Bidar

GURU NANAK DEV ENGINEERING COLLEGE

BIDAR-585403, KARNATAKA

ACADEMIC YEAR 2021-2022

DEPARTMENT OF

ELECTRICAL AND ELECTRONICS ENGINEERING

CERTIFICATE

This is to certify that the mini-project entitled **"AUTOMATIC PLANT WATERING SYSTEM"** is a bonafide work carried out by **HARIVISHNU(3GN20EE401), AMOL(3GN20EE400), GOWRE SUDARSHAN(3GN19EE006) AND DEEPAK(3GN19EE004)** in partial fulfillment for the award of Degree of **Bachelor of Engineering in Electrical & Electronics Engineering affiliated Visvesvaraya Technological University, Belagavi** during the academic year 2021-2022. It is certified that the mini project report satisfies the academic requirement in report of the mini project work described for the Bachelor of Engineering Degree.

Mr. SURESH PATIL (Asst. Prof.)	**Dr. NEELSHETTY K**	**Dr. DHANANJAY D M**
Signature of Guide	**Signature of HOD**	**Signature of Principal**
		PRINCIPAL Guru Nanak Dev Engg. College BIDAR

Name of the Examiner

1) SHOBHA S

2) G Prashant

PRINCIPAL
Guru Nanak Dev Engg. College, Bidar

Signature with Date

25/07/2022

25/07/22

ABSTRACT

In the present era, food scarcity and water scarcity occur due to the increase in population. o to avoid this problem we have to promote the agriculture sector. But water wastage is more in is sector in the form of water logging while watering the agricultural fields through irrigation. herefore an automatic plant irrigation system has to be designed for the proper water supply in e fields. This paper deals with an automatic plant irrigation system which automatically senses e moisture content of the soil and decide whether irrigation is needed or not and how much water needed for soil. This system uses AtMega328 microcontroller. It is programmed to sense the oisture content if the soil over a period of time. When the moisture content is less than the limit hich is predefined, it will start supplying the desired amount of water till it reaches the limit. So hen the soil is dry the pump will automatically water the fields and when the soil is wet the pump ill automatically switch off, there by eradicate the need of manpower and conserve the time.

PRINCIPAL
Guru Nanak Dev Engg. College, Bidar

GURU NANAK DEV ENGINEERING COLLEGE BIDAR-585403, KARNATAKA.

DEPARTMENT OF ELECTRICAL& ELECTRONICS ENGINEERING

CERTIFICATE

This is to certify that the Mini project report entitled "ARDUINO TRAFFIC LIGHT SIMULATOR" is a bonafide work carried out by **PALLAVI(3GN20EE402), SILVIA(3GN20EE405), PREETI PAWAR(3GN19EE014), SHARAN KUMAR (3GN18EE036).** In partial fulfillment for the award of Bachelor of Engineering in **ELECTRICAL & ELECTRONICS ENGINEERING from the Visvesvaraya Technological University, Belagavi** During the year 2021-2022.It is certified that the mini project Report satisfies the academic requirement in respect of mini project work prescribed for the Bachelor of Engineering degree.

Signature of Guide	Signature of HOD	Signature of Principal
MRS .BASAMMA.R	Dr.NEELSHETTY.K	Dr.DHANANJAYA.D MUKTEDAR

PRINCIPAL
Guru Nanak Dev Engg. College
BIDAR

Name of the Examiner

1)....SHUBHA.S.....

2)...G.Prashant.....

PRINCIPAL
College Bidar

Signature with Date

.....26/07/2022.....

.....26/07/22

ABSTRACT

Rapid advances in scientific understanding and global economic activity have resulted in a significant increase in the volume of automotive activity for human and product mobility, necessitating greater road construction. Controls for vehicular movement, as well as controllers, are thus a crucial requirement of modern society. This research aims to construct a microcontroller-based traffic control device to achieve this goal. For this project, the Arduino platform is the microcontroller of choice. A Light Emitting Diode (LED) advertising display has also been added into its implementation to take use of the red light wait period to distribute relevant information or facts, making this idea more effective and productive

PRINCIPAL
Guru Nanak Dev Engg College, Bidar

GURU NANAK DEV ENGINEERING COLLEGE
BIDAR, KARNATAKA

DEPARTMENT OF
ELECTRONICS AND COMMUNICATION ENGINEERING
CERTIFICATE

This is to certify that the project work entitled "**ANTI-SLEEP ALARM FOR DRIVERS USING ARDUINO AND EYE BLINK SENSOR**" is a bonafied work carried out by **SHUBHAM HADOLE (3GN19EC012), NITIN PATIL (3GN19EC031), NITISH(3GN19EC032)** in partial fulfilment for the award of degree of Bachelor of Engineering in Electronics and Communication Engineering from Visvesvaraya Technological University, Belagavi during the year 2021-22. It is certified that all corrections indicated for internal assessment have been incorporated in the report deposited in the department library. The project report has been approved as it satisfies the academics requirements in respect of project work prescribed for the Bachelor of Engineering degree.

Dr. PREMALA P DEPT OF E & CE Guru Nanak Dev Engg College, BIDAR (K S)	Dr. MD BAKHAR Head of E & CE Dept. (HOD ECE) G.N.D Engineering College BIDAR-585 403. (K.S)	Dr. DHANANJAY M PRINCIPAL (PRINCIPAL) Guru Nanak Dev Engg. College BIDAR

External Viva

Name of the Examiners	Signature with Date
1. Sons Mankal	
2. Pawan Mankal	

ABSTRACT

Nowadays There has been a very large increase in road accident due to drowsiness of driver while driving which leads to enormous fatal accident. The driver lose his control when he falls sleep which leads to accident. This is because when the driver is not able to control his vehicle at very high speed on the road. Driver in-alertness is an important cause for most accident related to the vehicle crashes. Driver fatigue resulting from sleep deprivation or sleep disorders is an important factor in the increasing number of the accidents on today's roads. Drowsy driver warning system can form the basis of the system to possibly reduce the accidents related to driver's drowsiness. This project can generate a model which can prevent such accidents. To prevent this, we outlined a very simple and economical system which deals with this issue. In this project, when a driver falling asleep, an alarm is raised to warn the driver attached to the rear of the vehicle. The alarm continues for a minimum of 10 seconds so that the driver wakes and get ready to steady the vehicle he drives. Thus we can control the major accidents.

PRINCIPAL
Guru Nanak Dev Engg. College, Bidar

GURU NANAK DEV ENGINEERING COLLEGE

BIDAR-585403, KARNATAKA

DEPARTMENT OF ELECTRONICS AND COMMUNICATION ENGINEERING

CERTIFICATE

This is to certify that the project work entitled "DESIGN & IMPLEMENTATION OF AN OPEN SOURCE & MODULAR RISC V CORE" is a bonafide work carried out by, **M A MUNEEB (3GN19EC017) & MD MOTESIM AHMED (3GN19EC022)**, in partial fulfillment for the award of Degree Bachelor of Engineering in **ELECTRONICS AND COMMUNICATION ENGINEERING** from the **VISVESVARAYA TECHNOLOGICAL UNIVERSITY, BELAGAVI** during the academic year 2021-2022. The mini-project report has been approved as it satisfies the academic requirements in respect of project work prescribed for the Bachelor of Engineering Degree.

Dr. VEERENDRA D.	**Dr. MD BAKHAR**	**Dr. DHANAJAY D.MAKTEDAR**
(Guide)	(HOD)	(Principal)

EXTERNAL VIVA

Name of examiner	**Signature with Date**
1) Soni Mankar	27/2/22
2) Pavan Mankar	27/2/22

PRINCIPAL
Guru Nanak Dev Engg. College, Bidar

CHAPTER 1

INTRODUCTION

ABSTRACT : This paper starts by briefing about Instruction Set Architecture (ISA), what it does, what is made up of, its work and role in digital systems and described about the two different types of ISA i.e., CISC & RISC. Then briefed about the history of RISC V, how it is evolved, fundings, support from tech-giants, collaboration with Linux Foundation, starting from a simple project to a revolutionary move in the domain of computing. We then described about the four modular RISC V Base ISAs which is the building blocks of any RISC V based cores. This Base ISAs are custom and can be used for simple implementation as well as we can extend its power by adding the Standard Extensions provided by the RISC V Organization. In this paper, we used the RV32I Base ISA and designed a simple yet powerful Core. Synthesis and Simulation results are attached that depicts the Overall working and functionality of the design. We aim to extend this work in future by adding different Instructions, integrating other base formats and extending its capabilities that suits and supports Embedded Applications.

1.1 ISA

Instruction Set Architecture (ISA) is an abstract model of a computer, it is the interface between both hardware and software. It is a collection of machine Language Instructions that a particular processor understands and executes. An ISA is computer-dependent and machine-dependent hence, for different families of computers, we have different ISAs. An ISA can take different formats of Instruction Length, type, length and position of operation codes and the number and length of operand addresses etc. Two major parts of ISA are Opcode and operands. Opcode means Operation Code that specifies operations to be performed whereas operand specifies the address field on which data processing is to be performed. An operand can reside in the memory or a processor or can be given as immediate data.

PRINCIPAL
Guru Nanak Dev Engg. College, Bidar

GURU NANAK DEV ENGINEERING COLLEGE BIDAR

DEPARTMENT OF ELECTRONICS AND COMMUNICATION ENGINEERING

CERTIFICATE

This is to certify that the mini project work entitled "PERFORMANCE ANALYSIS OF BEAM FORMER FOR MOBILE APPLICATION" is a bonafide work carried out by **ANJALI HONDALE (3GN19EC005), NISHU PATIL (3GN19EC030), SONALI EKLARKER (3GN19EC050)** in partial fulfilment of the requirements for the Bachelor's degree in ELECTRONICS AND COMMUNICATION ENGINEERING of VISVESVARAYA TECHNOLOGICAL UNIVERSITY, BELGAUM during the year 2021-2022. It is certified that this Mini Project Report has been approved as it satisfies the academic requirements.

Dr. VEERENDRA D (PROJECT GUIDE)	**Dr. Md. BAKHAR** (HOD ECE)	**Dr. DHANANJAY D.MAKTEDAR** (PRINCIPAL)

External Viva

Name of the Examiners	Signature with Date
1) Soni Mankani	
2) Pavan Mankal	

PRINCIPAL
Guru Nanak Dev Engg. College, Bidar

ABSTRACT

Smart antennas involve processing of signals induced on an array of sensors such as antennas, microphones, and hydrophones. They have applications in the areas of Radar, Sonar, Medical Imaging and Mobile Communication. Smart antennas have the property of spatial filtering, which makes it possible to receive energy from a particular direction while simultaneously block energy from other direction. This property makes smart antennas a very effective tool in detecting, locating sources and finally forming the main beam in the look direction and nulls in the interfering signal directions.

In this project, we analyzed the performance of various direction of arrival algorithms for direction estimation of incoming source signals. Namely, Bartlett and Multiple Signal Classification for detecting single and multiple mobile users. All the methods are simulated using MATLAB simulation software. We studied and compared the classical and subspace DOA methods. The simulation results clearly show that the subspace methods outperform the classical methods.

Furthermore, we analysed the performances of Sample Matrix Inversion (SMI) and Least Mean Square (LMS) adaptive beamforming algorithms. Simulation results clearly show that the SMI is suitable for only less antenna elements. It works properly for less than 10 antenna elements. This limits its application for 5G and above networks. Whereas LMS algorithm works efficiently for both less and more antenna elements. Hence LMS algorithm is much better than the SMI for smart antenna based wireless communication applications.

PRINCIPAL
Guru Nanak Dev Engg. College, Bidar

GURU NANAK DEV ENGINEERING COLLEGE BIDAR, KARNATAKA

DEPARTMENT OF ELECTRONICS AND COMMUNICATION ENGINEERING

CERTIFICATE

This certified that the mini project work entitled **"AUTOMATIC PLANT WATERING SYSTEM USING ARDUINO UNO"**, is a bonafide work carried out by **Maheshwari(3GN19EC019), Nageshwari(3GN19EC023)**, in partial fulfillment of requirements for the award of the Degree Bachelor of Engineering in ELECTRONICS AND COMMUNICATION ENGINEERING by **VISVESVARAYA TECHNOLOGICAL UNIVERSITY BELAGAVI**, during the academic year 2021-2022.It is certified that mini project has been approved as it satisfies academic requirement in respect of mini project prescribed for B.E.

Dr. SAVITA SOMA	**Dr.MD BAKHAR**	**Dr. DHANANJAY D MAKTEDAR**
(PROJECT GUIDE)	(HOD ECE)	(PRINCIPAL)

External Viva

Name of the Examiners	Signature with Date
1)....Nitin....K..	.....
2)....Pavan....Mankal	.....

PRINCIPAL
Guru Nanak Dev Engg. College, Bidar

Abstract

Automatic plant watering system, which is considered as one of the most commonly used and the most beneficial automated systems nowadays, which help people in their daily activities by reducing or completely replacing their effort. This system uses sensor technology along with microcontroller and other electronics in order to behave like smart switching system which senses soil moisture level and irrigates the plant if necessary. Purpose of this work is to show how someone can easily make own and cheap automatic plant watering system in just few hours by connecting certain electronic components and other materials required. In our experiment, we connected all required materials exactly as shown in this paper, in order to test whether our system will work properly or not. Although the system made in that way would be the most appropriate for home usage as solution for some daily and usual issues, there is a wide spectrum of possibilities of implementing these systems as a long-term solution for many agricultural and medical problems, some of which are undernourishment and air pollution as most prominent, dangerous and important ones. As one possible agricultural solution, this system can be very helpful in keeping vegetables and other useful and specific plants watered for bigger harvest, which enables farmers from all around world to breed crops of these plants which are the most wanted and the most commonly used in diet. As medical solution, these systems can be used for purpose of cultivating certain plants that are famous and well known by their ability to remove air pollutants and therefore reduce the concentration of toxic pollutants in the air as well the occurrence of respiratory diseases. Future possibilities include some challenging and demanding ideas like joining plants of similar variety and characteristics into complex connections of plants, called "Internet of plants". There are also many other possibilities like using more than one sensor or solar power supply for experimental purposes, but the fact is however, that, independently of the materials used and the way in which they are connected, this type of automated systems can be very helpful in solving very wide of human-related problems nowadays.

Principal
College, Bidar

VIVESVARAYA TECHNOLOGICAL UNIVERSITY BELGAVI

GURU NANAK DEV ENGINERING COLLEGE BIDAR,AFFILATED TO VTU, BELAGAVI

DEPARTMENT OF ELECTRONICS AND COMMUNICATION ENGINEERING

CERTIFICATE

This is to certify that the project work entitled "DIGITAL RULER USING ARDUINO" is a bonafied work carried out by ATIF SHAZEB (3GN19EC007) , KAMRAN ABDUL RAFEY (3GN19EC014) , NASER (3GN19EC024) in partial fulfillment for the award of degree of Bachelor of Engineering in Electronics and Communication Engineering **from** Visvesvaraya Technological University , Belagavi **during the year 2021-22 . It is certified that all corrections indicated for internal assessment have been incorporated in the report deposited in the department library . The project report has been approved as it satisfies the academics requirements in respect of project work prescribed for the Bachelor of Engineering degree**

Signature of Guide	Signature of Hod	Signature of Principle
Prof. RAJENDAR KULKARNI (PROJECT GUIDE)	Dr.Md Bakhar (HOD ECE)	Dr. DHANANJAY D.MAKTEDAR (PRINCIPAL)

Name of Examiners

1).....

2).....

Prof.SONI MANKARI
(PROJECT COORDINATOR)

Signature with date

1).....

2).....

PRINCIPAL
Guru Nanak Dev Engg. College, Bidar

CHAPTER 1

INTRODUCTION

ABSTRACT

This paper starts by briefing about the device called digital ruler .we developed a digital ruler that dynamically helps people in all measuring aspects.we describes what is does, what it is made up of,how it works and it's role in the digital systems.we also provides the description of its components like Arduino uno which is an open source microcontroller board based on micro chip ATmega328p.

an ultra sonic sensor that generate or sense ultra sound energy, LCD display module used to display data in devices such as calculators, ovens etc and an I2C module which is synchronous ,multi master packet switched single ended serial bus.How it reduce the man work. We aim to extend this project in future by adding different instruction and extending its capabilities that suits and support embedded applications.

PRINCIPAL
Engg. College, Bidar

GURU NANAK DEV ENGINEERING COLLEGE

BIDAR-585403

DEPARTMENT OF

ELECTRONICS AND COMMUNICATION ENGINEERING

CERTIFICATE

This is to certify that the mini project work entitled "MOBILE PHONE DETECTOR" is a Bonafede work carried out by ANJALI B (3GN19EC004), BASAVASHREE (3GN19EC009), BHAGYASHRI (3GN20EC400) in partial fulfilment of the requirements for the Bachelor's degree in ELECTRONICS AND COMMUNICATION ENGINEERING of VISVESVARAYA TECHNOLOGICAL UNIVERSITY, BELGAUM during the year 2021-2022. It is certified that this Mini Project Report has been approved as it satisfies the academic requirements.

Prof. NAMRATHA	**Dr. MD BAKHAR**	**Dr.DHANANJAY D.MAKTEDAR**
(PROJECT GUIDE)	(HOD ECE)	(PRINCIPAL)

External Viva

Name of the Examiners	Signature with Date
1. Sonil Manikrao	
2. Pavan Kumar	

PRINCIPAL
Guru Nanak Dev Engg. College, Bidar

Abstract

This work involves the design and development of a digital signal detector which is capable of detecting incoming and outgoing signals from mobile phones. The presence of an activated mobile phone can be detected by this handy, pocketsize mobile signal detector from a distance of one and a half meters, which could be used in preventing the use of mobile phones in examination halls, confidential rooms etc. It is also suitable for detecting the use of mobile phone for spying and unauthorized video transmission. The circuit can detect the incoming and outing calls, text messages, and video transmission even if the mobile is kept in the silent mode. The moment the gadget detects Radio Frequency (RF) transmission signal from an activated mobile phone, it starts sounding a beep alarm and the Light Emitting Diode (LED) blinks. The alarm continues until the signal transmission ceases.

The circuit is assembled on a general purpose PCB as compact as possible and enclosed in a small box.

Dhauz

Gi... Didar

VISVESVARAYA TECHNOLOGICAL UNIVERSITY, BELAGAVI

GURU NANAK DEV ENGINEERING COLLEGE, BIDAR-585403, KARNATAKA

DEPT. OF ELECTRONICS AND COMMUNICATION ENGINEERING

CERTIFICATE

This is to certify that the mini project work entitled **"LASER SECURITY ALARM SYSTEM"** is a bonafide work carried out by **NISHA (3GN18EC023) , PALLAVI (3GN20EC401)** in partial fulfillment of the requirements for the award B.E in Electronics and ommunication engineering by visvesvaraya technological university, belagavi during academic year 2021-2022. It is certified that the mini project report has been approved as it satisfies the academic requirements in respect of the mini project work prescribed for B.E.

Signature of guide
Prof. NITIN KULKARNI

Signature of HOD
Dr.MUBAKHAR

EXAMINER 1:

EXAMINER 2:

PRINCIPAL
Guru Nanak Dev Engg. College, Bidar

ABSTRACT

This project deals with a model of laser security alarm system design. Laser security systems used to be difficult to install and rarely available to anyone other than the super-rich. Now, there are dozens of different security systems on the market that utilize lasers and can effectively protect everything from small apartments and businesses to large areas of property. Most home laser security systems consist of two parts: a basic alarm unit and an infrared motion detector. Laser based security system is a type of security and alarm system that uses laser light and a light sensor. Why a laser to be used? It is known that a laser light goes through long distance without any scattering effect (disturbing) and it is only visible at source and the destination point so it can be used as mediator between source and destination but to analyse the source a sensor is need, here the use of LDR is applicable. Just analysis is not enough alerting should be done in general alerting is sound effect so here buzzer act as alerting. Making use of this, a laser security system is designed. Its working: There is a laser diode that generates the laser beam which continuously strikes over the Light dependent resister sensors. When any person crosses the path, it inhibits laser to reach LDR and the sensor generate a low which is read by controller to power on the buzzer

PRINCIPAL
Guru Nanak Dev Engg. College, Bidar

GURU NANAK DEV ENGINEERING COLLEGE BIDAR, KARNATAKA 585401

2021-2022

DEPARTMENTOF

ELECTRONICSAND COMMUNICATION ENGINEERING

CERTIFICATE

This is certified the mini project work on **"ARDUINO BASED WIRELESS NOTICE BOARD USING BLUETOOTH"** is a bonafide work carried out by **NAUSHEEN HASSAN (3GN19EC025), NAZNEEN FATIMA (3GN19EC027), NISHA JOSHI (3GN19EC029)** in partial fulfillment of there requirements for the award of the Degree **Bachelor of Engineering in Electronics and Communication Engineering** from Visvesvaraya Technological University, Belagavi during the year 2021-2022. Itcertified that all the corrections/suggestions indicated for internal assessment have been incorporated in the report deposited in the department library. The project report has been approved as its satisfies the academic requirements in respectofmini project work prescribedfor theBachelorof EngineeringDegree.

Signature of guide	Signature of HOD	Signature of Principal
Prof. Shilpa Biradar	**Prof. MD Bakhar**	**Dr. Dhananjay Maktedar**

Name of Examiners

1) Soni Mankari

2) _____

Signature with Date

1) _____

2) _____

PRINCIPAL
Guru Nanak Dev Engg. College, Bidar

ABSTRACT

Bluetooth based wireless notice board using Arduino will help us in passing any message almost immediately without any delay just by sending a SMS which is better and more reliable than the old conventional way of passing the message on notice board. This proposed idea can be used in colleges, many public places, to enhance the security system and also make awareness of the emergency situations and avoid many dangerous situations. For this purpose, Android based application programs for Bluetooth and Wi-Fi communication between Android based personal digital assistant devices and remote wireless display board are used Using the developed system, two different applications for displaying messages on a remote digital notice board and wireless person calling has been implemented. It also helps in saving the time and the cost for paper and printing hardware.

The notice boards being used specially at offices and public places to display important news and notices. To make the notice boards easy to use and more technically advance, I have used this prototype of wireless notice board where we can display the message by simply sending the message through your cell phone. These display systems are very accurate and easy to control and cheaply available and the most important thing is that they can be operated on low Voltage (Up to 12 Voltage). Arduino is a tool for making computers that can sense and control more of the physical world than your desktop computer. It's an open- source physical computing platform based on a simple microcontroller board, a development environment for writing software for the board. Our project is designed with the Arduino module and the Android technology.

Keywords: Bluetooth HC05, Arduino Uno, LCD.

GURU NANAK DEV ENGINEERING COLLEGE

MAILOOR ROAD BIDAR, KARNATAKA-585403

DEPARTMENT OF ELECTRONICS AND COMMUNICATION ENGINEERING

CERTIFICATE

This is to certify that the Internship entitled "**Clap Switch**" a bonafide work carried out by Vissa Anil (3GN18EC060), Nikhilesh (3GN19EC028) in partial fulfilment for the award of degree of Bachelor of Engineering in Electronics and Communication Engineering from Visvesvaraya Technological University, Belagavi during the academic year 2021-2022. It is certified that all the corrections / suggestions indicated for internal assessment have been incorporated in the report deposited in the department library. The Mini-project report has been approved as it satisfies the academic requirements in respect of mini-project prescribed for the Bachelor of Engineering Degree.

Signature of Principal	Signature of HOD	Signature of Guide
(Dr. Dhananjay D Maktedar)	(Dr. Md Bhakar)	(Prof. Santosh Yadav)

PRINCIPAL
Guru Nanak Dev Engg. College, Bidar

ABSTRACT

Clap switch is an interesting hobby circuit which turns on the lights with a clap sound. Although its name is "Clap switch", but it can be turned ON by any sound of approximately same pitch of Clap sound. The main component of this clap switch circuit is the Electric Condenser Mic, which has been used as a sound sensor. Condenser Mic basically converts sound energy into electrical energy, that in turns used to trigger 555 timer IC, through a Transistor. And triggering of 555 IC would turn ON the LED, which will be automatically turned OFF after some time. I have made this circuit as simple as possible, you can find many complex Clap switches (using 555 IC) with some more components in it, and merely doing the same thing. Even make things simpler require more effort than making it complex.

PRINCIPAL
Guru Nanak Dev Engg. College, Bidar

GURU NANAK DEV ENGINEERING COLLEGE BIDAR

DEPARTMENT OF

ELECTRONICS AND COMMUNICATION ENGINEERING

CERTIFICATE

This is to certify that the mini project work entitled "HOME AUTOMATION SYSTEM (BY CONTROLLING LED) USING NODEMCU AND WEBSERVER" is a Bonafede work carried out by AISHWARYA(3GN19EC002),KAVYANJALI(3GN19EC015),MADHU (3GN19EC018) in partial fulfilment of the requirements for the Bachelor's degree in ELECTRONICS AND COMMUNICATION ENGINEERING of VISVESVARAYA TECHNOLOGICAL UNIVERSITY, BELGAUM during the year 2021-2022. It is certified that this Mini Project Report has been approved as it satisfies the academic requirements.

Prof. SONI MANKARI	**Dr. MD BAKHAR**	**Dr. DHANANJAY D. MAKTEDAR**
(PROJECT GUIDE)	**(HOD ECE)**	**(PRINCIPAL)**

External Viva

Name of the Examiners	**Signature with Date**
1)..Soni Mankari.....	..... 23/7/22
2)..Pavan mankal.....	Pavan 23/7/22

PRINCIPAL
Guru Nanak Dev Engg. College, Bidar

Abstract

Home automation is a topic which gaining popularity day by day, because of large advantages. One can achieve home automation by simply connecting home appliance electrical devices to the internet or cloud storage. the reason for this surge demand of network enabled home automation is reaching the zenith in recent days for its simplicity and comparable affordability. Platforms based on cloud computing help to connect to the things surroundings everyone so that one can find it easy to access anything and everything at any time and place in a user friendly manner using custom defined portals. Hence, cloud act as a front end to access IOT. Here we are assuming a system which can control devices through wireless based network or cloud based approach. In project we use IOT based home automation system which goal is to develop a home automation system that gives the user complete control over all remotely controllable aspects of his or her home. The automation system will have ability to be controlled from a central host PC, the internet, and also remotely accessed via a packet PC with a windows mobile based application.

Our project titled "Home Automation using IoT" holds relevance in today's world which is largely driven by technology in many ways. Home Automation has always had one purpose and that is to control your home using either your voice or with a touch of a button, and since most of today's technology is advanced and supports this idea, it only makes sense to utilise this idea of automation to the fullest if not in some way or the other.

PRINCIPAL
Guru Nanak Dev Engg. College, Bidar

VISVESVARAYA TECHNOLOGICAL UNIVERSITY
BELAGAVI, KARNATAKA

GURU NANAK DEV ENGINEERING COLLEGE BIDAR, KARNATAKA

DEPARTMENT OF ELECTRONICS AND COMMUNICATION ENGINEERING

CERTIFICATE

This certified that the preliminary project review report on topic "AUTOMATIC TOL TAX USING AURDINO",a bonafide work carried out by ANKUR(3GN19EC006), AUGUSTINE(3GN19EC008), JAGADISH(3GN19EC008), in partial fulfillment of requirements for the award of the Degree B.E 6th semester course in ELECTRONICS AND COMMUNICATION ENGINEERING by **VISVESVARAYA TECHNOLOGICAL UNIVERSITY BELAGAVI, during the year 2021-2022**

Prof. SONI MANKARI (PROJECT GUIDE)	Dr.Md. BAKHAR (HOD ECE)	Dr.DHANANJAYD.MAKTEDAR (PRINCIPAL)

External Viva

Name of the Examiner	Signature and date
1. N. Ha. K.	27-7-22
2. Pavan mankal	28/7/22

PRINCIPAL
Guru Nanak Dev Engg. College, Bidar

CHAPTER-1

TOLL TAX SYSTEM USING ARDUINO : ULTRA SONIC SENSOR WITH SERVO MOTO

Abstract

Online Toll gate management system is designed to automatically keep track of the vehicle's movement, record the time and the details like Owner's name, date of registration, vehicle model etc. This system is very useful for automatic vehicle tracking, time management and also for automation of Toll gate.

PRINCIPAL
Guru Nanak Dev Engg. College, Bidar

GURU NANAK DEV ENGINEERING COLLEGE BIDAR

DEPARTMENT OF

ELECTRONICS AND COMMUNICATION ENGINEERING

CERTIFICATE

This is to certify that the mini project work entitled "RADAR SYSTEM" is a Bonafede work carried out by AKASH (3GN19EC003), PRASHANTH (3GN19EC036) AND PREM(3GN19EC038) in partial fulfilment of the requirements for the Bachelor's degree in ELECTRONICS AND COMMUNICATION ENGINEERING of VISVESVARAYA TECHNOLOGICAL UNIVERSITY, BELGAUM during the year 2021-2022. It is certified that this Mini Project Report has been approved as it satisfies the academic requirements.

Dr. MD BAKHAR	**Dr. MD BAKHAR**	
(PROJECT GUIDE)	(HOD ECE)	(PRINCIPAL)

External Viva

Name of the Examiners	Signature with Date
1).....	.....
2).....	.....

PRINCIPAL
Guru Nanak Dev Engg. College, Bidar

Scanned with OKEN Scanne

CHAPTER 1

INTRODUCTION

Fires represent a constant threat to ecological systems, infrastructure and human lives. Past has witnessed multiple instances of fires. With the faster and faster urbanization process, more and more high-rise buildings appear around us. This also can make the frequency of fire increase and bring great losses to people's lives and property. In areas where fire would pose an unreasonable threat to property, human life or important biological communities, efforts should be made to reduce dangers of fire. As the damage caused by fires is so tremendous that the early fire detection is becoming more and more important. Recently, some fire detectors have been used in many places, they used the smoke, temperature and photosensitive characteristics to detect fires. But they are too worse to meet the needs in a large space, harsh environment or the outdoor environment etc.

Traditional fire protection methods use below:

Watch Fire Tower

In watch towers human are made to observe the location throughout. If any fire occurs he reports it. However, accurate human observation may be limited by operator fatigue, time of day, time of year, and geographic location.

Wireless Sensor

Networks In a wireless sensor-based fire detection system, coverage of large areas in forest is impractical due to the requirement of regular distribution of sensors in close proximity and also battery charge is a big challenge.

PRINCIPAL
Guru Nanak Dev Engg. College, Bidar

Scanned with OKEN Scanne

ARDUINO WITH FIRE SENSOR LED AND BUZZER

Satellite and Aerial

Monitoring Satellites based system can monitor a large area, but the resolution of satellite imagery is low. A fire is detected when it has grown quite a lot, so real time detection cannot be provided. Moreover, these systems are very expensive. Weather condition (e.g. clouds) will seriously decrease the accuracy of satellite-based forest fire detection as the limitations led by the long scanning period and low resolution of satellites.

Motion detection is used to detect any occurrence of movement in a video. It is done by analyzing difference in images of video frames. There are three main parts in moving pixel detection: frame/background subtraction, background registration, and moving pixel detection Similar to the fire detection. We are also modeling smoke pixels. The smoke pixels do not show chrominance characteristics like fire pixels. At the beginning, when the temperature of the smoke is low, it is expected that the smoke will show color from the range of white-bluish to white. Toward the start of the fire, the smoke's temperature increases and it gets color from the range of black-grayish to black.

Area detection method is used to detect dispersion of fire pixel area in the sequential frames. DHT11 Temperature & Humidity Sensor features a temperature & Humidity Sensor features a temperature & humidity sensor complex with a calibrated digital signal output. As the fire increases humidity decreases and temperature increases, for this threshold is set. So after analyzing all above parameters fire will be detected and it will give pop-up on the screen of a fire action to suppress fire and to avoid losses of human lives and their valuable Properties.

PRINCIPAL
Guru Nanak Dev Engg. College, Bidar

Scanned with OKEN Scanne

GURU NANAK DEV ENGINEERING COLLEGE BIDAR

DEPARTMENT OF

ELECTRONICS AND COMMUNICATION ENGINEERING

CERTIFICATE

This is to certify that the mini project work entitled "RADAR SYSTEM" is a Bonafede work carried out by VEER VIKRAM SINGH (3GN19EC062), VEERENDRA PATIL (3GN19EC063). VISHNU JOSHI (3GN19EC064) in partial fulfilment of the requirements for the Bachelor's degree in ELECTRONICS AND COMMUNICATION ENGINEERING of VISVESVARAYA TECHNOLOGICAL UNIVERSITY, BELGAUM during the year 2021-2022. It is certified that this Mini Project Report has been approved as it satisfies the academic requirements.

Dr. ANURADHA A (PROJECT GUIDE) DEPT OF E & CE Guru Nanak Dev Engg College, BIDAR (K S)	**Dr. MD BAKHAR** Head of E & CE Dept. G.N.D Engineering College BIDAR-585 403. (K.S) External Viva	**Dr. DHANANJAY D. MAKTEDAR** (PRINCIPAL) PRINCIPAL Guru Nanak Dev Engg. College BIDAR

Name of the Examiners | Signature with Date

1) Soni Mankani

2) Parag Manlal

PRINCIPAL
Guru Nanak Dev Engg. College, Bidar

Scanned with OKEN Scanne

Abstract

RADAR is a detection system that uses radio waves to determine the characteristics of the detected objects such as: range, height, direction, or the speed of objects. In this paper, we designed a radar system that uses an ultrasonic sensor to detect objects. In this paper, the ultrasonic is used to measure the distance between the radar and any object-based non-contact technology. Whereas, the movement of the sensor is controlled by using a small servo motor. This radar-controlled using the Arduino Uno board as a microcontroller. The signal received from the sensor would be processed using "Processing Development Environment Software," then the result would be shown on a PC screen.

PRINCIPAL
Guru Nanak Dev Engg. College, Bidar

Scanned with OKEN Scanne

GURU NANAK DEV ENGINEERING COLLEGE BIDAR

DEPARTMENT OF

ELECTRONIC AND COMMUNICATION ENGINEERING

CERTIFICATE

This is to certify that the mini project work entitled "TRAFFIC LIGHT SIMULATOR" is a bonafede work carried out by VEENA (3GN19EC061), ZOHA MAHEEN (3GN19EC065), GOURI KULKARNI (3GN19EC066) in partial fulfilment of the requirements for the Bachelor's degree in ELECTRONIC AND COMMUNICATION ENGINEERING of VISVESVARAYA TECHNOLOGICAL UNIVERSITY, BELGAUM during the year 2021-2022. This mini project report has been approved as it satisfies the academic requirements.

SIGNATURE (GUIDE)	SIGNATURE (HOD ECE)	SIGNATURE (PRINCIPAL)

External Viva

Name of the Examiners	Signature with Date
1).....	.....
2).....	.....

PRINCIPAL
Guru Nanak Dev Engg. College, Bidar

Abstract

Rapid advances in scientific understanding and global economic activity have resulted in a significant increase in the volume of automatic activity for human and product mobility, necessitating greater road construction. Controls for vehicular movement, as well as controllers, are thus a crucial requirement of modern society.

This research aims to construct a micro-controller-based traffic control device to achieve this goal. For this project, the Arduino platform is the micro-controller of choice. A Light Emitting Diode (LED) advertising display has also been added into its implementation to take use of the red light wait period to distribute relevant information or facts, making this idea more effective and productive.

PRINCIPAL
Guru Nanak Dev Engg. College, Bidar

GURU NANAK DEV ENGINEERING COLLEGE BIDAR

DEPARTMENT OF

ELECTRONICS AND COMMUNICATION ENGINEERING

CERTIFICATE

This is to certify that the mini project work entitled "PARKING RADAR SENSOR USING ARDUINO" is a Bonafede work carried out by SUKESHINI (3GN19EC052), SUMAVATI (3GN19EC053), SANDHYARANI (3GN19EC043), in partial fulfilment of the requirements for the Bachelor's degree in ELECTRONICS AND COMMUNICATION ENGINEERING of VISVESVARAYA TECHNOLOGICAL UNIVERSITY, BELGAUM during the year 2021-2022. It is certified that this Mini Project Report has been approved as it satisfies the academic requirements.

Dr. PRAVEEN REDDY (PROJECT GUIDE)	**Dr. MD BAKHAR** (HOD ECE)	**Dr. DHANANJAY D.MAKTEDAR** (PRINCIPAL)

External Viva

Name of the Examiners	Signature with Date
1)..... Nitin K.....	1).....
2)..... Pavan Manikar.....	2).....

PRINCIPAL
Guru Nanak Dev Engg. College, Bidar

Scanned with OKEN Scanne

Abstract

Now a days there are so many major accidents occurs because of the carelessness of the driver and many more things like negligence, human errors and some vehicle errors such as break failures etc, so majorly in this project we are mainly focusing on the parking sensor which is used to sense the car or any other vehicles which is near to our vehicles.

In this project we are using 5-6 LED lights and buzzer depending upon the distance which is nearer to our vehicle LED and buzzer will start glowing and which alerts the people and prevents many accidents.

As we are using some basic components such as Arduino, ultrasonic sensor and LED and Buzzer, Ultra Sonic sensor which senses the distance which is away from the vehicle, whenever other vehicles come nearer the different LED will start glowing and buzzer glows.

PRINCIPAL
Guru Nanak Dev Engg. College, Bidar

Scanned with OKEN Scanner

GURU NANAK DEV ENGINEERING COLLEGE BIDAR

DEPARTMENT OF

ELECTRONICS AND COMMUNICATION ENGINEERING

CERTIFICATE

This is to certify that the mini project work entitled "OBSTACLE DETECTOR USING ARDUINO" is a Bonafede work carried out by DEEPIKA (3GN19EC011), PADMAVATI (3GN19EC034), SANJEEVINI (3GN19EC044), SANYUKTA (3GN19EC045) in partial fulfilment of the requirements for the Bachelor's degree in ELECTRONICS AND COMMUNICATION ENGINEERING of VISVESVARAYA TECHNOLOGICAL UNIVERSITY, BELGAUM during the year 2021-2022. It is certified that this Mini Project Report has been approved as it satisfies the academic requirements.

Prof. PAVAN MANKAL (PROJECT GUIDE)	**Dr. MD BAKHAR** (HOD ECE)	**Dr. DHANANJAY D.MAKTEDAR** (PRINCIPAL)

External Viva

Name of the Examiners	Signature with Date
1) Soni Mankam	27/07/22
2) Pavan mankal	27/7/22

PRINCIPAL
Guru Nanak Dev Engg. College, Bidar

Scanned with OKEN Scanne

Abstract

Train accidents aren't as common as other transportation accidents, which perhaps is why they aren't viewed as a major threat.

Although railroads aren't used as often as they were in centuries past, they still remain quite active. Unfortunately, when train accidents happen, they often result in serious injuries and fatalities.

This is a simple guide on how to make a distance detector using an **Arduino**, a **HC-SRO4 Ultrasonic Sensor**, a **Buzzer**, and some **LED's**.

The ultimate goal of this project is to use the buzzer and LED's to display how far the object is from the ultrasonic sensor.

PRINCIPAL
Guru Nanak Dev Engg. College, Bidar

Scanned with OKEN Scanne

GURU NANAK DEV ENGINEERING COLLEGE BIDAR

DEPARTMENT OF
ELECTRONICS AND COMMUNICATION ENGINEERING
CERTIFICATE

This is to certify that the mini project work entitled **"SERVO DISTANCE INDICATOR USING ARDUINO"** is a bonafide work carried out by SHRADDHA (3GN19EC035), SHAILAJA (3GN19EC046), SHILPA (3GN19EC048) in partial fulfillment of the requirements for the Bachelor's degree in ELECTRONICS AND COMMUNICATION ENGINEERING of VISVESVARAYA TECHNOLOGICAL UNIVERSITY, BELGAUM during the year 2021-2022. It is certified that this Mini Project Report has been approved as it satisfies the academic requirements.

PROF. SANTOSH YADAV (PROJECT GUIDE)	Dr.MD BAKHAR (HOD ECE)	Dr. DHANAJAY D .MAKTEDAR (PRINCIPAL)

Head of E & CE Dept.
G.N.D Engineering College
BIDAR-585 403. (K.S)

PRINCIPAL
Guru Nanak Dev Engg. College
BIDAR

External Viva

Name of the Examiners	Signature with Date
1).....Nitin K.....	.....
2)...Paras mansal.....	.....

PRINCIPAL
Guru Nanak Dev Engg. College, Bidar

Scanned with OKEN Scanne

ABSTRACT

This project uses an ultrasonic sensor module to detect objects in front of it. The sensory output from the ultrasonic module is used to trigger the rotation of the servo motor. The degree of rotation of the motor is directly proportional to the distance of the object from the ultrasonic module. The project is designed to develop distance measurement system using ultrasonic waves and interfaced with arduino. We know that human audible range is 20hz to 20khz. We can utilize these frequency range waves through ultrasonic sensor HC-SR04.The advantages of this sensor when interfaced with arduino which is a control and sensing system, a pro per distance measurement can be made with new techniques. As large amounts are spent for hundreds of inflexible circuit boards, the arduino will allow business to bring many more unique devices. This distance measurement system can be widely used as range meters and as proximity detectors in industries. The hardware part of ultrasonic sensor is interfaced with arduino. This method of measurement is efficient way to measure small distances precisely. The distance of an obstacle from the sensor is measured the rough ultrasonic sensor. After knowing the speed of sound the distance can be calculated.

PRINCIPAL
Guru Nanak Dev Engg. College, Bidar

Scanned with OKEN Scanne

GURU NANAK DEV ENGINEERING COLLEGE BIDAR

DEPARTMENT OF

ELECTRONICS AND COMMUNICATION ENGINEERING

CERTIFICATE

This is to certify that the mini project work entitled "ARDUINO WITH FIRE SENSOR ,LED AND BUZZER" is a Bonafied work carried out by NAVYASHREE (3GN19EC026), VAISHNAVIDEVI (3GN19EC059),VANIKA (3GN19EC060), in partial fulfilment of the requirements for the Bachelor's degree in ELECTRONICS AND COMMUNICATION ENGINEERING of VISVESVARAYA TECHNOLOGICAL UNIVERSITY, BELGAUM during the year 2021-2022. It is certified that this Mini Project Report has been approved as it satisfies the academic requirements.

Prof RAMYA S PURE (PROJECT GUIDE)	**Dr. MD BAKHAR** (HOD ECE)	**Dr. DHANANJAY D.MAKTEDAR** (PRINCIPAL)

External Viva

Name of the Examiners	Signature with Date
1) Soni Manca	
2) Pavan Manca	

PRINCIPAL
Guru Nanak Dev Engg. College, Bidar

Scanned with OKEN Scanne

ABSTRACT

Fire detection is the main objective of this project besides surveillance. The aim of the project is to early detection of fire apart from preventive measures to reduce the losses due to hazardous fire. The project mainly is based on image processing and arduino serial communication. In this project, at the user end, the fire images will be feeded in the form of video frames. These images will be further processed by using the software, MATLAB. The proposed system uses RGB and YCbCrcolor space. The advantage of using YCbCrcolor space is that it can separate the luminance from the chrominance more effectively than RGB color space. along with this smoke, motion, area detection is also performed using its color characteristics. The proposed system consist of hardware such as arduino, DHT 11 to monitor the Humidity and Temperature. There is a camera for the surveillance. This camera will give a real-time video output to the user on the laptop or computer via a small GUI-graphic user interface which is to be built in MATLAB. Thus the fire will be detected using this model. This project can also be served for security and surveillance applications.

PRINCIPAL
Guru Nanak Dev Engg. College, Bidar

Scanned with OKEN Scanner

GURU NANAK DEV ENGINEERING COLLEGE BIDAR

DEPARTMENT OF

ELECTRONICS AND COMMUNICATION ENGINEERING

CERTIFICATE

This is to certify that the mini project work entitled "DISTANCE MEASURING USING ULTRA-SONIC SENSOR" is a Bonafede work carried out by P.SRINIVAS(3GN19EC033), *SAI ADITYA(3GN19EC041), SYED MUJTABA ALI(3GN19EC055) in partial fulfilment of* the requirements for the Bachelor's degree in ELECTRONICS AND COMMUNICATION ENGINEERING of VISVESVARAYA TECHNOLOGICAL UNIVERSITY, BELGAUM during the year 2021-2022. It is certified that this Mini Project Report has been approved as it satisfies the academic requirements.

Prof. PRADEEP.K. (PROJECT GUIDE) DEPT OF E&CE Guru Nanak Dev Engg College, BIDAR (K S)	**Dr. MD BAKHAR** (HOD ECE) Head of E & CE Dept. G.N.D Engineering College BIDAR-585 403. (K.S)	**Dr.DHANANJAY.D.M.** (PRINCIPAL) PRINCIPAL Guru Nanak Dev Engg. College BIDAR

External Viva

Name of the Examiners	Signature with Date
1).....Nitin.K.....	.....28.7.22
2)...Pavan Mankal.....	.....28/7/22

PRINCIPAL
Guru Nanak Dev Engg. College, Bidar

Scanned with OKEN Scanne

Abstract

The project is designed to develop distance measurement system using ultrasonic waves and interfaced with arduino. We know that human audible range is 20hz to 20khz. We can utilize these frequency range waves through ultrasonic sensor HC-SR04.The advantages of this sensor when interfaced with arduino which is a control and sensing system, a pro per distance measurement can be made with new techniques. As large amounts are spent for hundreds of inflexible circuit boards, the arduino will allow business to bring many more unique devices. This distance measurement system can be widely used as range meters and as proximity detectors in industries. The hardware part of ultrasonic sensor is interfaced with arduino. This method of measurement is efficient way to measure small distances precisely. The distance of an obstacle from the sensor is measured through ultrasonic sensor. After knowing the speed of sound the distance can be calculated.

PRINCIPAL
Guru Nanak Dev Engg. College, Bidar

Scanned with OKEN Scanne

GURU NANAK DEV ENGINEERING COLLEGE BIDAR

DEPARTMENT OF
ELECTRONICS AND COMMUNICATION ENGINEERING
CERTIFICATE

This is to certify that the mini project work entitled **"PASSWORD DOORLOCK USING ARDUINO"** is a Bonafide work carried out by RAKSHITA (3GN19EC040), SAKSHI (3GN19EC042), VAISHNAVI (3GN19EC058) in partial fulfilment of the requirements for the Bachelor's degree in ELECTRONICS AND COMMUNICATION ENGINEERING of VISVESVARAYA TECHNOLOGICAL UNIVERSITY, BELAGAVI during the year 2021-2022. It is certified that this Mini Project Report has been approved as it satisfies the academic requirements.

28/7/22		
PROF. POOJA HUGGI	**Dr.MD BAKHAR**	**Dr. DHANAJAY D. MAKTEDAR**
(PROJECT GUIDE)	(HOD ECE)	PRINCIPAL
	Head of E & CE Dept. G.N.D Engineering College BIDAR-585 403. (K.S)	(PRINCIPAL) Guru Nanak Dev Engg. College BIDAR

External Viva

Name of the Examiners	Signature with Date
1) Nitin K	
2) Pavan Mankal	8/7/22

PRINCIPAL
Guru Nanak Dev Engg. College, Bidar

Scanned with OKEN Scanne

ABSTRACT

Security is a main concern in our everyday life. Each and every individual needs to feel secure. An access control for doors forms an essential part in our security pattern. Doors locked using conventional locks are not as safe as they used to be, anyone can break in by breaking these locks. This project to make a framework that will give 24/7 benefit. Password based door lock system allows only approved persons to access restricted areas. This system is fully controlled by Arduino. The password can be entered via a keypad. If the password is matched with the stored password in Arduino the door gets open. This programmed password based bolt framework will give client more secure and minimal effort method for locking-opening framework. The security door lock automation system promises a bold step to the future where mechanical door locks will be substituted by electronic door locks.

PRINCIPAL
Guru Nanak Dev Engg. College, Bidar

Scanned with OKEN Scanne

VISVESVARAYA TECHNOLOGICAL UNIVERSITY
BELAGAVI, KARNATAKA

GURU NANAK DEV ENGINEERING COLLEGE BIDAR, KARNATAKA

DEPARTMENT OF ELECTRONICS AND COMMUNICATION ENGINEERING

CERTIFICATE

This certified that the preliminary project review report on topic

"FOOTSTEP POWER GENERATION USING PIEZOELECTRIC TRANSDUCER"

A bonafede work carried out by **PREETI (3GN19EC037), SOUMYA (3GN19EC051), SYEDA JAWERIYA (3GN19EC057)**, in partial fulfilment of requirements for the award of the Degree B.E 6th semester course in ELECTRONICS AND COMMUNICATION ENGINEERING by **VISVESVARAYA TECHNOLOGICAL UNIVERSITY BELAGAVI, during The year 2020-2021.**

Prof. Shweta Patil	**Prof. Pooja Huggi**	**Dr. Md Bakhar**
(PROJECT GUIDE)	(PROJECT COORDINATOR)	(HOD ECE)

PRINCIPAL
Guru Nanak Dev Engg. College, Bidar

External Viva

Name of the Examiners	Signature with Date
1).....	.....
2).....	.....

Scanned with OKEN Scanne

ABSTRACT

The electrical power consumption is increasing exponentially. Therefore, the need of a fool-proof and economically viable power generation and distribution system demands a certain interest. This project proposes utilization of human locomotion energy which, although extractable goes mainly to waste. This project proposes a model that uses human walking, jumping and running as a source of energy and store it for essential use. Such a model is apt in a demography that of a country like India which has such a huge pedestrian population. This project illustrates a method for harvesting this human locomotion energy with the use of piezoelectric sensor and demonstrates an application with the stored energy i.e. to charge a mobile phone securely using RFID. The ground reaction force (GRF) exerted from the foot, when converted to voltage by piezoelectric sensors is capable enough to power up a device. Successive exertion leads to aperiodic voltage build up which with proper circuitry can be used to charge a storage battery. The power produced by this technique can also be employed in basic application such as street lighting, notice boards, gyms and other areas of public domain. It also promotes green energy and environment friendly approach towards energy generation. In this paper we have provided the basic concept and design details of this model and a basic implementation of the same.

PRINCIPAL
Guru Nanak Dev Engg. College, Bidar

Scanned with OKEN Scanne

GURU NANAK DEV ENGINEERING COLLEGE BIDAR

DEPARTMENT OF

ELECTRONICS AND COMMUNICATION ENGINEERING

CERTIFICATE

This is to certify that the mini project work entitled "SMART PARKING SYSTEM" is a Bonafide work carried out by SHAKHEEL (3GN19EC047), SYED ADIL HUSSAINI (3GN19EC054), SYED SAJEE (3GN19EC056) in partial fulfilment of the requirements for the Bachelor's degree in ELECTRONICS AND COMMUNICATION ENGINEERING of VISVESVARAYA TECHNOLOGICAL UNIVERSITY, BELAGAVI during the year 2021-2022. It is certified that this Mini Project Report has been approved as it satisfies the academic requirements.

PROF POOJA HUGGI PROJECT GUIDE)	**Dr. MD BAKHAR** (HOD ECE)	**Dr. DHANANJAY. D.** (PRINCIPAL)

External Viva

Name of the Examiners	Signature with Date
1) .....Nitin K.....	.....Nitin 28-7-22
2) .....Pavan Mankal.....	.....Pavan 28.7.22

PRINCIPAL
Guru Nanak Dev Engg. College, Bidar

Scanned with OKEN Scanner

Abstract

Smart car parking project aims at providing a confusion free and easy parking. This project helps the drivers of the cars to park their vehicles with minimum wastage of time with accurate information of the availability of the space to park It includes an Arduino Uno as the microcontroller unit to which the servo motors, LCD display ultrasonic sensors (HC-05) are interfaced. The LCD displays the availability of the space, the ultrasonic sensors keeps the check of the number of cars entering andexiting the parking space. The ultrasonic sensors detect the availability of the parking space. To enhance the security system in the world, it is important to monitor and control the access of vehicles in the parking areas of Government and private sector. The Ultrasonic Range Detection Sensor is utilized with Arduino to indicate the empty slot .By measuring the distance using ultrasonic sensor drivers are able to find the empty. The paper additionally depicts an abnormal state perspective of the framework engineering. Towards the end, the paper examines the working of the framework in type of an utilization case that demonstrates the rightness of the proposed show. The Ultrasonic Range Detection Sensor is utilized with Arduino to indicate the empty slot .By measuring the distance using ultrasonic sensor drivers are able to find the empty slot in parking to park the car and help the driver to find the slot easily and reduce the searching time .As the parking place is found to be empty it is detected using ultrasonic sensors which report it further. We achieved this by programming the sensors and Arduino.

PRINCIPAL
Guru Nanak Dev Engg. College, Bidar

Scanned with OKEN Scanne

VISVESVARAYA TECHNOLOGICAL UNIVERSITY,BELAGAVI

BIDAR-585403, KARNATAKA

GURU NANAK DEV ENGINEERING COLLEGE,

DEPARTMENT OF COMPUTER SCIENCE ANDENGINEERING

CERTIFICATE

This is to certify that the mini project work entitled **"CRIMINALS REGISTRATION SYSTEM FOR POLICE DEPARTMENT"** is a bonafide work carried out by **KALYAN KUMAR(3GN18CS039)** in the partial fulfillment of the requirements for the **Bachelor's** degree in Computer Science and Engineering of the **Vishvesvaraya Technological** University, Belagavi during the academic year 2021-2022.

21/1/2022

Signature of Guide
Prof. Ashwini Mankal

Signature of H.O.D
Prof. Dr Dayanand J

EXTERNAL VIVA:

Examiners: 1) ..... **2)** .....

PRINCIPAL
Guru Nanak Dev Engg. College, Bidar

ABSTRACT

The "Crime Management System" is a web based application for online complaining and computerized management of crime records. Here in this website a person who wishes to file a complaint or report an incident must register before log in and once the admin authenticates the user he or she can login into the website and file a complaint .This complaint will be received by police and police can send a message regarding status of the complaint to the user who filed the complaint. Police can use this software to manage different crimes and some of the works which is done in police station manually. Police gets their login password from admin directly. Some of the modules like unidentified dead bodies, missing persons, and most wanted criminals can be viewed through the website without logging in. So this website helps police to find out the problems in the society without them actually coming to the police station. Key Words: FIR-First Information Report

PRINCIPAL
Guru Nanak Dev Engg. College, Bidar

VISVESVARAYA TECHNOLOGICAL UNIVERSITY, BELAGAVI
GURU NANAK DEV ENGINEERING COLLEGE

BIDAR-585403, KARNATAKA

DEPARTMENT OF COMPUTER SCIENCE AND ENGINEERING

CERTIFICATE

This is to certify that the mini project work entitled **"COLLEGE MANAGEMENT SYSTEM"** is a bonafied work carried out by **AMBIKA** (3GN18CS012)in partial fulfilment of the requirements for the Bachelor's degree in COMPUTER SCIENCE AND ENGINEERING of VISVESVARAYA TECHNOLOGICAL UNIVERSITY, BELAGAVI during the year 2021-2022. It is certified that this Mini Project Report has been approved as it satisfies the academic requirements.

21/1/2022

SIGNATURE OF GUIDE	SIGNATURE OF EXTERNAL	SIGNATURE OF HOD

Head of Computer Science & Engineering Department, Guru Nanak Dev Engineering College BIDAR-585 403 (Karnataka)

PRINCIPAL
Guru Nanak Dev Engg. College, Bidar

ABSTRACT

College Management System deals with all kind of student details, academic related reports, college details, course details, curriculum, batch details and other resource related details too. It tracks all the details of a student from the day one to the end of his course which can be used for all reporting purpose, tracking of attendance, progress in the course, completed semesters years, coming semester year curriculum details, exam details, project or any other assignment details, final exam result; and all these will be available for future references too.Our program will have the databases of Courses offered by the college under all levels of graduation or main streams, teacher or faculty's details, batch execution details, students' details in all aspects.This program can facilitate us explore all the activities happening in the college, even we can get to know which teacher / faculty is assigned to which batch, the current status of a batch, attendance percentage of a batch and upcoming requirements of a batch. Different reports and Queries can be generated based of vast options related to students, batch, course, teacher / faculty, exams, semesters, certification and even for the entire college.

PRINCIPAL
Guru Nanak Dev Engg. College, Bidar

GURU NANAK DEV ENGINEERING COLLEGE

DEPARTMENT OF COMPUTER SCIENCE AND ENGINEERING

BIDAR-585403

Certificate

Certified that the Mini Project Work Project Work entitled "FARM MANAGEMENT SYSTEM" carried out by ASFA SHARIYA(3GN19CS016), MD MAQSOOD ALI(3GN19CS040), MOHD AKIFUDDIN(3GN19CS049), MOHD ARBAZ(3GN19CS050) Bona fide students of "GURU NANAK DEV ENGINEERING COLLEGE" in partial fulfilment for the 5TH SEM of Bachelor of Engineering degree in CSE of Visvesvaraya Technological University, Belagavi during the academic year 2021-2022. It is certified that all corrections/suggestions indicated for Internal Assessment have been incorporated in the report deposited in the department library. The project report has been approved as it satisfies the academic requirements in respect of DBMS Laboratory with Mini Project(18CSL58) prescribed for the said Degree.

21/1/22

Signature of guide
Prof. ASHWINI MANKAL

Signature of HOD
Dr. DAYANAND J

Head of Computer Science & Engineering Department, Guru Nanak Dev Engineering College BIDAR-585 403 (Karnataka)

EXTERNAL EXAMINATION

Name of the Examiners

Signature with date

1.

2.

PRINCIPAL
Guru Nanak Dev Engg. College, Bidar

ABSTRACT

The agro marketing strategic vision and effectiveness can be achieved with electronic commerce-related concepts , guidelines and tools are applied as directed by a thorough and systematic approach. The site helps the farmers to sell their perishable agricultural product online and suggests best-in-practice farming processes. It providing a wider market and helping them to not restrict themselves to the local market . it helps the wholesalers and retailers in buying produce from a large number of farmers. It enables wholesalers and retailers in expanding their business. It features online shopping for farming commodities fertilizers, pesticides, machinery & tools, etc. It helps the farmers to keep track of their production with features such as virtual calendar, forecasting, etc. and enables them to hire labourers to find small jobs by having a work profile in the website. The aim is to automate its existing manual system by the help of computerized equipment and full-fledged computer software, fluffing their requirements, so that their valuable data/information can be stored for a longer period with easy accessing and manipulation of the same. Basically the project describes how to manage for good performance and better services for the clients.

PRINCIPAL
Guru Nanak Dev Engg. College, Bidar

GURU NANAK DEV ENGINEERING COLLEGE

DEPARTMENT OF COMPUTER SCIENCE AND ENGINEERING

BIDAR-585403

CERTIFICATE

Certified that the Mini Project Work Project Work entitled "PACMAN" carried out by HASAN(3GN19CS030), MAHEK SULTANA(3GN19CS035), MALIHA NISHAT(3GN19CS037), MD SAQLAIN SAEED(3GN19CS042) Bonafide students of "GURU NANAK DEV ENGINEERING COLLEGE" in partial fulfilment for the 6TH SEM of Bachelor of Engineering degree in CSE of Visveswaraya Technological University, Belagavi during the academic year 2021-2022.

Signature of guide
Prof. MASRATH BEGUM

Signature of HOD
Dr. DAYANAND J

EXTERNAL EXAMINATION

Name of the Examiners | Signature with date

1. 20/7/22
2. 20/7/22

PRINCIPAL
Guru Nanak Dev Engg. College, Bidar

ABSTRACT

- Main aim of this Mini Project is to illustrate the concepts and usage of pre-built functions in OpenGL.
- Creating objects and games like PacMan using Opengl library.
- When the location of PacMan is in + or – 10 pixels range of round spears the spears of that location are translated out of view port which creates an illusion as if PacMan has eaten that object.
- When location of PacMan is in range of rotating blades, then the looping function is changed.
- We have used input devices like mouse and key board to interact with program

VISVESVARAYA TECHNOLOGICAL UNIVERSITY,BELAGAVI

BIDAR-585403, KARNATAKA

GURU NANAK DEV ENGINEERING COLLEGE,

DEPARTMENT OF COMPUTER SCIENCE ANDENGINEERING

CERTIFICATE

This is to certify that the mini project work entitled **"CRIMINALS REGISTRATION SYSTEM FOR POLICE DEPARTMENT"** is a bonafide work carried out by **ANKUSH KANJIKAR (3GN19CS014)** in the partial fulfillment of the requirements for the **Bachelor' s degree in** Computer Science and Engineering of the **Vishvesvaraya Technological University, Belagavi** during the academic year 2021-2022.

21/01/2022

.....

Signature of Guide
Prof. Ashwini Mankal

.....

Signature of H.O.D
Prof. Dr Dayanand J

EXTERNAL VIVA:

Examiners: 1) ..... 2) .....

PRINCIPAL
Guru Nanak Dev Engg. College, Bidar

ABSTRACT

The "Crime Management System" is a web based application for online complaining and computerized management of crime records. Here in this website a person who wishes to file a complaint or report an incident must register before log in and once the admin authenticates the user he or she can login into the website and file a complaint .This complaint will be received by police and police can send a message regarding status of the complaint to the user who filed the complaint. Police can use this software to manage different crimes and some of the works which is done in police station manually. Police gets their login password from admin directly. Some of the modules like unidentified dead bodies, missing persons, and most wanted criminals can be viewed through the website without logging in. So this website helps police to find out the problems in the society without them actually coming to the police station. Key Words: FIR-First Information Report

PRINCIPAL
Guru Nanak Dev Engg. College, Bidar

GURU NANAK DEV ENGINEERING COLLEGE BIDAR

DEPARTMENT OF COMPUTER SCIENCE & ENGINEERING

CERTIFICATE

This is to certify that the project work entitled "**Railway Reservation**" has been successfully carried out by Akhilesh 3GN19CS005, Aman 3GN19CS009, Akash.J 3GN19CS004, B. Abhijeet 3GN19CS022, **Guru Nanak Dev Engineering College** in partial fulfilments of the requirements for the 5th semester in **Bachelor of Engineering in Computer science and Engineering** of **Visvesvaraya Technological University, Belagavi** during academic year 2021-2022. The project report has been approved as it satisfies the academic requirements in respect of project work for the said degree.

21/1/2022

Prof. Ashwini Mankal

PROJECT GUIDE

Dr. Dayanand J.

HOD

Examiner's Signatures:

1.

2.

Head of Computer Science & Engineering Department, Guru Nanak Dev Engineering College, BIDAR-585 403 (Karnataka)

PRINCIPAL
Guru Nanak Dev Engg. College, Bidar

ABSTRACT

The Railway Reservation System facilitates the passengers to enquire about the trains available on the basis of source and destination, Booking and Cancellation of tickets, enquire about the status of the booked ticket, etc. The aim of case study is to design and develop a database maintaining the records of different trams, train status, and passengers

This project contains Introduction to the Railways reservation system .It is the computerized system of reserving the seats of train seats in advanced. It is mainly used for long route. On-line reservation has made the process for the reservation of seats very much easier than ever before

In our country India, there are number of counters for the reservation of the seats and one can easily make reservations and get tickets. Then this project contains entity relationship model diagram based on railway reservation system and introduction to relation model. There is also design of the database of the railway reservation system based on relation model. Example of some SQL queries to retrieves data from rail management database.

PRINCIPAL
Guru Nanak Dev Engg. College, Bidar

VISVESVARAYA TECHNOLOGICAL UNIVERSITY, BELAGAVI

GURU NANAK DEV ENGINEERING COLLEGE, BIDAR-585403, KARNATAKA

DEPT. OF COMPUTER SCIENCE AND ENGINEERING

CERTIFICATE

This is to certify that the mini project work entitled **"TOURISM MANAGEMENT SYSTEM"** is a bonafide work carried out by AISHWARYA (3GN19CS002), ANAMIKA (3GN19CS012), B SHIVANI (3GN19CS018), CHAITANYA (3GN19CS023) in partial fulfillment of the requirements for the award B.E in computer science and engineering by visvesvaraya technological university, belagavi during academic year 2021-2022. It is certified that the mini project report has been approved as it satisfies the academic requirements in respect of the mini project work prescribed for B.E.

21/1/2022

Signature of guide

Prof. ASHWINI MANKAL

Signature of HOD

Dr. DAYANAND
Head of Computer Science & Engineering Department,
Guru Nanak Dev Engineering College,
BIDAR-585 403 (Karnataka)

EXAMINER 1:

EXAMINER 2:

PRINCIPAL
Guru Nanak Dev Engg. College, Bidar

ABSTARCT

As the name specific **"TOURISM MANAGEMENT SYSTEM"** is a software developed for managing tour booking. Identification of the drawback of the existing system leads to the designing of the computerized system that will be compatible to the existing system with the system which is more user friendly and more GUI oriented.

We can improve the efficiency of the system, thus overcome the drawbacks of the existing system. Less human error. Strength and strain of manual labor can be reduced.

High Security, Data Redundancy can be avoided to some extent. Data consistency, Easy to handle, Easy data updating, Easy record keeping, Backup data can be easy generated.

VISVESVARAYATECHNOLOGICALUNIVERSITY,BELAGAVI

GURUNANAKDEVENGINEERINGCOLLEGE,

BIDAR-585403,KARNATAKA

DEPARTMENTOFCOMPUTERSCIENCEANDENGINEERING

CERTIFICATE

Thisistocertify thattheminiproject work entitled**"TAJ MAHAL ANIMATION"**isabonafideworkcarriedoutby **MDNOUMANALI KHAN(3GN19CS041) , MD IRSHAD HUSSAIN(3GN19CS039) , MD SOHEL(3GN18CS061)**in partial fulfillment ofthe requirements for theBachelor'sdegreeinComputerScienceandEngineeringofthe Visvesvaraya Technological University, Belagavi during theacademicyear 2021-2022.

SignatureofGuide
Prof.Masrath Begum

Signature of HOD
Prof.DAYANANDJ

Examiner'sSignatures:

1. 20/7/22
2. 20/7/22

PRINCIPAL
Guru Nanak Dev Engg. College, Bidar

ABSTRACT

Computer Graphics has grown into a very important topic in the branch of ComputerScience. This is due to an effective and rapid communication formed between man and themachine. Human eye can absorb the information in a displayed diagram or perspective diagrammuch fasterthan it can scan apageor atableof contents.

This project " **TAJ MAHAL ANIMATION** " demonstrates the creation of variouspolygons by giving the number of vertices as input. The user is also given the option to see thepolygon from different views. OpenGL is used to make this possible by virtue of its variousfunctionalities.

Wecangeneratesimplegeometricfigureslikethriangle,square,circleandvariouspolygonsbygivingthenumberofsidesfromusersinput.Polygonsliketriangle,square,pentagonandsooncanbegeneratedwithease.Wealsoincludetiltingandmovingpropertiesforthevariouspolygons.

The code implemented makes use of various OpenGL functions for translation, rotationand keyboard callback function, built-in functions for solids and many more. The concepts ofcomputergraphicsstandabackbonetoachievetheaforementionedidea.Primitivedrawing,eventdriven interactions and basic animation have been the important concepts brought out by thisapplication.

Thereportischalkedoutintosectionsdescribingthebasicrequirementssupersededbythebriefing on functions used. Following this, the detailed description of how the implementation isdone effectively using these functions and C language is presented. The source code is providedalong with necessary commentsto enhance readability of code. The screenshots have beenprovidedforameliorationofourlittleeffort.

PRINCIPAL
Guru Nanak Dev Engg. College, Bidar

GURU NANAK DEV ENGINEERING COLLEGE

DEPARTMENT OF COMPUTER SCIENCE AND ENGINEERING

BIDAR-585403

Certificate

Certified that the Mini Project Work Project Work entitled"DAILY BUDGET & EXPENSE MANAGEMENT SYSTEM"carriedout by M AKASH KUMAR (3GN18CS047) Bonafide students of "GURU NANAK DEV ENGINEERING COLLEGE"in partial fulfilment for the 5TH SEM of Bachelor ofEngineering degree in CSE ofVisvesvaraya Technological University, Belagavi during theacademic year 2021-2022. It is certified that all corrections/suggestions indicated for InternalAssessment have been incorporated in the report deposited in the department library. The projectreport has been approved as it satisfies the academic requirements in respect of DBMS Laboratorywith Mini Project(18CSL58) prescribed for the said Degree.

Signature of guide
Prof. ASHWINI MANKAL

Signature of HOD
Dr. DAYANAND J

EXTERNAL EXAMINATION

Name of the Examiners

Signature with date

1.

2. 31/3/22

PRINCIPAL
Guru Nanak Dev Engg. College, Bidar

ABSTRACT

Personal Expense Tracker (PET) is a daily expense management system which is specially designed for non- salaried and salaried personnel for keeping track of their daily expenditure with easy and effective way through computerized system which tends to eliminate manual paper works. It will also manage records in systematic way and user can access the stored data conveniently.

We have tried to design the project in such way that user may not have any difficulty in using this application without much effort. This software can be really used by end user who have Android running devices with them. The language that we use to develop this system is Java and SQLite for database.

PRINCIPAL
Guru Nanak Dev Engg. College, Bidar

VISVESVARAYATECHNOLOGICALUNIVERSITY,BELAGAVI

GURUNANAKDEVENGINEERINGCOLLEGE,

BIDAR-585403,KARNATAKA

DEPARTMENTOFCOMPUTERSCIENCEANDENGINEERING

CERTIFICATE

Thisistocertify thattheminiproject work entitled**"TAJ MAHAL ANIMATION"**isabonafideworkcarriedoutby , **MD NOUMAN ALI KHAN(3GN19CS041)** in partial fulfillment ofthe requirements for theBachelor'sdegreeinComputerScienceandEngineeringofthe **Visvesvaraya Technological University, Belagavi** during theacademicyear 2021-2022.

SignatureofGuide
Prof.Masrath Begum

Signature of HOD
Prof.DAYANANDJ

Examiner'sSignatures:

1. 20/7/22
2. 20/7/22

PRINCIPAL
Guru Nanak Dev Engg. College, Bidar

ABSTRACT

Computer Graphics has grown into a very important topic in the branch of ComputerScience. This is due to an effective and rapid communication formed between man and themachine. Human eye can absorb the information in a displayed diagram or perspective diagrammuch fasterthan it can scan apageor atableof contents.

This project " **TAJ MAHAL ANIMATION** " demonstrates the creation of variouspolygons by giving the number of vertices as input. The user is also given the option to see thepolygon from different views. OpenGL is used to make this possible by virtue of its variousfunctionalities.

Wecangeneratesimplegeometricfigureslikeetriangle,square,circleandvariouspolygonsbygivingthenumberofsidesfromusersinput.Polygonsliketriangle,square,pentagonandsooncanbegeneratedwithease.Wealsoincludetiltingandmovingpropertiesfortheviouspolygons.

The code implemented makes use of various OpenGL functions for translation, rotationand keyboard callback function, built-in functions for solids and many more. The concepts ofcomputergraphicsstandabackbonetoachievetheaforementionedidea.Primitivedrawing,eventdriven interactions and basic animation have been the important concepts brought out by thisapplication.

Thereportischalkedoutintosectionsdescribingthebasicrequirementssuperseded bythebriefing on functions used. Following this, the detailed description of how the implementation isdone effectively using these functions and C language is presented. The source code is providedalong with necessary commentsto enhance readability of code. The screenshots have beenprovidedforamelioratioofourlittleeffort.

PRINCIPAL
Nanak Dev Engg. College, Bidar

GURU NANAK DEV ENGINEERING COLLEGE

DEPARTMENT OF COMPUTER SCIENCE AND ENGINEERING

BIDAR-585403

CERTIFICATE

Certified that the Mini Project Work Project Work entitled "PACMAN" carried out by HASAN(3GN19CS030), MAHEK SULTANA(3GN19CS035), MALIHA NISHAT(3GN19CS037), MD SAQLAIN SAEED(3GN19CS042) Bonafide students of "GURU NANAK DEV ENGINEERING COLLEGE" in partial fulfilment for the 6TH SEM of Bachelor of Engineering degree in CSE of Visvesvaraya Technological University, Belagavi during the academic year 2021-2022.

Signature of guide
Prof. MASRATH BEGUM

Signature of HOD
Dr. DAYANAND J

EXTERNAL EXAMINATION

Name of the Examiners	Signature with date
1.	20/7/22
2.	20/7/22

PRINCIPAL
Guru Nanak Dev Engg. College, Bidar

ABSTRACT

- Main aim of this Mini Project is to illustrate the concepts and usage of pre-built functions in OpenGL.
- Creating objects and games like PacMan using Opengl library.
- When the location of PacMan is in + or – 10 pixels range of round spears the spears of that location are translated out of view port which creates an illusion as if PacMan has eaten that object.
- When location of PacMan is in range of rotating blades, then the looping function is changed.
- We have used input devices like mouse and key board to interact with program

PRINCIPAL
Guru Nanak Dev Engg. College, Bidar

DEPT. OF COMPUTER SCIENCE AND ENGINEERING

CERTIFICATE

This is to certify that the mini project work entitled "**RESTAURANT MANAGEMENT SYSTEM**" is a bonafide work carried out by AMULYA RATNA.J(3GN19CS011), NEHA MASHETTY (3GN19CS059), ABDUL ANAS UMAR(3GN19CS001)MD.NOUMAN ALI KHAN (3GN19CS041) MD IRSHAD HUSSIAN(3GN19CS039) in partial fulfillment of the requirements for the award of B.E. in Computer Science and Engineering by Visvesvaraya Technological University, Belagavi during Academic year 2018-2019. It is certified that mini project report has been approved as it satisfies the academic requirements in respect of the mini project work prescribed for B.E

21/1/2022

Signature of guide

Prof. ASHWINI MANKAL

Examiner 1:

Examiner 2:

Signature of HOD

Dr. DAYANAND J

Head of Computer Science & Engineering Department,
Guru Nanak Dev Engineering College,
BIDAR-585 403 (Karnataka)

PRINCIPAL

Guru Nanak Dev Engg. College, Bidar

Abstract

The restaurant management software is a capstone project that aims towards developing an all-in-one application that addresses the various problems and challenges faced by high-end restaurant owners today . In order to achieve this goal, this project addresses various aspects of the modern business . It allows its users to access a variety of functionalities that are essential to the culinary business . Given that this project encapsulates more than one interface, it is by nature rich when it comes to the number of functionalities that are offered and these vary depending on the user's role. For example, it allows the waiter to take user orders through a straightforward, user-friendly, and smooth interface . All in all, this projects main aim is to reduce the time overhead in highend management restaurants by providing an alternative to the traditional management system based on physical record keeping and paper work.

PRINCIPAL
Guru Nanak Dev Engg. College, Bidar

VISVESVARAYA TECHNOLOGICAL UNIVERSITY, BELAGAVI

GURU NANAK DEV ENGINEERING COLLEGE, BIDAR

DEPT. OF COMPUTER SCIENCE AND ENGINEERING

CERTIFICATE

This is to certify that the mini project work entitled " HELICOPTER GAME" is a bonafide work carried out by **GURPREET SINGH (3GN19CS029)** in partial fulfillment of the requirements for the **Bachelor's degree** in **Computer Science and Engineering** of the **Visvesvaraya Technological University, Belagavi** during the academic year 2021-2022.

Signature of Guide
Prof. MASARATH BEGUM

Signature of HOD
Prof. DAYANAND J

Examiner's Signatures:

1.

2.

PRINCIPAL
Guru Nanak Dev Engg. College, Bidar

ABSTRACT

A 2D graphics based game helicopter is a great start for a student who starts learning computer graphics & visualization. The development of the game has large scope to learn computer graphics from scratch. We used OpenGL utility toolkit to implement the algorithm, written it in c++ language.

There is still scope left in the development of project like, after "game over" a list should show top ten scorers, a need to embed a button "play again". Welcome screen need more modification there is scope of embedding buttons like "about", "how to play", "configuration", "profiles", etc. In future we hope we would implement it in source code for better experience of playing this game.

Finally, we could say by developing the game we have learnt the basics of f computer graphics and in future by developing it further we shall learn more. It will be our pleasure if we could develop in 3d graphics package.

PRINCIPAL
Guru Nanak Dev Engg. College, Bidar

GURU NANAK DEV ENGINEERING COLLEGE BIDAR

DEPARTMENT OF COMPUTER SCIENCE & ENGINEERING

CERTIFICATE

This is to certify that the project work entitled "**Railway Reservation**" has been successfully carried out by Akhilesh 3GN19CS005, Aman 3GN19CS009, Akash.J 3GN19CS004, B. Abhijeet 3GN19CS022, **Guru Nanak Dev Engineering College** in partial fulfilments of the requirements for the 5th semester in **Bachelor of Engineering in Computer science and Engineering** of **Visvesvaraya Technological University, Belagavi** during academic year 2021-2022. The project report has been approved as it satisfies the academic requirements in respect of project work for the said degree.

Prof. Ashwini Mankal	Dr. Dayanand J.
PROJECT GUIDE	**HOD**
	Head of Computer Science & Engineering Department, Guru Nanak Dev Engineering College G.N.D.E.C. BIDAR 585 403 (Karnataka)

Examiner's Signatures:

1.

2.

PRINCIPAL
Guru Nanak Dev Engg. College, Bidar

ABSTRACT

The Railway Reservation System facilitates the passengers to enquire about the trains available on the basis of source and destination, Booking and Cancellation of tickets, enquire about the status of the booked ticket, etc. The aim of case study is to design and develop a database maintaining the records of different trams, train status, and passengers

This project contains Introduction to the Railways reservation system .It is the computerized system of reserving the seats of train seats in advanced. It is mainly used for long route. On-line reservation has made the process for the reservation of seats very much easier than ever before

In our country India, there are number of counters for the reservation of the seats and one can easily make reservations and get tickets. Then this project contains entity relationship model diagram based on railway reservation system and introduction to relation model. There is also design of the database of the railway reservation system based on relation model. Example of some SQL queries to retrieves data from rail management database.

PRINCIPAL
Guru Nanak Dev Engg. College, Bidar

VISVESVARAYA TECHNOLOGICAL UNIVERSITY, BELAGAVI

GURU NANAK DEV ENGINEERING COLLEGE, BIDAR-585403, KARNATAKA

DEPT. OF COMPUTER SCIENCE AND ENGINEERING

CERTIFICATE

This is to certify that the mini project work entitled **"TOURISM MANAGEMENT SYSTEM"** is a bonafide work carried out by ANAMIKA (3GN19CS012) in partial fulfillment of the requirements for the award B.E in computer science and engineering by visvesvaraya technological university, belagavi during academic year 2021-2022. It is certified that the mini project report has been approved as it satisfies the academic requirements in respect of the mini project work prescribed for B.E.

21/1/2022

Signature of guide

Prof. ASHWINI MANKAL

Signature of HOD

Dr. DAYANAND
Head of Computer Science & Engineering Department,
Guru Nanak Dev Engineering College,
BIDAR-585 403 (Karnataka)

EXAMINER 1:

EXAMINER 2:

PRINCIPAL
Guru Nanak Dev Engg. College, Bidar

ABSTARCT

As the name specific **"TOURISM MANAGEMENT SYSTEM"** is a software developed for managing tour booking. Identification of the drawback of the existing system leads to the designing of the computerized system that will be compatible to the existing system with the system which is more user friendly and more GUI oriented.

We can improve the efficiency of the system, thus overcome the drawbacks of the existing system. Less human error. Strength and strain of manual labor can be reduced.

High Security, Data Redundancy can be avoided to some extent. Data consistency, Easy to handle, Easy data updating, Easy record keeping, Backup data can be easy generated.

PRINCIPAL
Guru Nanak Dev Engg. College, Bidar

VISVESVARAYA TECHNOLOGICAL UNIVERSITY,

BELAGAVI

BIDAR-585403, KARNATAKA

GURU NANAK DEV ENGINEERING COLLEGE,

DEPARTMENT OF COMPUTER SCIENCE AND ENGINEERING

CERTIFICATE

This is to certify that the mini project work entitled **"ZOO MANAGEMENT SYSTEM"** is a bonafide work carried out by **ANJALI JAINAPURE(3GN19CS013)** in the partial fulfillment of the requirements for the **Bachelor's degree** in **Computer Science and Engineering** of the **Vishvesvaraya Technological University, Belagavi** during the academic year 2021-2022.

21/1/2022

.....

SignatureofGuide

H.O.DProf.ASHWINI MANKAL

.....

Signature of

Prof.DR. DEVANAND L

Head of Computer Science & Engineering Department, Guru Nanak Dev Engineering College BIDAR-585 403 (Karnataka)

EXTERNAL VIVA:

Examiners: 1) ..... 2).... .....

PRINCIPAL

Guru Nanak Dev Engg. College, Bidar

ABSTRACT

Our project "ZOO MANAGEMENT SYSTEM" is related to online application of Zoo Management.Zoo Management system is a solution for the effective management of the tickets and to maintain the data of all the visitors.There is a admin login through which the details of all the customers can be added into the database.The front page displays all the animals and their cage numbers which they are present in.The contact information of both the admins is available so that the visitor can interact with the admin if there's any problem regarding the tickets and the zoo animals. Managing a zoo requires balancing the provision of excellent animal management and care with an optimal visitor experience and quality customer service. In addition to standard business management practices, zoos also need to consider the extra element of collection planning. Institutional collection plan" is used to decide on which species are kept at the zoo. Animal welfare: Of course, a decent zoo meets animals' basic needs: appropriate food, fresh water, proper exposure to light. Animals have enclosures that are clean, roomy enough—for flying or running, swimming or climbing—and include features that mimic conditions in the wild.ZIMS was developed as a secured database related to visitors' entry tickets, to keep and maintain the animals' details (birth, death & updates) without manual effort and to store papers. Reducing usage of papers helps to keep green environment.

PRINCIPAL
Guru Nanak Dev Engg. College, Bidar

VISVESVARAYA TECHNOLOGICAL UNIVERSITY, BELAGAVI

GURU NANAK DEV ENGINEERING COLLEGE

BIDAR-585403, KARNATAKA

DEPARTMENT OF COMPUTER SCIENCE AND ENGINEERING

CERTIFICATE

This is certified that the mini project work entitled **"DISTANCE STUDIES ONLINE EDUCATION SYSTEM"** is a Bonafede work carried out by **AKANKSHA (3GN19CS003), KRUPA (3GN19CS033), NAGESHWARI (3GN19CS055), NIKITA (3GN19CS060)** in partial fulfillment of the requirements for the award of B.E in Computer Science and Engineering by the Visvesvaraya Technological University, Belagavi during Academic year 2021 -2022. It is certified that the mini project report has been approved as it satisfies the academic requirements in respect of the mini project work prescribed for the B.E.

21/1/2022

Signature of Guide
Prof. ASHWINI MANKAL

Signature of HOD
Dr. DAYANAND J
Head of Computer Science & Engineering Department,
Guru Nanak Dev Engineering College
BIDAR-585 403 (Karnataka)

NAME OF EXAMINERS

1). _____

2). _____

1) _____

2) _____

PRINCIPAL
Guru Nanak Dev Engg. College, Bidar

ABSTRACT

Online Long-Distance Studies is developed in web-based platform. This project is implemented by taking reference of many online education sites. This web portal is implemented is basic features that are required to provide online education. In present trend usage of internet users are increasing at the same time education through online had become a new trend for sharing knowledge from all around the world.

This application is useful for students from all over the world and communicate with different countries educational institutes and gain knowledge on the subject.

PRINCIPAL
Guru Nanak Dev Engg. College, Bidar

VISVESVARAYA TECHNOLOGICAL UNIVERSITY, BELAGAVI

GURU NANAK DEV ENGINEERING COLLEGE, BIDAR-585403, KARNATAKA

DEPT. OF COMPUTER SCIENCE AND ENGINEERING

CERTIFICATE

This is to certify that the mini project work entitled "RESTAURANT MANAGEMENT SYSTEM" is a bonafide work carried out by Students in partial fulfillment of the requirements for the award B.E in Computer Science and Engineering by Visvesvarya Technological University, Belagavi during academic year 2021-2022. It is certified that the mini project report has been approved as it satisfies the academic requirements in respect of the mini project work prescribed for B.E.

21/1/2022

Signature of guide

Prof. ASHWINI MANKAL

Signature of HOD

Dr. DAYANAND J

Head of Computer Science & Engineering Department, Guru Nanak Dev Engineering College BIDAR - 585 403 (Karnataka)

EXAMINER 1:

EXAMINER 2:

PRINCIPAL

Guru Nanak Dev Engg. College, Bidar

Abstract

The restaurant management software is a capstone project that aims towards developing an all-in-one application that addresses the various problems and challenges faced by high-end restaurant owners today . In order to achieve this goal, this project addresses various aspects of the modern business . It allows its users to access a variety of functionalities that are essential to the culinary business . Given that this project encapsulates more than one interface, it is by nature rich when it comes to the number of functionalities that are offered and these vary depending on the user's role. For example, it allows the waiter to take user orders through a straightforward, user-friendly, and smooth interface . All in all, this projects main aim is to reduce the time overhead in highend management restaurants by providing an alternative to the traditional management system based on physical record keeping and paper work.

PRINCIPAL
Nanak Dev Engg. College, Bidar

2021-22

GURU NANAK DEV ENGINEERING COLLEGE

DEPARTMENT OF COMPUTER SCIENCE AND ENGINEERING

BIDAR-585403

Certificate

Certified that the Mini Project Work Project Work entitled "FARM MANAGEMENT SYSTEM" carried out by SYED JUNAID AMED 3GN18CS110 Bonafide student of "GURU NANAK DEV ENGINEERING COLLEGE- in partial fulfilment for the 5TH SEM of Bachelor of Engineering degree in CSE of Visvesvaraya Technological University, Belagavi during the academic year 2021-2022. It is certified that all corrections/suggestions indicated for Internal Assessment have been incorporated in the report deposited in the department library. The project report has been approved as it satisfies the academic requirements in respect of DBMS Laboratory with Mini Project(18CSL58) prescribed for the said Degree.

Signature of guide
Prof. SURESH CHIMKODE

Signature of HOD
Dr. DAYANAND J

EXTERNAL EXAMINATION

Name of the Examiners

Signature with date 1.

2.

2

PRINCIPAL
Guru Nanak Dev Engg. College, Bidar

ABSTRACT

The agro marketing strategic vision and effectiveness can be achieved with electronic commerce-related concepts , guidelines and tools are applied as directed by a thorough and systematic approach. The site helps the farmers to sell their perishable agricultural product online and suggests best-in-practice farming processes. It providing a wider market and helping them to not restrict themselves to the local market . it helps the wholesalers and retailers in buying produce from a large number of farmers. It enables wholesalers and retailers in expanding their business. It features online shopping for farming commodities fertilizers, pesticides, machinery & tools, etc. It helps the farmers to keep track of their production with features such as virtual calendar, forecasting, etc. and enables them to hire labourers to find small jobs by having a work profile in the website. The aim is to automate its existing manual system by the help of computerized equipment and full-fledged computer software, fluffing their requirements, so that their valuable data/information can be stored for a longer period with easy accessing and manipulation of the same. Basically the project describes how to manage for good performance and better services for the clients.

PRINCIPAL
Guru Nanak Dev Engg. College, Bidar

GURU NANAK DEV ENGINEERING COLLEGE, BIDAR-585403, KARNATAKA

DEPARTMENT OF COMPUTER SCIENCE AND ENGINEERING

CERTIFICATE

This is certified that the mini project work entitled "COURIER MANAGEMENT SYSTEM" is a bonafide work carried out by Aleena(3GN19CS008) in partial fulfillment of the requirements for the award of B.E in computer science and Engineering by the Visvesvaraya Technological University, Belgavi during academic year 2021-2022. It is cerified that the mini project has been approved as it satisfies the academic requirements in respect of the mini project work prescribed for the B.E.

Signature of Guide
Prof.ASHWINI MANKAL

Signature of HOD
Dept. of Computer Science & Engineering Department,
Guru Nanak Dev Engineering College
BIDAR-585 403 (Karnataka)
Dr. DAYANAND V
SIGNATURE WITH DATE

NAME OF EXAMINERS

21/1/2022

PRINCIPAL
Guru Nanak Dev Engg. College, Bidar

ABSTRACT

The objective of this courier management system is to reduce the day to day work hectic by automating all the manual work of courier related organizations into computer based work. Courier management system aims at keeping the track of employee information, apart from this details about day to day courier senders, receivers, courier men, hub details and prices and products which are sending using courier services. Also it keeps the track of all the companies that uses courier services daily or most frequently in order to give them special discount so that they can use their services daily.

All the database with a backup is being stored into the server of the system. This reduce the man power and increase the efficiency of the work demands.

PRINCIPAL
Guru Nanak Dev Engg. College, Bidar

GURU NANAK DEV ENGINEERING COLLEGE BIDAR

DEPARTMENT OF COMPUTER SCIENCE & ENGINEERING

CERTIFICATE

This is to certify that the project work entitled **"Railway Reservation"** has been successfully carried out by Akhilesh 3GN19CS005, Aman 3GN19CS009, Akash.J 3GN19CS004, B. Abhijeet 3GN19CS022, **Guru Nanak Dev Engineering College** in partial fulfilments of the requirements for the 5th semester in **Bachelor of Engineering in Computer science and Engineering** of **Visvesvaraya Technological University, Belagavi** during academic year 2021-2022. The project report has been approved as it satisfies the academic requirements in respect of project work for the said degree.

21/1/2022

Prof. Ashwini Mankal

PROJECT GUIDE

Dr. Dayanand J.

HOD

Head of Computer Science & Engineering Department, Guru Nanak Dev Engineering College BIDAR-585 403 (Karnataka)

Examiner's Signatures:

1.

2.

PRINCIPAL
Guru Nanak Dev Engg. College, Bidar

ABSTRACT

The Railway Reservation System facilitates the passengers to enquire about the trains available on the basis of source and destination, Booking and Cancellation of tickets, enquire about the status of the booked ticket, etc. The aim of case study is to design and develop a database maintaining the records of different trams, train status, and passengers

This project contains Introduction to the Railways reservation system .1t is the computerized system of reserving the seats of train seats in advanced. It is mainly used for long route. On-line reservation has made the process for the reservation of seats very much easier than ever before

In our country India, there are number of counters for the reservation of the seats and one can easily make reservations and get tickets. Then this project contains entity relationship model diagram based on railway reservation system and introduction to relation model. There is also design of the database of the railway reservation system based on relation model. Example of some SQL queries to retrieves data from rail management database.

PRINCIPAL
Guru Nanak Dev Engg. College, Bidar

VISVESVARAYA TECHNOLOGICAL UNIVERSITY,BELAGAVI

BIDAR-585403, KARNATAKA

GURU NANAK DEV ENGINEERING COLLEGE,

DEPARTMENT OF COMPUTER SCIENCE ANDENGINEERING

CERTIFICATE

This is to certify that the mini project work entitled **"CRIMINALS REGISTRATION SYSTEM FOR POLICE DEPARTMENT"** is a bonafide work carried out by **AMISH BEMELKHEDKAR (3GN19CS010)** in the partial fulfillment of the requirements for the **Bachelor's degree** in Computer Science and Engineering of the **Visionariness Technological University,** Belagavi during the academic year2021-2022.

21/1/22

.....

Signature of Guide
Prof. Ashwini Mankal

.....

Signature of H.O.D
Prof. Dr Dayanand J

Head of Computer Science & Engineering Department, Guru Nanak Dev Engineering College BIDAR-585 403 (Karnataka)

EXTERNAL VIVA:

_Examiners: 1) ..... 2) .....

PRINCIPAL
Guru Nanak Dev Engg. College, Bidar

ABSTRACT

The "Crime Management System" is a web based application for online complaining and computerized management of crime records. Here in this website a person who wishes to file a complaint or report an incident must register before log in and once the admin authenticates the user he or she can login into the website and file a complaint .This complaint will be received by police and police can send a message regarding status of the complaint to the user who filed the complaint. Police can use this software to manage different crimes and some of the works which is done in police station manually. Police gets their login password from admin directly. Some of the modules like unidentified dead bodies, missing persons, and most wanted criminals can be viewed through the website without logging in. So this website helps police to find out the problems in the society without them actually coming to the police station. Key Words: FIR-First Information Report

PRINCIPAL
Guru Nanak Dev Engg. College, Bidar

VISVESVARAYA TECHNOLOGICAUNIVERSITY,BELAGAVI

GURU NANAK DEV ENGINEERING COLLEGE

BIDAR-585403, KARNATAKA

DEPARTMENT OF COMPUTER SCIENCE AND ENGINEERING

CERTIFICATE

This is certified that the mini project work entitled **"COMPANY PLACEMENT SUPPORT SERVICES"** is a bonafide work carried out by **PRAVEEN KUMAR (3GN19CS070), SANGAMESH (3GN19CS081), SARABJYOT KAUR(3GN19CS083)** in partial fulfillment of the requirements for the award of B.E in Computer Science and Engineering by the Visvesvaraya Technological University, Belagavi during Academic year 2021 -2022. It is certified that the mini project report has been approved as it satisfies the academic requirements in respect of the mini project work prescribed for the B.E. ~~ECE~~ CSE

Signature of Guide

Signature of HOD

NAME OF EXAMINERS

1) Ashwini M
2) Suresh. C

SIGNATURE WITH DATE

28/3/22

28/03/22

PRINCIPAL
Guru Nanak Dev Engg. College, Bidar

ABSTRACT

Job portal is a web application that provides a platform for candidates seeking job and the employers to share their needs. They enter the job details such that job title, vacancies, last date of application, etc. Then they enter the question paper. It includes the questions, the choices and the correct answer. After the exam has been written by the seekers, the result can be viewed such that the top rankers for the particular exam. In addition, the provider can see the resume details of the particular job applicant. The seekers enter into the web site, create their logins and enter the resume details

PRINCIPAL
Guru Nanak Dev Engg. College, Bidar

DEPARTMENT OF COMPUTER SCIENCE & ENGINEERING

GURU NANAK DEV ENGINEERING COLLEGE,

BIDAR-585403, KARNATAKA

CERTIFICATE

This is to certify that the mini project work entitled "ZOO MANAGEMENT SYSTEM" is a Bonafide work carried out by **SHANTVEER(3GN19CS090), SIDDESHWAR (3GN19CS098), SINDOLU AKASH (3GN19CS099) and RAMKUMAR (3GN19CS076)** in partial fulfilment of the requirements for the Bachelor's degree in Computer Science and Engineering of the Visvesvaraya Technological University, Belagavi during the academic year 2021-2022.

Signature of Guide	**Signature of HOD**
Prof. SURESH CHIMKODE	Dr.Dayanand J

EXTERNAL VIVA:

Examiners:

1) ..... 2) .....

PRINCIPAL
Guru Nanak Dev Engg. College, Bidar

ABSTRACT

- Our project **"ZOO MANAGEMENT SYSTEM"** is related to online application of Zoo Management.
- Zoo Management system is a solution for the effective management of the tickets and to maintain the data of all the visitors.
- There's an. admin login through which the details of all the customers can be added into the database.
- The front page displays all the animals and their cage numbers which they are present in.
- The contact information of both the admins is available so that the visitor can interact with the admin if there's any problem regarding the tickets and the zoo animals.

Project Purpose

This website is a Zoo Management System through which a user can access its information and manage all the adding, updating, deleting the assets and some of its tasks.

Only admin can change the details of the visitors of the Zoo and update their details in the tickets and other database.

This system is very useful for the effective interaction between the zoo people and the visitors and also the tickets can be printed in the PDF format.

The ticket section comprises of different sections which helps distinguish the tickets of adult, teen and men & women.

PRINCIPAL
Guru Nanak Dev Engg. College, Bidar

VISVESVARAYA TECHNOLOGICAUNIVERSITY,BELAGAVI

GURU NANAK DEV ENGINEERING COLLEGE

BIDAR-585403, KARNATAKA

DEPARTMENT OF COMPUTER SCIENCE AND ENGINEERING

CERTIFICATE

This is certified that the mini project work entitled, **"COMPANY PLACEMENT SUPPORT SERVICES"** is a bonafide work carried out by **PRAVEEN KUMAR (3GN19CS070), SANGAMESH (3GN19CS081), SARABJYOT KAUR(3GN19CS083)** in partial fulfillment of the requirements for the award of B.E in Computer Science and Engineering by the Visvesvaraya Technological University, Belagavi during Academic year 2021 -2022. It is certified that the mini project report has been approved as it satisfies the academic requirements in respect of the mini project work prescribed for the B.E. ~~ECE~~ CSE

Signature of Guide

Signature of HOD

NAME OF EXAMINERS

1. Abhishek M
2. Sanjeth. C

SIGNATURE WITH DATE

28/3/22

28/03/22

PRINCIPAL

Guru Nanak Dev Engg. College, Bidar

ABSTRACT

Job portal is a web application that provides a platform for candidates seeking job and the employers to share their needs. They enter the job details such that job title, vacancies, last date of application, etc. Then they enter the question paper. It includes the questions, the choices and the correct answer. After the exam has been written by the seekers, the result can be viewed such that the top rankers for the particular exam. In addition, the provider can see the resume details of the particular job applicant. The seekers enter into the web site, create their logins and enter the resume details

PRINCIPAL
Guru Nanak Dev Engg. College, Bidar

VISVESVARAYA TECHNOLOGICAL UNIVERSITY,

BELAGAVI

BIDAR-585403, KARNATAKA

GURU NANAK DEV ENGINEERING COLLEGE

DEPARTMENT OF COMPUTER SCIENCE AND ENGINEERING

CERTIFICATE

This is to certify that the mini project work entitled **"Vehicle parking management system"** is a bonafide work carried out by PRATIKSHA ULLAGADDI, SHAMBHAVI SHEELVANT, VAISHNAVI CHILLARGE, VARSHITA VANGAPALLI in the partial fulfiment of the requirements for the Bachelor's Degree in Computer Science and engineering of Vieshvesvaraya Technological University, Belagavi during the academic year 2021-2022.

24/01/22

Signature of Guide

Signature of H.O.D

Head of Computer Science & Engineering Department, Guru Nanak Dev Engineering College BIDAR-585 403 (Karnataka)

EXTERNAL **VIVA:**

Examiners: 1)..... 26/3/22 **2)**..... 26/3/22

PRINCIPAL
Guru Nanak Dev Engg. College, Bidar

VEHICLE PARKING MANAGEMENTR SYSTEM

1. ABSTRACT

The online vehicle parking reservation system is system that enables customers/drivers to reserve a parking space. It also allows the customer/drivers to view the parking status at keybando people's park, It was developed because the congestion and collision of the vehicle, the system was developed for kyebando people's park located in kyebando. Therefore the project aimed at solving such problem designing a web based system that will enable the customer driver to make reservation of available parking space at people's park.

The requirements for the developed system were collected using observation and interview the customer and staff members from keybando people's park. The designed system was implemented using different development tools which HTML for creating interface, CSS for styiing wed pages, Java, Script, and jquery for dynaism in the web pages and as input validation tool .XAMMPO was used to cbuild the data base and PHP used as a server side scripting language connect to the user interface to the data base. The system tested by the researches for errors.

PRINCIPAL
Guru Nanak Dev Engg. College, Bidar

VISVESVARAYA TECHNOLOGICAL UNIVERSITY, BELAGAVI

GURU NANAK DEV ENGINEERING COLLEGE, BIDAR-585403, KARNATAKA

DEPT. OF COMPUTER SCIENCE AND ENGINEERING

CERTIFICATE

This is to certify that the mini project work entitled **"Apartment Visitors Management System"** is a bonafide work carried out by Students in partial fulfillment of the requirements for the award B.E in Computer Science and Engineering by Visvesvarya Technological University, Belagavi during academic year 2021-2022. It is certified that the mini project report has been approved as it satisfies the academic requirements in respect of the mini project work prescribed for B.E.

Signature of guide

Prof.SURESH SHIMKODE

Signature of HOD

Dr. DAYANAND J

[illegible] of Computer Science & Engineering Department, Guru Nanak Dev Engineering College, B.V.V.S. [illegible] (Karnataka)

EXAMINER 1: 26/3/22

EXAMINER 2: 26/3/22

PRINCIPAL

Guru Nanak Dev Engg. College, Bidar

APARTMENT VISITORS MANAGEMENT SYSTEM

ABSTRACTION

THE MAIN OBJECTIVE OF THIS PROJECT IS TO ENHANCE THE SAFETY FOR PEOPLE IN THEIR LIVINGS. IN TODAY'S GENERATION, FACE RECOGNITION IS AN IMPORTANT PART FOR THE PURPOSE OF SAFETY, SURVEILLANCE AND SECURITY. THEREFORE WE NEED FOR AN EFFICIENT AND COST EFFECTIVE SYSTEM. INSTEAD APARTMENT VISITOR'S MANAGEMENT SYSTEM WILL ASSIST YOU THE PROFESSIONLIZED WAY IN WHICH YOU WELCOME YOUR VISITORS.THIS SOFTWARE IS IMPROVE THE PRODUCTIVITY AND SECURE FROM THE UNAUTHORIZIED OR UNWANTED VISITORS.

INTRODUCTION

THE APARTMENT VISITORS MANAGEMENT SYSTEM FOR KEEPING THE RECORDS OF VISITOR.ALSO IT DISPLAYS ALL THE VISITORS ENTRY AND OUTGOING RECORDS.THE MAIN OBJECTIVE OF THE PROJECT IS EASILY SEARCH VISITOR THROUGH HIS/HER NAME OR PHONE NUMBER. YOU CAN GET THE HOURS HE/SHE SPENT A PERTICULAR DAY THROUGH THIS SYSTEM.

PRINCIPAL
Guru Nanak Dev Engg. College, Bidar

DEPARTMENT OF COMPUTER SCIENCE AND ENGINEERING

CERTIFICATE

This is certified that the mini project work entitled **"AIRLINE FLIGHT RESERVATION SYSTEM"** is a bonafide work carried out by **TAJINDER SINGH (3GN19CS108), SARABJEET SINGH (3GN18CS088), NISHCHAYPATIL (3GN18CS067), MD MOHIUDDIN KAIF (3GN18CS063)**in partial fulfillment of the requirements for the award of B.E in Computer Science and Engineering by the Visvesvaraya TechnologicalUniversity,BelagaviduringAcademicyear2021-2022.Itiscertifiedthatthemini project report has been approved as it satisfies the academic requirements in respect of the mini project work prescribed for theB.E.

18/1/22

Signature of Guide
Prof. SURESH CHIMKODE

Signature of HOD
Dr. DAYANAND J.
Head of Computer Science & Engineering Department, Guru Nanak Dev Engineering College SIGNATURE WITH DATE

NAMEOFEXAMINERS

1. Suresh. C
2. Ashwini M

1. 28/8/22
2. 28/8/22

PRINCIPAL
Guru Nanak Dev Engg. College, Bidar

ABSTRACT

Airline reservation systems were first introduced in the late 1950s as relatively simple standalone systems to control flight inventory, maintain flight schedules, seat assignmentsand aircraft loading. The modern airline reservation system is comprehensive suite of products to provide a system that assists with a variety of airline management tasks and service customer needs from the time of initial reservation through completion of theflight.

Oneofthemostcommonmodesoftravelistravelingbyair.Customerswhowishtotravelby airnowadayshaveawidevarietyofairlinesandarangeoftimingstochoosefrom.Nowadays competition is so fierce between airlines that there are lot of discounts and a lot of luxuries given to customers that will give an edge to that particularairline.

The WorldWideWebhas becometremendouslypopularoverthelastfouryears,andcurrently most of the airlines have made provision for online reservation of their flights. The Internet has become a major resource for people looking for making reservations online without the hassleofmeetingtravelagents.MyProjectintendstoservethesepurposes.Itintendstocheck all the available airline databases and return a string of results, which can help them in their travelplans.

The objective of this project is to create an airline reservation system where a traveler can request all flight information as per their journey dates. They can get information regarding time, cost, etc all at the same time and place. When the customer calls the Counter Assistant for his/her travel needs, the counter assistant will enter the customer's details (flight requirements) in the system. The system displays all the available airlines, schedules and prices. This system would help the airline to better serve its customers by catering to their needs. The site would use a Database to hold this information as well as the latest pricing and availability information for the airlines.

PRINCIPAL
Guru Nanak Dev Engg. College, Bidar

VISVESVARAYA TECHNOLOGICAL UNIVERSITY, BELAGAVI

GURU NANAK DEV ENGINEERING COLLEGE, BIDAR-585403, KARNATAKA

DEPT. OF COMPUTER SCIENCE AND ENGINEERING

CERTIFICATE

This is to certify that the mini project work entitled **"Apartment Visitors Management System"** is a bonafide work carried out by Students in partial fulfillment of the requirements for the award B.E in Computer Science and Engineering by Visvesvarya Technological University, Belagavi during academic year 2021-2022. It is certified that the mini project report has been approved as it satisfies the academic requirements in respect of the mini project work prescribed for B.E.

Signature of guide
Prof.SURESH SHIMKODE

Signature of HOD
Dr. DAYANAND J

EXAMINER 1: Ashoprii M 28/3/22

EXAMINER 2: Suresh. G 28/3/22

PRINCIPAL
Guru Nanak Dev Engg. College, Bidar

APARTMENT VISITORS MANAGEMENT SYSTEM

ABSTRACTION

THE MAIN OBJECTIVE OF THIS PROJECT IS TO ENHANCE THE SAFETY FOR PEOPLE IN THEIR LIVINGS. IN TODAY'S GENERATION, FACE RECOGNITION IS AN IMPORTANT PART FOR THE PURPOSE OF SAFETY, SURVEILLANCE AND SECURITY. THEREFORE WE NEED FOR AN EFFICIENT AND COST EFFECTIVE SYSTEM. INSTEAD APARTMENT VISITOR'S MANAGEMENT SYSTEM WILL ASSIST YOU THE PROFESSIONLIZED WAY IN WHICH YOU WELCOME YOUR VISITORS.THIS SOFTWARE IS IMPROVE THE PRODUCTIVITY AND SECURE FROM THE UNAUTHORIZIED OR ÛNWANTED VISITORS.

INTRODUCTION

THE APARTMENT VISITORS MANAGEMENT SYSTEM FOR KEEPING THE RECORDS OF VISITOR.ALSO IT DISPLAYS ALL THE VISITORS ENTRY AND OUTGOING RECORDS.THE MAIN OBJECTIVE OF THE PROJECT IS EASILY SEARCH VISITOR THROUGH HIS/HER NAME OR PHONE NUMBER. YOU CAN GET THE HOURS HE/SHE SPENT A PERTICULAR DAY THROUGH THIS SYSTEM.

PRINCIPAL
Guru Nanak Dev Engg. College, Bidar

GURU NANAK DEV ENGINEERING COLLEGE, BIDAR-585403, KARNATAKA

DEPARTMENT OF COMPUTER SCIENCE AND ENGINEERING

CERTIFICATE

This is certified that the mini project work entitled "DISTANCE STUDIES ONLINE EDUCATION SYSTEM " is a bonafide work carried out by NAGESHWARI(3GN19CS055) in partial fulfillment of the requirements for the award of B.E in computer science and Engineering by the Visvesvaraya Technological University, Belgavi during academic year 2021-2022. It is cerified that the mini project has been approved as it satisfies the academic requirements in respect of the mini project work prescribed for the B.E.

Signature of Guide
Prof.ASHWINI MANKAL

Signature of HOD
Dr. DAYANAND J

Head of Computer Science & Engineering Department,
Guru Nanak Dev Engineering College
BIDAR-585 403 (Karnataka)

NAME OF EXAMINERS

21/1/2022

PRINCIPAL
Guru Nanak Dev Engg. College, Bidar

ABSTRACT

Online Long-Distance Studies is developed in web-based platform. This project is implemented by taking reference of many online education sites. This web portal is implemented is basic features that are required to provide online education. In present trend usage of internet users are increasing at the same time education through online had become a new trend for sharing knowledge from all around the world.

This application is useful for students from all over the world and communicate with different countries educational institutes and gain knowledge on the subject.

PRINCIPAL
Guru Nanak Dev Engg. College, Bidar

BIDAR-585401 (KARNATAKA)

VISVESVARAYA TECHNOLOGICAL UNIVERSITY

BELGAVI

GURU NANAK DEV ENGINEERING COLLEGE

BIDAR – 585401 (KARNATAKA)

DEPARTMENT OF

COMPUTER SCIENCE AND ENGINEERING

CERTIFICATE

This is to certify that the project entitled "ONLINE LIBRARY MANAGEMENT SYSTEM" is a bonafidework carried out by, SUSHMITA (3GN19CS103) , SUSHMITA (3GN19CS104), VAISHNAVI HUGAR (3GN19CS114)bonafide students of GNDEC College of Engineering in partial full fillment of requirement for the 5th semester of bachelor of engineering in Computer Science and Engineering from the Visvesvaraya Technological University, Belagavi during the year 2021-2022.It is certified that the correction/suggestion indicated for internal Assessment have been incorporated in the Report .The project report has been approved as it satisfies the academic requirements of project works prescribed for the fifthsemester.

Signature of Guide

Signature of HOD

Dr.DAYANAND J

Examiners

1. Ashwini M

2. Nagesh.C

28/3/22

28/3/22

PRINCIPAL

Guru Nanak Dev Engg. College, Bidar

ABSTRACT

Online Library Management System is a system which maintains the information about the books present in the library, their authors, the members of library to whom books are issued, library staff and all. This is very difficult to organize manually. Maintenance of all this information manually is a very complex task.

Owing to the advancement of technology, organization of an Online Library becomes much simple. The Online Library Management has been designed to computerize and automate the operations performed over the information about the members, book issues and returns and all other operations. This computerization of library helps in many instances of its maintenances. It reduces the workload of management as most of the manual work done is reduced

PRINCIPAL
Guru Nanak Dev Engg. College, Bidar

GURU NANAK DEV ENGINEERING COLLEGE

DEPARTMENT OF COMPUTER SCIENCE AND ENGINEERING

BIDAR-585403

Certificate

Certified that the Mini Project Work Project Work entitled "ELECTRICITY BILL MANAGEMENT SYSTEM" carried out by NAGESH (3GN19CS054) Bona fide students of "GURU NANAK DEV ENGINEERING COLLEGE" in partial fulfilment for the 5TH SEM of Bachelor of Engineering degree in CSE of Visvesvaraya Technological University, Belagavi during the academic year 2021-2022. It is certified that all corrections/suggestions indicated for Internal Assessment have been incorporated in the report deposited in the department library. The project report has been approved as it satisfies the academic requirements in respect of DBMS Laboratory with Mini Project(18CSL58) prescribed for the said Degree.

21/1/2022

Signature of guide
Prof. ASHWINI MANKAL

Signature of HOD
Dr. DAYANAND

EXTERNAL EXAMINATION

Name of the Examiners	Signature with date
1.	
2.	26/3/22

PRINCIPAL
Guru Nanak Dev Engg. College, Bidar

ABSTRACT

"Electric bill Management System" is designed to make the existing manual system automatic with the help of computerized equipment and full-edged computer software, fulfilling their requirements, so that their valuable data and information can be stored for a [illegible] and manipulation of the same. The required software is [illegible] This web application can maintain and view

PRINCIPAL
Guru Nanak Dev Engg. College, Bidar

DEPARTMENT OF COMPUTER SCIENCE AND ENGINEERINNG
GURU NANAK DEV ENGINEERING COLLEGE
BIDAR-585403, KARNATAKA

VISVESVARAYA TECHNOLOGICAUNIVERSITY, BELAGAVI

GURU NANAK DEV ENGINEERING COLLEGE

BIDAR-585403, KARNATAKA

DEPARTMENT OF COMPUTER SCIENCE AND ENGINEERING

CERTIFICATE

This is to certify that the mini project work entitled "TRAVELLERS CITY INFORMATION" is a bonafide work carried out by REVATHI PATIL (3GN19CS077), SHIVANI CHAPTE (3GN19CS092), HUMAIRA SHAIKH (3GN19CS088), AZHAR SHAIKH (3GN19CS017) in partial fulfillment of the requirements for the award B.E in computer science and engineering by Visvesvaraya technological university, Belagavi during academic year 2021-2022. It is certified that the mini project report has been approved as it satisfies the academic requirements in respect of the mini project work prescribed for B.E.

Signature of Guide

Signature of HOD

NAME OF EXAMINERS

SIGNATURE WITH DATE

1. Gurupadsad

1.

2. Mayuri K 26/5/22

2.

PRINCIPAL
Guru Nanak Dev Engg. College, Bidar

ABSTRACT

As the name specific "TRAVELLERS CITY INFORMATION" is a software developed for managing tour booking. Identification of the drawback of the existing system leads to the designing of the computerized system that will be compatible to the existing system with the system which is more user friendly and more GUI oriented.

We can improve the efficiency of the system, thus overcome the drawbacks of the existing system. Less human error. Strength and strain of manual labor can be reduced.

High Security, Data Redundancy can be avoided to some extent. Data consistency. Easy to handle. Easy data updating, Easy record keeping, Backup data can be easy generated.

PRINCIPAL
Guru Nanak Dev Engg. College, Bidar

VISVESVARAYA TECHNOLOGICAL UNIVERSITY,BELAGAVI

BIDAR-585403, KARNATAKA

GURU NANAK DEV ENGINEERING COLLEGE,

DEPARTMENT OF COMPUTER SCIENCE ANDENGINEERING

CERTIFICATE

This is to certify that the mini project work entitled **"CRIMINALS REGISTRATION SYSTEM FOR POLICE DEPARTMENT"** is a bonafide work carried out by **ARUN PATIL(3GN19CS015)** in the partial fulfillment of the requirements for the **Bachelor's degree** in Computer Science and Engineering of the **Vishvesvaraya Technological University, Belagavi** during the academic year 2021-2022.

21/1/2022

.....

Signature of Guide
Prof. Ashwini Mankal

.....

Signature of H.O.D
Prof. Dr Dayanand J

Head of Computer Science & Engineering Department,
Guru Nanak Dev Engineering College
BIDAR-585 403 (Karnataka)

EXTERNAL VIVA:

Examiners: 1) ..... 2) .....

PRINCIPAL
Guru Nanak Dev Engg. College, Bidar

ABSTRACT

The "Crime Management System" is a web based application for online complaining and computerized management of crime records. Here in this website a person who wishes to file a complaint or report an incident must register before log in and once the admin authenticates the user he or she can login into the website and file a complaint .This complaint will be received by police and police can send a message regarding status of the complaint to the user who filed the complaint. Police can use this software to manage different crimes and some of the works which is done in police station manually. Police gets their login password from admin directly. Some of the modules like unidentified dead bodies, missing persons, and most wanted criminals can be viewed through the website without logging in. So this website helps police to find out the problems in the society without them actually coming to the police station. Key Words: FIR-First Information Report

PRINCIPAL
Guru Nanak Dev Engg. College, Bidar

VISVESVARAYA TECHNOLOGICAL UNIVERSITY, BELAGAVI

GURU NANAK DEV ENGINEERING COLLEGE

BIDAR-585403, KARNATAKA

DEPARTMENT OF

COMPUTER SCIENCE AND ENGINEERING

CERTIFICATE

This is certified that the mini project work entitled **"AIRPLANE TAKEOFF"** is a bonafide work carried out by **BHAVANESHWARI (3GN19CS020), SANJANA (3GN19CS082)** in partial fulfillment of the requirements for the award of B.E in Computer Science and Engineering by the Visvesvaraya Technological University, Belagavi during Academic year 2021 -2022. It is certified that the mini project report has been approved as it satisfies the academic requirements in respect of the mini project work prescribed for the B.E.

Signature of Guide
Prof. MASARATH B

Signature of HOD
Dr. DAYANAND J

EXAMINARS NAME

1. 20/7/22
2. 20/7/22

SIGNATURE AND DATE

1.
2.

PRINCIPAL
Guru Nanak Dev Engg. College, Bidar

ABSTRACT

Rapid and unimaginable advancement in technology and considerable growth in developing countries economy in a last decade has propelled a huge development in a aviations sector. Commercial aviation sector is no more only a medium of transportation, but it too cares of various luxurious needs of a human. Likewise military aviations sector is not only about killing enemy, [illegible] coming back safely. In both the aforesaid cases, based on various factor is prerequisite and of paramount importance. In Aircraft Design Project-1(ADP-1), we have elaborately discussed design based on the weight and wing loading consideration for a CARGO AIRPLANE. In weight calculation, we analyzed engines takeoff, climb, range, endurance, landing etc . In wing loading calculation we analyzed Take Off Parameter (TOP). Take Off Distance (Sto), Wing loading, landing distance (SL) etc. In Aircraft Design Project -2 (ADP-2) is the continuation of a ADP-1 in which we will discuss other designing aspects like v-n diagram, load factor, stall velocity, critical loading, maneuvering loads etc.

PRINCIPAL
Guru Nanak Dev Engg. College, Bidar

VISVESVARAYA TECHNOLOGICAL UNIVERSITY, BELAGAVI

GURU NANAK DEV ENGINEERING COLLEGE, BIDAR

DEPT. OF COMPUTER SCIENCE AND ENGINEERING

CERTIFICATE

This is to certify that the mini project work entitled " **WIRELSS MOBILE COMMUNICATION**" is a bonafide work carried out by **NIKITA** (3GN19CS060) in partial fulfillment of the requirements for the **Bachelor's degree** in Computer Science and Engineering of the **Visvesvaraya Technological University, Belagavi** during the academic year 2021-2022.

Signature of Guide
Prof. MASRATH BEGUM

Signature of HOD
Dr. DAYANAND J

Examiner's Signatures:

1. 21/7/22
2. 21/7/22

PRINCIPAL
Guru Nanak Dev Engg. College, Bidar

ABSTRACT

The main aim of this project is to develop a suitable graphic package using OpenGL. The scope of this mini-project includes various built in functions of OpenGL and user defined functions. These functions are implemented in the design of this mini-project. This mini-project "WIRELESS MOBILE COMMUNICATION" is an interactive graphic created using OpenGL programming toolkit.

The project shows simple application of computer graphics in consecutive transformation like rotation, scaling and translation of objects using OpenGL platform. The function code uses inbuilt functions which are defined in the GLUT (OpenGL utility toolkit) library.

The computer based model calls keyboard functions to make the model move according to the functions specified, and works according to the keys pressed by the user. Here some of the keys are used to build communication links between the managed devices in the mobile communication device.

PRINCIPAL
Guru Nanak Dev Engg. College, Bidar

VISVESVARAYA TECHNOLOGICAL UNIVERSITY, BELAGAVI

GURU NANAK DEV ENGINEERING COLLEGE,

BIDAR-585403, KARNATAKA

DEPARTMENT OF COMPUTER SCIENCE AND ENGINEERING

CERTIFICATE

This is to certify that the mini project work entitled **"FUN WITH POLYGONS"** is a bonafide work carried out by **MD WAJID ALI (3GN19CS045) , CHETAN ALMAJE (3GN19CS024), MIRZA MAAZ BAIG (3G19CS0480), MOHD MAHROOF ALI (3GN19CS051)** in partial fulfillment of the requirements for the **Bachelor's degree in Computer Science and Engineering** of the **Visvesvaraya Technological University, Belagavi** during the academic year 2021-2022.

Signature of Guide
Prof. Masrath Begum

Signature of HOD
Prof. DAYANAND J

Examiner's Signatures:

1. 20/7/22

2. 20/7/22

PRINCIPAL
Guru Nanak Dev Engg. College, Bidar

ABSTRACT

Computer Graphics has grown into a very important topic in the branch of Computer Science. This is due to an effective and rapid communication formed between man and the machine. Human eye can absorb the information in a displayed diagram or perspective diagram much faster than it can scan a page or a table of contents.

This project " **FUN WITH POLYGONS** " demonstrates the creation of various polygons by giving the number of vertices as input. The user is also given the option to see the polygon from different views. OpenGL is used to make this possible by virtue of its various functionalities.

It can generate simple geometric figures like triangle, square, circle and various polygons by giving the number of sides from users input. Polygons like triangle, square, pentagon and so on can be generated with ease. We also include tilting and moving properties for the various polygons.

The code implemented makes use of various OpenGL functions for translation, rotation and keyboard callback function, built-in functions for solids and many more. The concepts of computer graphics stand a backbone to achieve the aforementioned idea. Primitive drawing, event driven interactions and basic animation have been the important concepts brought out by this application.

The report is chalked out into sections describing the basic requirements superseded by the briefing on functions used. Following this, the detailed description of how the implementation is done effectively using these functions and C language is presented. The source code is provided along with necessary comments to enhance readability of code. The screenshots have been provided for amelioration of our little effort. The conclusion and the future enhancements proposed conclude the report. The maximum efforts are been made to ensure that the view is aesthetically pleasing and eye-catchin

PRINCIPAL
Guru Nanak Dev Engg. College, Bidar

GURU NANAK DEV ENGINEERING COLLEGE

DEPARTMENT OF COMPUTER SCIENCE AND ENGINEERING

BIDAR-585403, KARNATAKA

Certificate

Certify that the Mini Project Work entitled **"WORKING OF A SATELLITE"** work carried out by **AISHWARYA , B SHIVANI** and **CHAITANYA** .Bonafide students of "GURU NANAK DEV ENGINEERING COLLEGE" in partial fulfilment for the 6th SEM of Bachelor of Engineering degree in CSE if Visvesvaraya Technological University, Belagavi during the academic year 2022-2023.It is certified that all corrections/suggestions indicated for Internal Assessment have been incorporated in the report deposited in the department library. The project report has been approved as it satisfies the academic requirements in respect of CG Laboratory with Mini project (18CSL67) prescribed for the said Degree.

Signature of Guide
Prof. MASRATH BEGUM

Signature of HOD
DR. DAYANAND J

EXTERNAL EXAMINATION

Name of the Examiners: Signature with date

1.

PRINCIPAL
Guru Nanak Dev Engg. College, Bidar

ABSTRACT

Computer Graphics has grown into a very important topic in the branch of Computer Science. This is due to an effective and rapid communication formed between man and the machine. Human eye can absorb the information in a displayed diagram or perspective diagram much faster than it can scan a page or a table of contents.

Main aim of this Mini Project is to illustrate the concepts of working of a Satellite in OpenGL.

A **Satellite** is an object which has been placed into orbit by human endeavour. Such objects are sometimes called **Artificial Satellites** to distinguish them from natural satellites such as the Moon.

Satellites are used for a large number of purposes. Common types include military and civilian Earth observation satellites, communications satellites, navigation satellites, weather satellites, and research satellites.

This pushed the entire network into a 'congestion collapse' where most packets were lost and the resultant throughput was negligible.

We have used input devices like mouse and key board to interact with program.

We have also used Solid Cube for forming a complete network setup which help to understand concept of Congestion Control very well.

To differentiate between objects we have used different colours for different objects.

We have added menu which makes the program more interactive.

In this project we have used a small Solid Cube to represent a data, which travels as data transfer from source to destination.

We have used font family for indicating the name of objects as we can see in this project.

PRINCIPAL
Guru Nanak Dev Engg. College, Bidar

GURU NANAK DEV ENGINEERING COLLEGE

DEPARTMENT OF COMPUTER SCIENCE AND ENGINEERING

BIDAR-585403, KARNATAKA

Certificate

Certify that the Mini Project Work entitled **"WORKING OF A SATELLITE"** work carried out by **AISHWARYA , B SHIVANI** and **CHAITANYA** .Bonafide students of "GURU NANAK DEV ENGINEERING COLLEGE" in partial fulfilment for the 6th SEM of Bachelor of Engineering degree in CSE if Visvesvaraya Technological University, Belagavi during the academic year 2022-2023.It is certified that all corrections/suggestions indicated for Internal Assessment have been incorporated in the report deposited in the department library. The project report has been approved as it satisfies the academic requirements in respect of CG Laboratory with Mini project (18CSL67) prescribed for the said Degree.

Signature of Guide
Prof. MASRATH BEGUM

Signature of HOD
DR. DAYANAND J

EXTERNAL EXAMINATION

Name of the Examiners:

Signature with date

1. 20/7/22

2. 20/2/22

PRINCIPAL
Guru Nanak Dev Engg. College, Bidar

ABSTRACT

Computer Graphics has grown into a very important topic in the branch of Computer Science. This is due to an effective and rapid communication formed between man and the machine. Human eye can absorb the information in a displayed diagram or perspective diagram much faster than it can scan a page or a table of contents.

Main aim of this Mini Project is to illustrate the concepts of working of a Satellite in OpenGL.

A **Satellite** is an object which has been placed into orbit by human endeavour. Such objects are sometimes called **Artificial Satellites** to distinguish them from natural satellites such as the Moon.

Satellites are used for a large number of purposes. Common types include military and civilian Earth observation satellites, communications satellites, navigation satellites, weather satellites, and research satellites.

This pushed the entire network into a 'congestion collapse' where most packets were lost and the resultant throughput was negligible.

We have used input devices like mouse and key board to interact with program.

We have also used Solid Cube for forming a complete network setup which help to understand concept of Congestion Control very well.

To differentiate between objects we have used different colours for different objects.

We have added menu which makes the program more interactive.

In this project we have used a small Solid Cube to represent a data, which travels as data transfer from source to destination.

We have used font family for indicating the name of objects as we can see in this project.

PRINCIPAL
Guru Nanak Dev Engg. College, Bidar

VISVESVARAYA TECHNOLOGICAL UNIVERSITY, BELAGAVI

GURU NANAK DEV ENGINEERING COLLEGE

BIDAR-585403, KARNATAKA

DEPARTMENT OF COMPUTER SCIENCE AND ENGINEERING

CERTIFICATE

This is to certify that the mini project work entitled "2D HELICOPTER" is a Bonafide work carried out by **NIMRA (3GN19CS061), ALI QUADRI (3GN19CS085), VIQUAR (3GN19CS087) & POOJA (3GN19CS066)** in partial fulfillment of the requirements for the Bachelor's degree in COMPUTER SCIENCE AND ENGINEERING of VISVESVARAYA TECHNOLOGICAL UNIVERSITY, BELAGAVI during the year 2021-2022. It is certified that this Mini Project Report has been approved as it satisfies the academic requirements.

13/7/22

SIGNATURE OF GUIDE

SIGNATURE OF HOD

Head of Computer Science & Engineering Department, Guru Nanak Dev Engineering College BIDAR-585 403 (Karnataka)

NAME OF EXAMINAR

SIGN WITH DATE

1. _____

2. _____

PRINCIPAL
Guru Nanak Dev Engg. College, Bidar

ABSTRACT

A 2d graphics based game helicopter is a great start for a student who starts learning computer graphics & visualization. The development of the game has large scope to learn computer graphics from scratch. We used OpenGL utility toolkit to implement the algorithm, written it in c++ language.

There is still scope left in the development of project like, after"game over" a list should show top ten scorers, a need to embed a button "play again". Welcome screen need more modification there is scope of embedding buttons like "about", "how to play", "configuration", "profiles", etc. In future we hope we would implement it in source code for better experience of playing this game.

Finally, we could say by developing the game we have learnt the basics of f computer graphics and in future by developing it further we shall learn more. It will be our pleasure if we could develop in 3d graphics package.

PRINCIPAL
Guru Nanak Dev Engg. College, Bidar

VISVESVARAYA TECHNOLOGICAL UNIVERSITY, BELAGAVI

GURU NANAK DEV ENGINEERING COLLEGE

BIDAR-585403, KARNATAKA

DEPARTMENT OF COMPUTER SCIENCE AND ENGINEERING

CERTIFICATE

This is to certify that the mini project work entitled "2D HELICOPTER" is a Bonafide work carried out by **NIMRA (3GN19CS061), ALI QUADRI (3GN19CS085), VIQUAR (3GN19CS087) & POOJA (3GN19CS066)** in partial fulfillment of the requirements for the Bachelor's degree in COMPUTER SCIENCE AND ENGINEERING of VISVESVARAYA TECHNOLOGICAL UNIVERSITY, BELAGAVI during the year 2021-2022. It is certified that this Mini Project Report has been approved as it satisfies the academic requirements.

18/7/22

SIGNATURE OF GUIDE

SIGNATURE OF HOD

Head of Computer Science & Engineering Department, Guru Nanak Dev Engineering College BIDAR-585 403 (Karnataka)

NAME OF EXAMINAR **SIGN WITH DATE**

1. _____ 21/7/22

2. _____ 21/7/22

PRINCIPAL

Guru Nanak Dev Engg. College, Bidar

ABSTRACT

A 2d graphics based game helicopter is a great start for a student who starts learning computer graphics & visualization. The development of the game has large scope to learn computer graphics from scratch. We used OpenGL utility toolkit to implement the algorithm, written it in c++ language.

There is still scope left in the development of project like, after"game over" a list should show top ten scorers, a need to embed a button "play again". Welcome screen need more modification there is scope of embedding buttons like "about", "how to play", "configuration", "profiles", etc. In future we hope we would implement it in source code for better experience of playing this game.

Finally, we could say by developing the game we have learnt the basics of f computer graphics and in future by developing it further we shall learn more. It will be our pleasure if we could develop in 3d graphics package.

PRINCIPAL
Guru Nanak Dev Engg. College, Bidar

VISVESVARAYA TECHNOLOGICAL UNIVERSITY, BELAGAVI

GURU NANAK DEV ENGINEERING COLLEGE, BIDAR

DEPT. OF COMPUTER SCIENCE AND ENGINEERING

CERTIFICATE

This is to certify that the mini project work entitled " SIMULATION OF BIKE" is a bonafide work carried out by SINDOLU AKASH (3GN19CS099) in partial fulfillment of the requirements for the Bachelor's degree in Computer Science and Engineering of the Visvesvaraya Technological University, Belagavi during the academic year 2021-2022.

18/7/22

Signature of Guide
Prof. ASHWINI M

Signature of HOD
Prof. DAYANAND J

Head of Computer Science & Engineering Department,
Guru Nanak Dev Engineering College
BIDAR-585 403 (Karnataka)

Examiner's Signatures:

1. 22/7/22

2. 22/7/22

PRINCIPAL
Guru Nanak Dev Engg. College, Bidar

Scanned with CamScanner

ABSTRACT

Computer Graphics has grown into a very important topic in the branch of Computer Science. This is due to an effective and rapid communication formed between man and the machine. Human eye can absorb the information in a displayed diagram or perspective diagram much faster than it can scan a page or a table of contents.

This project " SIMULATION OF BIKE " demonstrates the creation of various polygons by giving the number of vertices as input. The user is also given the option to see the polygon from different views. OpenGL is used to make this possible by virtue of its various functionalities.

It can generate simple geometric figures like triangle, square, circle and various polygons by giving the number of sides from users input. Polygons like triangle, square, pentagon and so on can be generated with ease. We also include tilting and moving properties for the various polygons.

The code implemented makes use of various OpenGL functions for translation, rotation and keyboard callback function, built-in functions for solids and many more. The concepts of computer graphics stand a backbone to achieve the aforementioned idea. Primitive drawing, event driven interactions and basic animation have been the important concepts brought out by this application.

The report is chalked out into sections describing the basic requirements superseded by the briefing on functions used. Following this, the detailed description of how the implementation is done effectively using these functions and C language is presented. The source code is provided along with necessary comments to enhance readability of code. The screenshots have been provided for amelioration of our little effort. The conclusion and the future enhancements proposed conclude the report. The maximum efforts are been made to ensure that the view is aesthetically pleasing and eye-catchin

PRINCIPAL
Guru Nanak Dev Engg. College, Bidar

VISVESVARAYA TECHNOLOGICAL UNIVERSITY, BELAGAVI

GURU NANAK DEV ENGINEERING COLLEGE, BIDAR

DEPT. OF COMPUTER SCIENCE AND ENGINEERING

CERTIFICATE

This is to certify that the mini project work entitled " RUBIK'S CUBE Game" is a bonafide work carried out by **MD SHOIEB ALI (3GN19CS044)** in partial fulfillment of the requirements for the **Bachelor's degree** in **Computer Science and Engineering** of the **Visvesvaraya Technological University, Belagavi** during the academic year 2021-2022.

Signature of Guide
Prof. MASARATH BEGUM

Signature of HOD
Prof. DAYANAND J

Examiner's Signatures:

1. 20/7/22
2. 20/7/22

PRINCIPAL
Guru Nanak Dev Engg. College, Bidar

ABSTRACT

In this mini project we are going to see, a complex opengl project to show and solve the puzzle of Rubik's Cube in OpenGL C++.

The cubies are divided into three different types:

Centre Cubies:
The center cubies refer to the cubie pieces that are located at the center of each face of the Rubik's cube. There is a total of six cubies, and each has one face let, they always stick in the same location corresponding to each other.

Corner Cubies:
The corner cubies refer to the cubic pieces that are located at the corner of the Rubik's cube. There is a total of eight corners, and each has three face lets.

Edge Cubies:
The edge cubies refer to the edge pieces that are located between each pair of the corresponding corners. There are 12 different edges in the Rubik's cube, and each has two Face lets.

All cubes do not have the same color arrangements. The colors utilized for these illustrations is known as BOY (Blue, Orange, and Yellow, are faced in the clockwise direction). Here, you need to analyze the locations of the centers corresponding to each other, as this is always your color arrangements.

White is located opposite to yellow.

Blue is located opposite to green.

Orange is located opposite red.

Orange is also located to the right of blue only if white is facing up

PRINCIPAL
Guru Nanak Dev Engg. College, Bidar

GURU NANAK DEV ENGINEERING COLLEGE

DEPARTMENT OF COMPUTER SCIENCE AND

ENGINEERINGBIDAR-585403

Certificate

Certified that the Mini Project Work Project Work entitled "3D BIKE SIMULATION" carried out by ANJALI JAINAPURE (3GN19CS013) Bonafide students of "GURU NANAK DEV ENGINEERING COLLEGE" in partial fulfillment for the 6th Sem of Bachelor of Engineering degree in CSE of VISVESVARAYA TECHNOLOGY UNIVERSITY, BELAGAVI during the academic year 2021-2022. It is certified that all corrections/suggestions indicated for Internal Assessment have been incorporated in the report deposited in the department library. The project report has been approved as it satisfies the academic requirements in respect of CG Laboratory with mini Project(18CSL67) prescribed for the said Degree.

MB 21/7/22

Signature of guide
Prof. MASRATH BEGUM

Signature of HOD
Dr. DAYANAND J

EXTERNAL EXAMINATION

Name of the Examiners

Signature with date

1. 23/7/22
2. MB 23/7/22

Head of Computer Science & Engineering Department, Guru Nanak Dev Engineering College, BIDAR-585403

PRINCIPAL
Guru Nanak Dev Engg. College, Bidar

ABSTRACT

Computer Graphics has grown into a very important topic in the branch of Computer Science. This is due to an effective and rapid communication formed between man and the machine. Human eye can absorb the information in a displayed diagram or perspective diagram much faster than it can scan a page or a table of contents.

This M in i Project is on 3D BIKE SIMULATION Computer Graphics using OpenGL Functions. It is a User interactive program where in the User can view the required display by making use of the input devices like Keyboard and Mouse. This project mainly consists of a bike and a robot. The Robot is made to sit on the bike, so that it looks like a man riding it.The bike can be viewed in any direction and in any angle. The bike is accelerated and its movements are controlled using the keyboard. For viewing, we make use of the mouse. The bike is ridden on a polygonal surface, which looks like a giant rectangular mesh. Lightinghas been incorporated on only one side-Viewer side.

The main aim of the 3D bike Simulation Computer Graphics Mini Project is to illustrate the concepts and usage of pre-built functions in OpenGL. Simulation of a 3d Car Simulation is being done using computer graphics. 3D Car Simulation is a project where we can also change the weather & color of the car and other graphics.

PRINCIPAL
Guru Nanak Dev Engg. College, Bidar

VISVESVARAYA TECHNOLOGICAL UNIVERSITY, BELAGAVI

GURU NANAK DEV ENGINEERING COLLEGE,
BIDAR-585403, KARNATAKA

DEPARTMENT OF COMPUTER SCIENCE AND ENGINEERING

CERTIFICATE

This is to certify that the mini project work entitled **"CATCH ME IF YOU CAN"** is a bonafide work carried out by **ANKUSH KANJIKAR (3GN19CS014)** in the partial fulfilment of the requirements for the **Bachelor' s degree** in Computer Science and Engineering of the **Visvesvaraya Technological University, Belagavi** during the academic year 2021-2022.

.....	.....
Signature of Guide	**Signature of H.O.D**
Prof. Masrath	**Prof. Dr Dayanand J**

EXTERNAL VIVA:

Examiners: 1) ..... **2)** .....

PRINCIPAL
Guru Nanak Dev Engg. College, Bidar

ABSTRACT

"Catch Me if you can" game involves a block that keeps changing its position relatively and the user is supposed to catch it. Graphics provides one of the most natural means of communicating with a computer ,since our highly developed 2D Or 3D pattern-recognition abilities allow us to perceive and process pictorial data rapidly. OpenGL fosters innovation and speeds application development by incorporating a broad set of rendering, texture mapping, special effects, and other powerful visualisation functions. Developers can leverage the power of OpenGL across all popular desktop and workstation platforms, ensuring wide application deployment. The project is created to demonstrate OpenGL's concepts. It encompasses some of the skills learnt in our OpenGL classes.

PRINCIPAL
Guru Nanak Dev Engg. College, Bidar

VISVESVARAYA TECHNOLOGICAL UNIVERSITY , BELAGAVI

GURU NANAK DEV ENGINEERING COLLEGE ,
BIDAR-585403, KARNATAKA

DEPARTMENT OF COMPUTER SCIENCE AND ENGINEERING

CERTIFICATE

This is to certify that the mini project work entitled **"CATCH ME IF YOU CAN"** is a bonafide work carried out by **ARUN PATIL(3GN19CS015)** in the partial fulfilment of the requirements for the **Bachelor' s degree** in Computer Science and Engineering of the **Visvesvaraya Technological University, Belagavi** during the academic year 2021-2022.

.....	.....
Signature of Guide	**Signature of H.O.D**
Prof. Masrath	**Prof. Dr Dayanand J**

EXTERNAL VIVA:

Examiners: 1) ..... **2)** .....

PRINCIPAL
Guru Nanak Dev Engg. College, Bidar

ABSTRACT

"Catch Me if you can" game involves a block that keeps changing its position relatively and the user is supposed to catch it. Graphics provides one of the most natural means of communicating with a computer ,since our highly developed 2D Or 3D pattern-recognition abilities allow us to perceive and process pictorial data rapidly. OpenGL fosters innovation and speeds application development by incorporating a broad set of rendering, texture mapping, special effects, and other powerful visualisation functions. Developers can leverage the power of OpenGL across all popular desktop and workstation platforms, ensuring wide application deployment. The project is created to demonstrate OpenGL's concepts. It encompasses some of the skills learnt in our OpenGL classes.

PRINCIPAL

VISVESVARAYA TECHNOLOGICAL UNIVERSITY, BELAGAVI

GURU NANAK DEV ENGINEERING COLLEGE,

BIDAR-585403, KARNATAKA

DEPARTMENT OF COMPUTER SCIENCE AND ENGINEERING

CERTIFICATE

This is to certify that the mini project work entitled **"FUN WITH POLYGONS"** is a bonafide work carried out by **MD WAJID ALI (3GN19CS045) , CHETAN ALMAJE (3GN19CS024), MIRZA MAAZ BAIG (3G19CS0480), MOHD MAHROOF ALI (3GN19CS051)** in partial fulfillment of the requirements for the **Bachelor's degree in Computer Science and Engineering** of the **Visvesvaraya Technological University, Belagavi** during the academic year 2021-2022.

Signature of Guide
Prof. Masrath Begum

Signature of HOD
Prof. Dayanand J

Examiner's Signatures:

1. 20/7/22
2. 22/7/22

PRINCIPAL
Guru Nanak Dev Engg. College, Bidar

ABSTRACT

Computer Graphics has grown into a very important topic in the branch of Computer Science. This is due to an effective and rapid communication formed between man and the machine. Human eye can absorb the information in a displayed diagram or perspective diagram much faster than it can scan a page or a table of contents.

This project " **FUN WITH POLYGONS** " demonstrates the creation of various polygons by giving the number of vertices as input. The user is also given the option to see the polygon from different views. OpenGL is used to make this possible by virtue of its various functionalities.

It can generate simple geometric figures like triangle, square, circle and various polygons by giving the number of sides from users input. Polygons like triangle, square, pentagon and so on can be generated with ease. We also include tilting and moving properties for the various polygons.

The code implemented makes use of various OpenGL functions for translation, rotation and keyboard callback function, built-in functions for solids and many more. The concepts of computer graphics stand a backbone to achieve the aforementioned idea. Primitive drawing, event driven interactions and basic animation have been the important concepts brought out by this application.

The report is chalked out into sections describing the basic requirements superseded by the briefing on functions used. Following this, the detailed description of how the implementation is done effectively using these functions and C language is presented. The source code is provided along with necessary comments to enhance readability of code. The screenshots have been provided for amelioration of our little effort. The conclusion and the future enhancements proposed conclude the report. The maximum efforts are been made to ensure that the view is aesthetically pleasing and eye-catchin

PRINCIPAL
Guru Nanak Dev Engg. College, Bidar

VISVESVARAYA TECHNOLOGICAL UNIVERSITY, BELAGAVI

GURU NANAK DEV ENGINEERING COLLEGE, BIDAR-585403, KARNATAKA

DEPARTMENT OF COMPUTER SCIENCE AND ENGINEERING

CERTIFICATE

This is to certify that the mini project work entitled **"3D CAR SIMULATION "** is a bonafide work carried out by **VARSHITA VANGAPALLI** in partial fulfillment of the requirements for the **Bachelor's degree in Computer Science and Engineering** of the **Visvesvaraya Technological University, Belagavi** during the academic year 2021-2022.

13/7/22

Signature of Guide
Prof. Ashwini Mankal

Signature of HOD
Dr. DAYANAND J
Head of Computer Science & Engineering Department,
Guru Nanak Dev Engineering College
BIDAR-585 403 (Karnataka)

Examiner's Signatures:

1. 22/7/22
2. 22/7/22

PRINCIPAL
Guru Nanak Dev Engg. College, Bidar

ABSTRACT

3D computer graphics or three-dimensional computer graphics (in contrast with 2D computer graphics) are graphics that use a three dimensional representation of geometric data that is stored in the computer for the purposes of performing calculations and rendering 2D images. Such images may be stored for viewing later or displayed in real time.

3D computer graphics rely on many of the same algorithms as 2D computer vector graphics in the wire frame model and 2D computer raster graphics in the final rendered display. In computer graphics software, 2D applications may use 3D techniques to achieve effects such as lighting, and 3D may use 2D rendering techniques.

3D computer graphics are often referred to as 3D models. Apart from the rendered graphic, the model is contained within the graphical data file. However, there are differences: a 3D model is mathematical representation of any three-dimensional object. A model is not technically a graphic until it is displayed. A model can be displayed visually as a two-dimensional image through a process called 3D rendering or used in non-graphical computer simulations and calculations. With 3D printing, 3D models are similarly rendered into a 3D physical representation of the model, with limitations to how accurate the rendering can match the virtual model.

PRINCIPAL
Guru Nanak Dev Engg. College, Bidar

VISVESVARAYA TECHNOLOGICAL UNIVERSITY , BELAGAVI

GURU NANAK DEV ENGINEERING COLLEGE ,
BIDAR-585403, KARNATAKA

DEPARTMENT OF COMPUTER SCIENCE AND ENGINEERING

CERTIFICATE

This is to certify that the mini project work entitled **"CATCH ME IF YOU CAN"** is a bonafide work carried out by **AMISH BEMELKHEDKAR(3GN19CS010)** in the partial fulfilment of the requirements for the **Bachelor' s degree** in Computer Science and Engineering of the Visvesvaraya Technological University, Belagavi during the academic year 2021-2022

.....	.....
Signature of Guide	Signature of H.O.D
Prof. Masrath	Prof. Dr Dayanand J

EXTERNAL VIVA:

Examiners: 1) ..... 2) .....

PRINCIPAL
Guru Nanak Dev Engg. College, Bidar

ABSTRACT

"Catch Me if you can" game involves a block that keeps changing its position relatively and the user is supposed to catch it. Graphics provides one of the most natural means of communicating with a computer ,since our highly developed 2D Or 3D pattern-recognition abilities allow us to perceive and process pictorial data rapidly. OpenGL fosters innovation and speeds application development by incorporating a broad set of rendering, texture mapping, special effects, and other powerful visualisation functions. Developers can leverage the power of OpenGL across all popular desktop and workstation platforms, ensuring wide application deployment. The project is created to demonstrate OpenGL's concepts. It encompasses some of the skills learnt in our OpenGL classes.

PRINCIPAL
Guru Nanak Dev Engg. College, Bidar

VISVESVARAYA TECHNOLOGICAL UNIVERSITY,BELAGAVI

GURU NANAK DEV ENGINEERING COLLEGE

DEPARTMENT OF COMPUTER SCIENCE AND ENGINEERING

CERTIFICATE

This is to certify that the mini project work entitled **"Solar System"** is a bonafide work carried out by **VILAS BIRADAR (3GN19CS119), VINAY(3GN19CS120), VINAYKUMAR.S.JABNOR (3GN19CS121)**, in the partial fulfillment of the requirements for the **Bachelor's degree** in Computer Science and Engineering of the Visvesvaraya Technological University, Belagavi during the academic year 2021-2022

12/7/22

.....

Signature of Guide
Prof. ASHWINI.M

.....

Signature of H.O.D
DR. DAYANAND . J
Head of Computer Science & Engineering Department,
Guru Nanak Dev Engineering College
B I D A R-585 403 (Karnataka)

EXTERNAL VIVA:_____ 22/7/22

Examiners: 1) ..... 2) 22/7/22

PRINCIPAL
Guru Nanak Dev Engg. College, Bidar

ABSTRACT

The Solar System consists of the Sun and the astronomical objects bound to it by gravity, all of which formed from the collapse of a giant molecular cloud approximately 4.6 billion years ago. Of the many objects that orbit the Sun, most of the mass is contained within eight relatively solitary planets[c] whose orbits are almost circular and lie within a nearly flat disc called the ecliptic plane. The four smaller inner planets, Mercury, Venus, Earth and Mars, also called the terrestrial planets, are primarily composed of rock and metal. The four outer planets, the gas giants, are substantially more massive than the terrestrials. The two largest, Jupiter and Saturn, are composed mainly of hydrogen and helium; the two outermost planets, Uranus and Neptune, are composed largely of ices, such as water, ammonia and methane, and are often referred to separately as "ice giants".

PRINCIPAL
Guru Nanak Dev Engg. College, Bidar

VISVESVARAYA TECHNOLOGICAL UNIVERSITY,BELAGAVI

GURU NANAK DEV ENGINEERING COLLEGE

DEPARTMENT OF COMPUTER SCIENCE AND ENGINEERING

CERTIFICATE

This is to certify that the mini project work entitled **"Solar System"** is a bonafide work carried out by **VILAS BIRADAR (3GN19CS119)** in the partial fulfillment of the requirements for the **Bachelor's degree** in Computer Science and Engineering of the **Visvesvaraya Technological University, Belagavi** during the academic year 2021-2022

12/7/22

.....

Signature of Guide
Prof. ASHWINI.M

.....

Signature of H.O.D
DR. DAYANAND . J

Head of Computer Science & Engineering Department,
Guru Nanak Dev Engineering College
BIDAR-585 403 (Karnataka)

EXTERNAL VIVA: MR 22/7/22

Examiners: 1) ..... 2) .....

22/7/22

PRINCIPAL
Guru Nanak Dev Engg. College, Bidar

ABSTRACT

The Solar System consists of the Sun and the astronomical objects bound to it by gravity, all of which formed from the collapse of a giant molecular cloud approximately 4.6 billion years ago. Of the many objects that orbit the Sun, most of the mass is contained within eight relatively solitary planets[e] whose orbits are almost circular and lie within a nearly flat disc called the ecliptic plane. The four smaller inner planets, Mercury, Venus, Earth and Mars, also called the terrestrial planets, are primarily composed of rock and metal. The four outer planets, the gas giants, are substantially more massive than the terrestrials. The two largest, Jupiter and Saturn, are composed mainly of hydrogen and helium; the two outermost planets, Uranus and Neptune, are composed largely of ices, such as water, ammonia and methane, and are often referred to separately as "ice giants".

PRINCIPAL
Guru Nanak Dev Engg. College, Bidar

VISVESVARAYA TECHNOLOGICAL UNIVERSITY,BELAGAVI

GURU NANAK DEV ENGINEERING COLLEGE

DEPARTMENT OF COMPUTER SCIENCE AND ENGINEERING

CERTIFICATE

This is to certify that the mini project work entitled **"Solar System"** is a bonafide work carried out by **VINAYKUMAR.S.JABNOR (3GN19CS121)** in the partial fulfillment of the requirements for the **Bachelor's degree** in Computer Science and Engineering of the **Visvesvaraya Technological University, Belagavi** during the academic year 2021-2022

12/7/22

.....

Signature of Guide
Prof. ASHWINI.M

.....

Signature of H.O.D,
DR. DAYANAND . J

EXTERNAL VIVA: 22/7/22

Examiners: 1) ..... 2) .....

Head of Computer Science & Engineering Department,
Guru Nanak Dev Engineering College
B I D A R-585 403 (Karnataka)

PRINCIPAL
Guru Nanak Dev Engg. College, Bidar

ABSTRACT

The Solar System consists of the Sun and the astronomical objects bound to it by gravity, all of which formed from the collapse of a giant molecular cloud approximately 4.6 billion years ago. Of the many objects that orbit the Sun, most of the mass is contained within eight relatively solitary planets[e] whose orbits are almost circular and lie within a nearly flat disc called the ecliptic plane. The four smaller inner planets, Mercury, Venus, Earth and Mars, also called the terrestrial planets, are primarily composed of rock and metal. The four outer planets, the gas giants, are substantially more massive than the terrestrials. The two largest, Jupiter and Saturn, are composed mainly of hydrogen and helium; the two outermost planets, Uranus and Neptune, are composed largely of ices, such as water, ammonia and methane, and are often referred to separately as "ice giants".

PRINCIPAL
Guru Nanak Dev Engg. College, Bidar

VISVESVARAYA TECHNOLOGICAL UNIVERSITY, BELAGAVI

GURU NANAK DEV ENGINEERING COLLEGE, BIDAR-585 403

DEPT. OF COMPUTER SCIENCE AND ENGINEERING

CERTIFICATE

This is to certify that mini project work entitled "**GRAPHICAL SIMULATION OF A SHIP** " is a bonafide work carried out by **ZEENATH FATIMA (3GN19CS122)** in partial fulfillment requirements for the award of B.E in Computer Science and Engineering of the **Visvesvaraya Technological University, Belagavi** during the academic year 2021-2022

18/7/22

Signature of Guide

Prof. ASHWINI PAMPATWAR

Signature of H.O.D

Prof. DAYANAND

Head of Computer Science & Engineering Department, Guru Nanak Dev Engineering College, BIDAR-585 403 (Karnataka)

External viva:..... 22/7/22

Examiners: 1)..... 2)..... 22/7/22

PRINCIPAL

Guru Nanak Dev Engg. College, Bidar

ABSTRACT

This project demonstrates a simple simulation of a ship in different environments. Here the different times of day are represented with different colors for background and lighting. We have also provided a movement operation for the ship with an ability to shoot projectiles from any given position. Here we use the keyboard as an input device. Keyboard events are generated when the mouse is in the window and one of the keys is pressed or released. The GLUT function glutKeyboardFunc is the callback for events generated by pressing the key. When it occurs the ASCII code for the key that generated the event and the location of the mouse are returned. All the keyboard callbacks are registered in a single callback function, such as the following: glutKeyboardFunc(keyboard); The callback is specified in GLUT by the following function call: glutDisplayFunc(display); It is invoked when GLUT determines that the window should be redisplayed.

PRINCIPAL
Guru Nanak Dev Engg. College, Bidar

GURU NANAK DEV ENGINEERING COLLEGE

DEPARTMENT OF COMPUTER SCIENCE AND ENGINEERING

BIDAR-585403, KARNATAKA

Certificate

Certify that the Mini Project Work entitled **"WORKING OF A SATELLITE "** work carried out by **B SHIVANI (3GN19CS018)**.Bonafide students of "GURU NANAK DEV ENGINEERING COLLEGE" in partial fulfilment for the 6th SEM of Bachelorof Engineering degree in CSE if Visvesvaraya Technological University, Belagavi during the academic year 2022-2023.It is certified that all corrections/suggestions indicated for Internal Assessment have been incorporated in the report deposited in the department library. The project report has been approved as it satisfies the academic requirements in respect of CG Laboratory with Mini project (18CSL67) prescribed for the said Degree.

MM 21/7/22

Signature of Guide

Prof. MASRATH BEGUM

Signature of HOD

DR. DAYANAND J

Head of Computer Science & Engineering Department, Guru Nanak Dev Engineering College, BIDAR-585 403 (Karnataka)

EXTERNAL EXAMINATION

Name of the Examiners: Signature with date

1. 23/7/22
2. MM 23/7/22

PRINCIPAL

Guru Nanak Dev Engg. College, Bidar

ABSTRACT

Computer Graphics has grown into a very important topic in the branch of Computer Science. This is due to an effective and rapid communication formed between man and the machine. Human eye can absorb the information in a displayed diagram or perspective diagram much faster than it can scan a page or a table of contents.

Main aim of this Mini Project is to illustrate the concepts of working of a Satellite in OpenGL.

A **Satellite** is an object which has been placed into orbit by human endeavour. Such objects are sometimes called **Artificial Satellites** to distinguish them from natural satellites such as the Moon.

Satellites are used for a large number of purposes. Common types include military and civilian Earth observation satellites, communications satellites, navigation satellites, weather satellites, and research satellites.

This pushed the entire network into a 'congestion collapse' where most packets were lost and the resultant throughput was negligible.

We have used input devices like mouse and key board to interact with program.

We have also used Solid Cube for forming a complete network setup which help to understand concept of Congestion Control very well.

To differentiate between objects we have used different colours for different objects.

We have added menu which makes the program more interactive.

In this project we have used a small Solid Cube to represent a data, which travels as data transfer from source to destination.

We have used font family for indicating the name of objects as we can see in this project.

PRINCIPAL
Guru Nanak Dev Engg. College, Bidar

GURU NANAK DEV ENGINEERING COLLEGE

DEPARTMENT OF COMPUTER SCIENCE AND ENGINEERING

BIDAR-585403

Certificate

Certified that the Mini Project Work Project Work entitled "WINDMILL" carried out by ASFA SHARIYA(3GN19CS016), MD MAQSOOD ALI(3GN19CS040), MOHD AKIFUDDIN(3GN19CS049), MOHD ARBAZ(3GN19CS050) Bonafide students of "GURU NANAK DEV ENGINEERING COLLEGE" in partial fulfilment for the 6TH SEM of Bachelor of Engineering degree in CSE of Visvesvaraya Technological University, Belagavi during the academic year 2022-2023. It is certified that all corrections/suggestions indicated for Internal Assessment have been incorporated in the report deposited in the department library. The project report has been approved as it satisfies the academic requirements in respect of CG Laboratory with Mini Project(18CSL67) prescribed for the said Degree.

Signature of guide
Prof. MASRATH BEGUM

Signature of HOD
Dr. DAYANAND J

EXTERNAL EXAMINATION

Name of the Examiners | Signature with date

1.
2. 20/7/22

20/7/22

PRINCIPAL
Guru Nanak Dev Engg. College, Bidar

ABSTRACT

In this project we designed the simulation of windmill using OpenGL. We used transformation functions like translate and rotate functions to design blades of the windmill. We used many OpenGL inbuilt function to design the structure of windmill.
This project consist of many user defined function such as increasing windmill fan speed, decreasing windmill fan speed, side views, front and back views, custom angle of rotation of entire windmill structure.

It provides several options which can be interacted through menus. The user can also interact with program through mouse, keyboard functions. The options provided by the menu are views like side view, back view, front view, custom view. Using mouse, if we click left side it rotates to left and on successive clicking speed increases, if we click right button speed decreases and on successive clicking, it turns rotating towards right and vice versa.
We can rotate the entire windmill with respect to its axis using the arrow keys of keyboard. It can be rotate through 3600

Simulation of Windmill is a designed and implemented using a graphics software system called OpenGL which has became a widely accepted standard for developing graphic application. Using openGL functions user can create geometrical objects and can use translation, rotation, scaling with respect to the co-ordinate system.

The project Visual Transformation Techniques using openGL is based on Rotation and Translation processes using shading effects and is demonstrated using Visual C++.

The development of the Simulation of Windmill project has given us a good exposure to OpenGL by which we have learnt some of the technique which help in development of animated pictures, gaming. Hence it is helpful for us even to take up this field as our career too and develop some other features in OpenGL and provide as a token of contribution to the graphics world.

Simulation of Windmill consist of many user defined function such as increasing windmill fan speed, decreasing windmill fan speed, side views, front and back views, custom angle of rotation of entire windmill structure. All these function makes this project an example of animation in OpenGL.

PRINCIPAL
Guru Nanak Dev Engg. College, Bidar

VISVESVARAYA TECHNOLOGICAL UNIVERSITY, BELAGAVI

GURU NANAK DEV ENGINEERING COLLEGE, BIDAR-585 403

DEPT. OF COMPUTER SCIENCE AND ENGINEERING

CERTIFICATE

This is to certify that mini project work entitled "**GRAPHICAL SIMULATION OF A SHIP** " is a bonafide work carried out by **TANZEEL MARYAM (3GN19CS109)** in partial fulfillment requirements for the award of B.E in Computer Science and Engineering of the Visvesvaraya Technological University, Belagavi during the academic year 2021-2022

Signature of Guide

Prof. ASHWINI PAMPATWAR

Signature of H.O.D

Prof. DAYANAND J

External viva:.....

Examiners: 1)..... **2).....**

PRINCIPAL
Guru Nanak Dev Engg. College, Bidar

ABSTRACT

This project demonstrates a simple simulation of a ship in different environments. Here the different times of day are represented with different colors for background and lighting. We have also provided a movement operation for the ship with an ability to shoot projectiles from any given position. Here we use the keyboard as an input device. Keyboard events are generated when the mouse is in the window and one of the keys is pressed or released. The GLUT function glutKeyboardFunc is the callback for events generated by pressing the key. When it occurs the ASCII code for the key that generated the event and the location of the mouse are returned. All the keyboard callbacks are registered in a single callback function. such as the following: glutKeyboardFunc(keyboard); The callback is specified in GLUT by the following function call: glutDisplayFunc(display); It is invoked when GLUT determines that the window should be redisplayed.

PRINCIPAL
Guru Nanak Dev Engg. College, Bidar

GURU NANAK DEV ENGINEERING COLLEGE

DEPARTMENT OF COMPUTER SCIENCE AND ENGINEERING

BIDAR-585403

Certificate

Certified that the Mini Project Work Project Work entitled "WINDMILL" carried out by ASFA SHARIYA(3GN19CS016), MD MAQSOOD ALI(3GN19CS040), MOHD AKIFUDDIN(3GN19CS049), MOHD ARBAZ(3GN19CS050) Bonafide students of "GURU NANAK DEV ENGINEERING COLLEGE" in partial fulfilment for the 6TH SEM of Bachelor of Engineering degree in CSE of Visvesvaraya Technological University, Belagavi during the academic year 2022-2023. It is certified that all corrections/suggestions indicated for Internal Assessment have been incorporated in the report deposited in the department library. The project report has been approved as it satisfies the academic requirements in respect of CG Laboratory with Mini Project(18CSL67) prescribed for the said Degree.

Signature of guide
Prof. MASRATH BEGUM

Signature of HOD
Dr. DAYANAND J

EXTERNAL EXAMINATION

Name of the Examiners	Signature with date
1.	20/7/22
2.	20/7/22

PRINCIPAL
Guru Nanak Dev Engg. College, Bidar

ABSTRACT

In this project we designed the simulation of windmill using OpenGL. We used transformation functions like translate and rotate functions to design blades of the windmill. We used many OpenGL inbuilt function to design the structure of windmill.
This project consist of many user defined function such as increasing windmill fan speed, decreasing windmill fan speed, side views, front and back views, custom angle of rotation of entire windmill structure.

It provides several options which can be interacted through menus. The user can also interact with program through mouse, keyboard functions. The options provided by the menu are views like side view, back view, front view, custom view. Using mouse, if we click left side it rotates to left and on successive clicking speed increases, if we click right button speed decreases and on successive clicking, it turns rotating towards right and vice versa.
We can rotate the entire windmill with respect to its axis using the arrow keys of keyboard. It can be rotate through 3600

Simulation of Windmill is a designed and implemented using a graphics software system called OpenGL which has became a widely accepted standard for developing graphic application. Using openGL functions user can create geometrical objects and can use translation, rotation, scaling with respect to the co-ordinate system.

The project Visual Transformation Techniques using openGL is based on Rotation and Translation processes using shading effects and is demonstrated using Visual C++.

The development of the Simulation of Windmill project has given us a good exposure to OpenGL by which we have learnt some of the technique which help in development of animated pictures, gaming. Hence it is helpful for us even to take up this field as our career too and develop some other features in OpenGL and provide as a token of contribution to the graphics world.

Simulation of Windmill consist of many user defined function such as increasing windmill fan speed, decreasing windmill fan speed, side views, front and back views, custom angle of rotation of entire windmill structure. All these function makes this project an example of animation in OpenGL.

PRINCIPAL
Guru Nanak Dev Engg. College, Bidar

Visvesvaraya Technological University, Belagavi

DEPARTMENT OF COMPUTER SCIENCE & ENGINEERING

GURU NANAK DEV ENGINEERING COLLEGE,

BIDAR-585401, KARNATAKA

CERTIFICATE

This is to certify that the mini project work entitled "RUBIK'S CUBE" is a Bonafide work carried out by **PRIYANKA B (3GN19CS073)** partial fulfilment of the requirements for the Bachelor's degree in Computer Science and Engineering of the Visvesvaraya Technological University, Belagavi during the academic year 2021-2022.

28/7/22

Signature of Guide

Prof. ASHWINI MANKAL

Signature of HOD

Dr.DAYANAND J

Head of Computer Science & Engineering Department,
Guru Nanak Dev Engineering College
B I D A R-585 403 (Karnataka)

EXTERNAL VIVA:

Examiners:

1) .....

2) 22/7/22

PRINCIPAL
Guru Nanak Dev Engg. College, Bidar

ABSTRACT

In this mini project we are going to see, a complex opengl project to show and solvethe puzzle of Rubik's Cube in OpenGL C++.The center cubies refer to the cubie pieces that are located at the center of each face ofthe Rubik's cube. There is a total of six cubies, and each has one face let, they always stick in the same location corresponding to each other and has a location right to it.he corner cubies refer to the cubic pieces that are located at the corner of the Rubik's cube. There is a total of eight corners, and each has three face lets and the edges also. The edge cubies refer to the edge pieces that are located between each pair of the two corresponding corners. There are 12 different edges in the Rubik's cube, and each hastwo Face lets.All cubes do not have the same color arrangements. The colors utilized for these illustrations is known as BOY (Blue, Orange, and Yellow, are faced in the clockwisedirection). Here, you need to analyze the locations of the centers corresponding to each other, as this is always your color arrangements. White is located opposite to yellow,Blue is located opposite to green,Orange is located opposite red.Orange is also located to the right of blue only if white is facing up along

The axes. The interaction between the windowing system and the OPENGL is initiated.One can Render a rubiks cube in 2 or 3 dimensions.In the 2 dimensions the cube must be flatten Such that the sides of the cube spread into the available space.In this case I used a custom Painting algoritm where I arbitrarily choose the location on each side.The cells of each face in the model are found based upon their position and the surface normal .

PRINCIPAL
Guru Nanak Dev Engg. College, Bidar

VISVESVARAYA TECHNOLOGICAL UNIVERSITY, BELAGAVI

GURU NANAK DEV ENGINEERING COLLEGE, BIDAR

DEPT. OF COMPUTER SCIENCE AND ENGINEERING

CERTIFICATE

This is to certify that the mini project work entitled " RUBIK'S CUBE Game" is a bonafide work carried out by Syed Zeeshan Hashmi (3GN19CS106), in partial fulfillment of the requirements for the **Bachelor's degree** in Computer Science and Engineering of the **Visvesvaraya Technological University, Belagavi** during the academic year 2021-2022.

12/7/22

Signature of Guide
Prof. Ashwini Mankal

Signature of HOD
Prof. DAYANAND J

Examiner's Signatures:

1. 12/7/22

2. 12/7/22

Head of Computer Science & Engineering Department,
Guru Nanak Dev Engineering College
BIDAR-585 403 (Karnataka)

PRINCIPAL
Guru Nanak Dev Engg. College, Bidar

ABSTRACT

In this mini project we are going to see, a complex opengl project to show and solve the puzzle of Rubik's Cube in OpenGL C++.

The cubies are divided into three different types:

Centre Cubies:

The center cubies refer to the cubie pieces that are located at the center of each face of the Rubik's cube. There is a total of six cubies, and each has one face let, they always stick in the same location corresponding to each other.

Corner Cubies:

The corner cubies refer to the cubic pieces that are located at the corner of the Rubik's cube. There is a total of eight corners, and each has three face lets.

Edge Cubies:

The edge cubies refer to the edge pieces that are located between each pair of the corresponding corners. There are 12 different edges in the Rubik's cube, and each has two Face lets.

All cubes do not have the same color arrangements. The colors utilized for these illustrations is known as BOY (Blue, Orange, and Yellow, are faced in the clockwise direction). Here, you need to analyze the locations of the centers corresponding to each other, as this is always your color arrangements.

White is located opposite to yellow.

Blue is located opposite to green.

Orange is located opposite red.

Orange is also located to the right of blue only if white is facing up

PRINCIPAL
Guru Nanak Dev Engg. College, Bidar

VISVESVARAYA TECHNOLOGICAL UNIVERSITY,BELAGAVI

GURU NANAK DEV ENGINEERING COLLEGE

DEPARTMENT OF COMPUTER SCIENCE AND ENGINEERING

CERTIFICATE

This is to certify that the mini project work entitled **"Solar System"** is a bonafide work carried out by **VINAY(3GN19CS120)** in the partial fulfillment of the requirements for the **Bachelor's degree** in Computer Science and Engineering of the **Visvesvaraya Technological University, Belagavi** during the academic year 2021-2022

12/7/22

.....

Signature of Guide
Prof. ASHWINI.M

Signature of HoO.D
DR. DAYANAND . J

Head of Computer Science & Engineering Department,
Guru Nanak Dev Engineering College
B I D A R-585 403 (Karnataka)

EXTERNAL VIVA: 22/7/22

Examiners: 1) ..... 2) .....

22/7/22

PRINCIPAL
Guru Nanak Dev Engg. College, Bidar

ABSTRACT

The Solar System consists of the Sun and the astronomical objects bound to it by gravity, all of which formed from the collapse of a giant molecular cloud approximately 4.6 billion years ago. Of the many objects that orbit the Sun, most of the mass is contained within eight relatively solitary planets[e] whose orbits are almost circular and lie within a nearly flat disc called the ecliptic plane. The four smaller inner planets, Mercury, Venus, Earth and Mars, also called the terrestrial planets, are primarily composed of rock and metal. The four outer planets, the gas giants, are substantially more massive than the terrestrials. The two largest, Jupiter and Saturn, are composed mainly of hydrogen and helium; the two outermost planets, Uranus and Neptune, are composed largely of ices, such as water, ammonia and methane, and are often referred to separately as "ice giants".

PRINCIPAL
Guru Nanak Dev Engg. College, Bidar

VISVESVARAYA TECHNOLOGICAL UNIVERSITY, BELAGAVI

GURU NANAK DEV ENGINEERING COLLEGE, BIDAR-585403, KARNATAKA

DEPARTMENT OF COMPUTER SCIENCE AND ENGINEERING

CERTIFICATE

This is to certify that the mini project work entitled **"3D CAR SIMULATION "** is a bonafide work carried out by **VAISHNAVI SERIKAR (3GN19CS116)** in partial fulfillment of the requirements for the **Bachelor's degree** in Computer Science and Engineering of the Visvesvaraya Technological University, Belagavi during the academic year 2021-2022.

Signature of Guide
Prof. Ashwini Mankal

Signature of HOD
Dr. DAYANAND J

Head of Computer Science & Engineering Department, Guru Nanak Dev Engineering College BIDAR-585 403 (Karnataka)

Examiner's Signatures:

1. 22/7/22
2. 22/7/22

PRINCIPAL
Guru Nanak Dev Engg. College, Bidar

ABSTRACT

3D computer graphics or three-dimensional computer graphics (in contrast with 2D computer graphics) are graphics that use a three dimensional representation of geometric data that is stored in the computer for the purposes of performing calculations and rendering 2D images. Such images may be stored for viewing later or displayed in real time.

3D computer graphics rely on many of the same algorithms as 2D computer vector graphics in the wire frame model and 2D computer raster graphics in the final rendered display. In computer graphics software, 2D applications may use 3D techniques to achieve effects such as lighting, and 3D may use 2D rendering techniques.

3D computer graphics are often referred to as 3D models. Apart from the rendered graphic, the model is contained within the graphical data file. However, there are differences: a 3D model is mathematical representation of any three-dimensional object. A model is not technically a graphic until it is displayed. A model can be displayed visually as a two-dimensional image through a process called 3D rendering or used in non-graphical computer simulations and calculations. With 3D printing, 3D models are similarly rendered into a 3D physical representation of the model, with limitations to how accurate the rendering can match the virtual model.

PRINCIPAL
Guru Nanak Dev Engg. College, Bidar

GURU NANAK DEV ENGINEERING COLLEGE

DEPARTMENT OF COMPUTER SCIENCE AND ENGINEERING

BIDAR-585403, KARNATAKA

Certificate

Certify that the Mini Project Work entitled **"CATCH ME IF YOU CAN"** work carriedout by **VAISHNAVI (3GN19CS113)**.Bonafide students of "GURU NANAK DEV ENGINEERING COLLEGE" in partial fulfilment for the 6th SEM of Bachelorof Engineering degree in CSE if Visvesvaraya Technological University, Belagavi during the academic year 2021-2022.It is certified that all corrections/suggestions indicated for Internal Assessment have been incorporated in the report deposited in the department library. The project report has been approved as it satisfies the academic requirements in respect of CG Laboratory with Mini project (18CSL67) prescribed for the said Degree.

18/7/22

Signature of Guide
Prof. ASHWINI MANKAL

Signature of HOD
Dr. DAYANAND J

Head of Computer Science & Engineering Department, Guru Nanak Dev Engineering College Bidar-585 403 (Karnataka)

EXTERNAL EXAMINATION

Name of the Examiners:

Signature with date

1. 22/7/22
2. 22/7/22

PRINCIPAL
Guru Nanak Dev Engg. College, Bidar

ABSTRACT

Computer Graphics has grown into a very important topic in the branch of Computer Science. This is due to an effective and rapid communication formed between man and the machine. Human eye can absorb the information in a displayed diagram or perspective diagram much faster than it can scan a page or a table of contents.

The main aim of the project to play the game. To start with the game an object will be moving on the screen. You have to catch the object by clicking the left mouse button on the object, there will be ten chances and each carries ten points. You can choose different level in the game. Aboutfshows about the game. Lev() shows different levels of the game. Keyboard() shows control from the keyboard. Mypos() shows current position. The project is implemented on C platform with the help of OpenGL in-built functions. Software used for execution is Visual studio 6.0 and Eclipse.

PRINCIPAL
Guru Nanak Dev Engg. College, Bidar

VISVESVARAYA TECHNOLOGICAL UNIVERSITY, BELAGAVI
GURU NANAK DEV ENGINEERING COLLEGE
BIDAR-585403, KARNATAKA

DEPARTMENT OF COMPUTER SCIENCE AND ENGINEERING

CERTIFICATE

This is to certify that the mini project work entitled "2D HELICOPTER" is a Bonafide work carried out by **NIMRA (3GN19CS061), ALI QUADRI (3GN19CS085), VIQUAR (3GN19CS087) & POOJA (3GN19CS066)** in partial fulfillment of the requirements for the Bachelor's degree in COMPUTER SCIENCE AND ENGINEERING of VISVESVARAYA TECHNOLOGICAL UNIVERSITY, BELAGAVI during the year 2021-2022. It is certified that this Mini Project Report has been approved as it satisfies the academic requirements.

18/7/22

SIGNATURE OF GUIDE

SIGNATURE OF HOD

Head of Computer Science & Engineering Department, Guru Nanak Dev Engineering College BIDAR-585 403 (Karnataka)

NAME OF EXAMINAR

SIGN WITH DATE

1. _____ 21/7/22

2. _____ 21/7/22

PRINCIPAL
Guru Nanak Dev Engg. College, Bidar

ABSTRACT

A 2d graphics based game helicopter is a great start for a student who starts learning computer graphics & visualization. The development of the game has large scope to learn computer graphics from scratch. We used OpenGL utility toolkit to implement the algorithm, written it in c++ language.

There is still scope left in the development of project like, after"game over" a list should show top ten scorers, a need to embed a button "play again". Welcome screen need more modification there is scope of embedding buttons like "about", "how to play", "configuration", "profiles", etc. In future we hope we would implement it in source code for better experience of playing this game.

Finally, we could say by developing the game we have learnt the basics of f computer graphics and in future by developing it further we shall learn more. It will be our pleasure if we could develop in 3d graphics package.

PRINCIPAL
Guru Nanak Dev Engg. College, Bidar

GURU NANAK DEV ENGINEERING COLLEGE

DEPARTMENT OF COMPUTER SCIENCE AND ENGINEERING

BIDAR-585403

CERTIFICATE

Certified that the Mini Project Work Project Work entitled "PACMAN" carried out by HASAN(3GN19CS030), MAHEK SULTANA(3GN19CS035), MALIHA NISHAT(3GN19CS037), MD SAQLAIN SAEED(3GN19CS042) Bonafide students of "GURU NANAK DEV ENGINEERING COLLEGE" in partial fulfilment for the 6TH SEM of Bachelor of Engineering degree in CSE of Visvesvaraya Technological University, Belagavi during the academic year 2021-2022.

Signature of guide
Prof. MASRATH BEGUM

Signature of HOD
Dr. DAYANAND J

EXTERNAL EXAMINATION

Name of the Examiners	Signature with date
1.	20/7/22
2.	20/7/22

PRINCIPAL
Guru Nanak Dev Engg. College, Bidar

ABSTRACT

- Main aim of this Mini Project is to illustrate the concepts and usage of pre-built functions in OpenGL.
- Creating objects and games like PacMan using Opengl library.
- When the location of PacMan is in + or – 10 pixels range of round spears the spears of that location are translated out of view port which creates an illusion as if PacMan has eaten that object.
- When location of PacMan is in range of rotating blades, then the looping function is changed.
- We have used input devices like mouse and key board to interact with program

PRINCIPAL
Guru Nanak Dev Engg. College, Bidar

VISVESVARAYA TECHNOLOGICAL UNIVERSITY, BELAGAVI

GURU NANAK DEV ENGINEERING COLLEGE, BIDAR

DEPT. OF COMPUTER SCIENCE AND ENGINEERING

CERTIFICATE

This is to certify that the mini project work entitled " RUBIK'S CUBE Game" is a bonafide work carried out by **M A MUQTADIR (3GN19CS034)** in partial fulfillment of the requirements for the **Bachelor's degree** in **Computer Science and Engineering** of the **Visvesvaraya Technological University, Belagavi** during the academic year 2021-2022.

Signature of Guide
Prof. MASARATH BEGUM

Signature of HOD
Prof. DAYANAND J

Examiner's Signatures:

1. MM 20/7/22
2. 20/7/22

PRINCIPAL
Guru Nanak Dev Engg. College, Bidar

ABSTRACT

In this mini project we are going to see, a complex opengl project to show and solve the puzzle of Rubik's Cube in OpenGL C++.

The cubies are divided into three different types:

Centre Cubies:
The center cubies refer to the cubie pieces that are located at the center of each face of the Rubik's cube. There is a total of six cubies, and each has one face let, they always stick in the same location corresponding to each other.

Corner Cubies:
The corner cubies refer to the cubic pieces that are located at the corner of the Rubik's cube. There is a total of eight corners, and each has three face lets.

Edge Cubies:
The edge cubies refer to the edge pieces that are located between each pair of the corresponding corners. There are 12 different edges in the Rubik's cube, and each has two Face lets.

All cubes do not have the same color arrangements. The colors utilized for these illustrations is known as BOY (Blue, Orange, and Yellow, are faced in the clockwise direction). Here, you need to analyze the locations of the centers corresponding to each other, as this is always your color arrangements.

White is located opposite to yellow.

Blue is located opposite to green.

Orange is located opposite red.

Orange is also located to the right of blue only if white is facing up

PRINCIPAL
Guru Nanak Dev Engg. College, Bidar

GURU NANAK DEV ENGINEERING COLLEGE,

VISVESVARAYA TECHNOLOGY UNIVERSITY, BELAGAVI

GURU NANAK DEV ENGINEERING COLLEGE,

BIDAR-585403, KARNATAKA

DEPARTMENT OF COMPUTER SCIENCE AND ENGINEERING

CERTIFICATE

This is to certify that the mini project work entitled "LIFT OVER BRIDGE " is a bonafide work carried out by SYEDA RUMANA SHIREEN 3GN19CS107 in partial fulfillment of the requirements for the award of B.E. in Computer Science and Engineering by Visvesvaraya Technological University, Belagavi during Academic year 2021-2022. It is certified that mini project report has been approved as it satisfies the academic requirements in respect of the mini project work prescribed for B.E

Signature of guide
Prof. MASRATH BEGAM

Signature of HOD
Dr. DAYANAND

Examiner 1:

Examiner 2:

PRINCIPAL
Guru Nanak Dev Engg. College, Bidar

ABSTRACT

'A picture is worth a thousand words' goes the ancient Chinese proverb. This has become a cliché in our society after the advent of inexpensive and simple techniques for producing pictures.

Computers have become a powerful medium for the rapid and economical production of pictures. There is virtually no area in which graphical displays cannot be used to some advantage. Graphics provide a so natural means of communicating with a computer that they have become widespread. The fields in which Computer Graphics find their uses are many. Some of them being User Interfaces, Computer Aided Design, Office automation, Desktop Publishing, Plotting of mathematical, scientific or industrial data, Simulation, Art, Presentations, Cartography, to name a few...Here, We have tried to incorporate and present the working environment of a Lift-Over Bridge which is also known as Bascule Bridge in 2D.

The bascule bridge works with a counterweight that balances the span (leaf) while the upward swing provides clearance for boat traffic. Here, we have created a scene consisting of the bascule bridge which operates to allow a boat to pass under it while a bus waits for the leaf of the bridge to swing back into its position and then passes along the bridge after the boat has sailed across. We have provided mouse interface to start and stop animation and to exit the window. We have also included the keyboard input function to change the color of the boat.

PRINCIPAL
Guru Nanak Dev Engg. College, Bidar

DEPARTMENT OF COMPUTER SCIENCE AND ENGINEERING

CERTIFICATE

This is to certify that the mini project work entitled**"3D BIKE SIMULATION"** is a bonafide work carried out by TAJINDER SINGH (3GN19CS108). in partial fulfilment of the requirements for the Bachelor's degree in COMPUTER SCIENCE AND ENGINEERING of VISVESVARAYA TECHNOLOGICAL UNIVERSITY, BELAGAVI during the year 2021-2022. It is certified that this Mini Project Report has been approved as it satisfies the academic requirements.

13/7/22

SIGNATURE OF GUIDE

SIGNATURE OF HOD

Head of Computer Science & Engineering Department, Guru Nanak Dev Engineering College BIDAR-585 403 (Karnataka)

1. 22/7/22

2. 22/7/22

PRINCIPAL
Guru Nanak Dev Engg. College, Bidar

ABSTRACT

This Project is on **"3D BIKE SIMULATION"** Computer Graphics using OpenGL Functions. It is a User interactive program where the User can view the required display by making use of the input devices like Keyboard and Mouse. This project mainly consists of a bike and a robot. The Robot is made to sit on the bike, so that it looks like a man riding it.The bike can be viewed in any direction and at any angle. The bike is accelerated and its movements are controlled using the keyboard. For viewing, we make use of the mouse. The bike is ridden on a polygonal surface, which looks like a giant rectangular mesh. Lighting has been incorporated on only one side-Viewer side.

PRINCIPAL
Guru Nanak Dev Engg. College, Bidar

VISVESVARAYA TECHNOLOGICAL UNIVERSITY, BELAGAVI

GURU NANAK DEV ENGINEERING COLLEGE, BIDAR-585 403

DEPT. OF COMPUTER SCIENCE AND ENGINEERING

CERTIFICATE

This is to certify that mini project work entitled "**GRAPHICAL SIMULATION OF A SHIP**" is a bonafide work carried out by SOUNDARYA ALLI (3GN19CS100)in partial fulfillment requirements for the award of B.E in Computer Science and Engineering of the Visvesvaraya Technological University, Belagavi during the academic year 2021-2022

18/7/22

Signature of Guide

Prof. ASHWINI PAMPATWAR

Signature of H.O.D

Prof. DAYANAND
Engineering Department,
Guru Nanak Dev Engineering College
BIDAR-585 403 (Karnataka)

External viva:.....

Examiners: 1)..... 2).....

22/7/22

PRINCIPAL
Guru Nanak Dev Engg. College, Bidar

ABSTRACT

This project demonstrates a simple simulation of a ship in different environments. Here the different times of day are represented with different colors for background and lighting. We have also provided a movement operation for the ship with an ability to shoot projectiles from any given position. Here we use the keyboard as an input device. Keyboard events are generated when the mouse is in the window and one of the keys is pressed or released. The GLUT function glutKeyboardFunc is the callback for events generated by pressing the key. When it occurs the ASCII code for the key that generated the event and the location of the mouse are returned. All the keyboard callbacks are registered in a single callback function, such as the following: glutKeyboardFunc(keyboard); The callback is specified in GLUT by the following function call: glutDisplayFunc(display); It is invoked when GLUT determines that the window should be redisplayed.

PRINCIPAL
Guru Nanak Dev Engg. College, Bidar

VISVESVARAYA TECHNOLOGICAL UNIVERSITY, BELAGAVI

GURU NANAK DEV ENGINEERING COLLEGE, BIDAR

DEPT. OF COMPUTER SCIENCE AND ENGINEERING

CERTIFICATE

This is to certify that the mini project work entitled " HELICOPTER GAME" is a bonafide work carried out by **ISHPREET KAUR (3GN19CS031)** in partial fulfillment of the requirements for the **Bachelor's degree** in Computer Science and Engineering of the **Visvesvaraya Technological University, Belagavi** during the academic year 2021-2022.

Signature of Guide
Prof. MASARATH BEGUM

Signature of HOD
Prof. DAYANAND J

Examiner's Signatures:

1. 20/7/22
2. 20/7/22

PRINCIPAL
Guru Nanak Dev Engg. College, Bidar

ABSTRACT

A 2D graphics based game helicopter is a great start for a student who starts learning computer graphics & visualization. The development of the game has large scope to learn computer graphics from scratch. We used OpenGL utility toolkit to implement the algorithm, written it in c++ language.

There is still scope left in the development of project like, after "game over" a list should show top ten scorers, a need to embed a button "play again". Welcome screen need more modification there is scope of embedding buttons like "about", "how to play", "configuration", "profiles", etc. In future we hope we would implement it in source code for better experience of playing this game.

Finally, we could say by developing the game we have learnt the basics of f computer graphics and in future by developing it further we shall learn more. It will be our pleasure if we could develop in 3d graphics package.

PRINCIPAL
Guru Nanak Dev Engg. College, Bidar

VISVESVARAYA TECHNOLOGICAL UNIVERSITY, BELAGAVI

GURU NANAK DEV ENGINEERING COLLEGE, BIDAR

DEPT. OF COMPUTER SCIENCE AND ENGINEERING

CERTIFICATE

This is to certify that the mini project work entitled " HELICOPTER GAME" is a bonafide work carried out by **GOLDEN KUMAR (3GN19CS028)** in partial fulfillment of the requirements for the **Bachelor's degree** in Computer Science and Engineering of the **Visvesvaraya Technological University, Belagavi** during the academic year 2021-2022.

Signature of Guide
Prof. MASARATH BEGUM

Signature of HOD
Prof. DAYANAND J

Examiner's Signatures:

1. 20/7/22
2. 20/7/22

PRINCIPAL
Guru Nanak Dev Engg. College, Bidar

ABSTRACT

A 2D graphics based game helicopter is a great start for a student who starts learning computer graphics & visualization. The development of the game has large scope to learn computer graphics from scratch. We used OpenGL utility toolkit to implement the algorithm, written it in c++ language.

There is still scope left in the development of project like, after "game over" a list should show top ten scorers, a need to embed a button "play again". Welcome screen need more modification there is scope of embedding buttons like "about", "how to play", "configuration", "profiles", etc. In future we hope we would implement it in source code for better experience of playing this game.

Finally, we could say by developing the game we have learnt the basics of f computer graphics and in future by developing it further we shall learn more. It will be our pleasure if we could develop in 3d graphics package.

PRINCIPAL
Guru Nanak Dev Engg. College, Bidar

GURU NANAK DEV ENGINEERING COLLEGE

DEPARTMENT OF COMPUTER SCIENCE AND ENGINEERING

BIDAR-585403

CERTIFICATE

Certified that the Mini Project Work Project Work entitled "WINDMILL" carried out by ASFA SHARIYA(3GN19CS016), MD MAQSOOD ALI(3GN19CS040), MOHD ARIFUDDIN(3GN19CS049), MOHD ARBAZ(3GN19CS050) Bonafide students of "GURU NANAK DEV ENGINEERING COLLEGE" in partial fulfilment for the 6TH SEM of Bachelor of Engineering degree in CSE of Visvesvaraya Technological University, Belagavi during the academic year 2021-2022.

21/7/22

Signature of guide
Prof.MASARATH BEGUM

Signature of HOD
Dr. DAYANAND J
Head of Computer Science & Engineering Department,
Guru Nanak Dev Engineering College
BIDAR-585 403 (Karnataka)

EXTERNAL EXAMINATION

Name of the Examiners | Signature with date

1. 23/7/22
2. 23/7/22

PRINCIPAL
Guru Nanak Dev Engg. College, Bidar

ABSTRACT

In this project we designed the simulation of windmill using OpenGL. We used transformation functions like translate and rotate functions to design blades of the windmill. We used many OpenGL inbuilt function to design the structure of windmill.
This project consist of many user defined function such as increasing windmill fan speed, decreasing windmill fan speed, side views, front and back views, custom angle of rotation of entire windmill structure.

It provides several options which can be interacted through menus. The user can also interact with program through mouse, keyboard functions. The options provided by the menu are views like side view, back view, front view, custom view. Using mouse, if we click left side it rotates to left and on successive clicking speed increases, if we click right button speed decreases and on successive clicking, it turns rotating towards right and vice versa.
We can rotate the entire windmill with respect to its axis using the arrow keys of keyboard. It can be rotate through 3600

Simulation of Windmill is a designed and implemented using a graphics software system called OpenGL which has became a widely accepted standard for developing graphic application. Using openGL functions user can create geometrical objects and can use translation, rotation, scaling with respect to the co-ordinate system.

The project Visual Transformation Techniques using openGL is based on Rotation and Translation processes using shading effects and is demonstrated using Visual C++.

The development of the Simulation of Windmill project has given us a good exposure to OpenGL by which we have learnt some of the technique which help in development of animated pictures, gaming. Hence it is helpful for us even to take up this field as our career too and develop some other features in OpenGL and provide as a token of contribution to the graphics world.

Simulation of Windmill consist of many user defined function such as increasing windmill fan speed, decreasing windmill fan speed, side views, front and back views, custom angle of rotation of entire windmill structure. All these function makes this project an example of animation in OpenGL.

PRINCIPAL
Guru Nanak Dev Engg. College, Bidar

DEPARTMENT OF COMPUTER SCIENCE AND ENGINEERING

CERTIFICATE

Certified that the computer graphics project titled ***PACMAN*** *carried out by Mr.* ***Darshan Rampure (USN:3GN19CS123), Mr. Trayoudh PATIL(USN:3GN19CS110), Mr. rohan (USN: 3GN19CS078) RAM KUMAR(USN:3GN19CS076)*** *in partial fulfilment for the award of Bachelor of Technology in* ***COMPUTER SCIENCE AND ENGINEERING*** *of Guru nanak dev engineering college, during the year 2021-22. It is certified that all corrections/suggestions indicated for Internal Assessment have been incorporated in the report deposited in the departmental library. The computer graphics project report has been approved as it satisfies the academic requirements in respect of project work prescribed for the said degree.*

ASHWINIDr. DAYANAND J

12/7/22

Signature of the Guide *Signature of the HOD*

Examiners

Name of the examiners **Signature with date**

1 22/7/22

2 22/7/22

PRINCIPAL

Guru Nanak Dev Engg. College, Bidar

ABSTRACT

This project discusses about the popular Pacman game using java. I built a simple Pacman implementation with the maze, a Pac-man and Pac-dots for the Pac-man to eat. For this, I created a total of eight Pac-man images, one of which is displayed depending on direction with alternating open/closed mouth. The Pac-man moves around legal positions randomly and eats the Pac-dots. I added several ghosts. With checking to see if the game has ended (ghost catches Pacman or Pacman eats all of the dots) this second increment was completed. Although the most noticeable feature of the game is the graphics representation, the implementation involves multi-threading using synchronized methods and algorithms from Data Structures.

PRINCIPAL
Guru Nanak Dev Engg. College, Bidar

VISVESVARAYA TECHNOLOGICAL UNIVERSITY, BELAGAVI

GURU NANAK DEV ENGINEERING COLLEGE, BIDAR

DEPARTMENT OF INFORMATION SCIENCE & ENGINEERING

CERTIFICATE

This is to certify that the mini project work and titled "ONLINE APTITUDE TEST MANAGEMENT SYSTEM" is a bonafide work carried out by AKASH (3GN18IS003), ANIKETH J(3GN18IS006), MD MINHAZ(3GN18IS013) in partial full-filament of the requirements for the award B.E-in Information Science & Engineering by Visvesvaraya Technological University, Belagavi during academic year 2021-22. It is certified that the mini-project has been approved as it satisfies the academic requirements in respect of the mini project work prescribed for B.E .

23/03/2022

Signature of Guide

Prof. SHILPA TARNALLE

23/03/2022

Signature of HOD

Prof. RAMESH KUMAR PATIL

EXAMINER 1:

EXAMINER 2:

PRINCIPAL
Guru Nanak Dev Engg. College, Bidar

ABSTRACT

Online Aptitude Exam Generation system is a web based system. This System is smart enough to find the student level within short interval of time and to produce the accurate result. The main feature in this system is the concept of timer, timer is to be added to every question for analyzing the answer to set to the level of the paper. This system is proposed to deal with online objective type questions where the system analyze and studies the students answer depending upon the difficulty level and the time taken by the student to attempt that particular question. This system describes the conduction of online examination system for the objective type of exam. It also points out the way of attempting the question depending upon time taken .

PRINCIPAL
Guru Nanak Dev Engg. College, Bidar

VISVESVARAYA TECHNOLOGICAL UNIVERSITY, BELAGAVI

GURU NANAK DEV ENGINEERING COLLEGE, BIDAR

ESSENCE OF WISDOM IS SERVICE OF HUMANITY

GURU NANAK DEV ENGINEERING COLLEGE

BIDAR • INDIA

DEPARTMENT OF INFORMATION SCIENCE & ENGINEERING

CERTIFICATE

This is to certify that the mini project work and titled " ELECTRICITY BILL MANAGEMENT SYSTEM." is a bonafide work carried out by SAIKIRAN (3GN18IS019), SANKLAP R(3GN18IS021), SATISH (3GN18IS022) in partial full-filament of the requirements for the award B.E-in Information Science & Engineering by Visvesvaraya Technological University, Belagavi during academic year 2021-22. It is certified that the mini-project has been approved as it satisfies the academic requirements in respect of the mini project work prescribed for B.E .

23/03/2022

23/03/2022

Signature of Guide

Prof. SHILPA TARNALLE

Signature of HOD

Prof. RAMESH KUMAR PATIL

EXAMINER 1:

EXAMINER 2:

PRINCIPAL

Guru Nanak Dev Engg. College, Bidar

ABSTRACT

Science and technology with all its fascinating advancements has been taking human life standards to the next level. The whole world will be literally jammed without these innovations. This project is an innovation, which makes the way of paying electricity bill simple compared to other existing projects. This project has been implemented using Java Swing as front end and MySQL as back end. The purpose of the project is to build an application program to reduce the manual work for managing the amount of units consumed by the customers and generating the electricity bill according to the type of customer – individual or commercial. It displays the details of the customers, units consumed by them and bill history. It enables them pay their bill if not paid. The date of payment will be updated while paying the bill. It maintains error free database and easily incorporates the future developments and changes.

PRINCIPAL
Guru Nanak Dev Engg. College, Bidar

VISVESVARAYA TECHNOLOGICAL UNIVERSITY, BELAGAVI

GURU NANAK DEV ENGINEERING COLLEGE, BIDAR

DEPARTMENT OF INFORMATION SCIENCE & ENGINEERING

CERTIFICATE

This is to certify that the mini project work and titled " ONLINE RETAIL APPLICATION DATABASE." is a bonafide work carried out by ABDUL AAMIRKHAN (3GN19IS001), ABHISHEK G (3GN19IS002), DATTATRI (3GN19IS003) in partial full-filament of the requirements for the award B.E-in Information Science & Engineering by Visvesvaraya Technological University, Belagavi during academic year 2021-22. It is certified that the mini-project has been approved as it satisfies the academic requirements in respect of the mini project work prescribed for B.E.

23/03/2022

Signature of Guide

Prof. SHILPA TARNALLE

23/03/2022

Signature of HOD

Prof. RAMESH KUMAR PATIL

EXAMINER 1:

EXAMINER 2:

PRINCIPAL
Guru Nanak Dev Engg. College, Bidar

ABSTRACT

This project is a web based shopping system for an existing shop. The project objective is to deliver the online shopping application into android platform. This project is an attempt to provide the advantages of online shopping to customers of a real shop. It helps buying the products in the shop any where through internet by using an android device. Thus the customer will get the service of online shopping and home delivery from his favorite shop. This system can be implemented to any shop in the locality or to multinational branded shops having retail outlet chains.

PRINCIPAL
Guru Nanak Dev Engg. College, Bidar

VISVESVARAYA TECHNOLOGICAL UNIVERSITY, BELAGAVI

GURU NANAK DEV ENGINEERING COLLEGE, BIDAR

ESSENCE OF WISDOM IS SERVICE OF HUMANITY

GURU NANAK DEV ENGINEERING COLLEGE

BIDAR • INDIA

DEPARTMENT OF INFORMATION SCIENCE & ENGINEERING

CERTIFICATE

This is to certify that the mini project work and titled " INVENTORY CONTROL MANAGEMENT." is a bonafide work carried out by ISHRATH JABEEN (3GN19IS004), KRISHNA (3GN19IS005), LAXMI (3GN19IS006) in partial full-filament of the requirements for the award B.E-in Information Science & Engineering by Visvesvaraya Technological University, Belagavi during academic year 2021-22. It is certified that the mini-project has been approved as it satisfies the academic requirements in respect of the mini project work prescribed for B.E .

23/03/2022

Signature of Guide

Prof. SHILPA TARNALLE

23/03/2022

Signature of HOD

Prof. RAMESH KUMAR PATIL

EXAMINER 1:

EXAMINER 2:

PRINCIPAL

Guru Nanak Dev Engg. College, Bidar

ABSTRACT

Inventory management system which is helpful for the business operators, where shopkeeper keep the records of purchase and sales. Mismanaged inventory means disappointed customers ,too much cash tied up in slower sale and warehouses .This inventory is eliminate paper work, human faults , manual delay and speed up process .This inventory management system will have the ability to track sales and available inventory, tells a shopkeeper when it's time to reorder and how much to purchase. Inventory management system is windows application developed for windows operating systems which focused in the area of inventory control and generate .The software is made up of two parts: The frontend is developed using Microsoft Visual basic 2010 and the Backend from SQL server Database 2008. Keywords: Database, Inventory, public, software.

PRINCIPAL
Guru Nanak Dev Engg. College, Bidar

VISVESVARAYA TECHNOLOGICAL UNIVERSITY, BELAGAVI

GURU NANAK DEV ENGINEERING COLLEGE, BIDAR

DEPARTMENT OF INFORMATION SCIENCE & ENGINEERING

CERTIFICATE

This is to certify that the mini project work and titled " LIBRARY MANAGEMENT SYSTEM.." is a bonafide work carried out by MD AAMER (3GN19IS007), MD IBRAHIM (3GN19IS008), MD AHTESHAM AHMED (3GN19IS010) in partial full-filament of the requirements for the award B.E-in Information Science & Engineering by Visvesvaraya Technological University, Belagavi during academic year 2021-22. It is certified that the mini-project has been approved as it satisfies the academic requirements in respect of the mini project work prescribed for B.E .

23/03/2022

Signature of Guide

Prof. SHILPA TARNALLE

23/03/2022

Signature of HOD

Prof. RAMESH KUMAR PATIL

EXAMINER 1:

EXAMINER 2:

PRINCIPAL
Guru Nanak Dev Engg. College, Bidar

ABSTRACT

With the advancement of technology, it is imperative to exalt all the systems into a user-friendly manner. The Library Management system (LMS) acts as a tool to transform traditional libraries into digital libraries. In traditional libraries, the students/user has to search for books which are hassle process and there is no proper maintenance of database about issues/fines. The overall progress of work is slow and it is impossible to generate a fast report. The librarians have to work allotted for arranging, sorting books in the book sells. At the same time, they have to check and monitor the lend/borrow book details with its fine. It is a tedious process to work simultaneously in different sectors. LMS will assist the librarians to work easily. The LMS supports the librarians to encounter all the issues concurrently. The users need not stand in a queue for a long period to return/borrow a book from the library. The single PC contains all the data's in it. The librarians have to assess the system and provide an entry in it. Through LMS the librarian can find the book in the bookshelves. The LMS is designed with the basic features such as librarian can add/view/update/delete books and students' details in it. Once he/she ingress into the system they can modify any data's in the database. The complete model is developed in Dot net technology, the C# language is used to build the front end application whereas the SQL server is exploiting as database.

PRINCIPAL
Guru Nanak Dev BMB College, Bidar

VISVESVARAYA TECHNOLOGICAL UNIVERSITY, BELAGAVI

GURU NANAK DEV ENGINEERING COLLEGE, BIDAR

DEPARTMENT OF INFORMATION SCIENCE & ENGINEERING

CERTIFICATE

This is to certify that the mini project work and titled " STUDENT DATABASE MANAGEMENT." is a bonafide work carried out by AAMER (3GN19IS007), MD IBRAHIM (3GN19IS008), MD AHTESHAM AHMED (3GN19IS010) in partial full-filament of the requirements for the award B.E-in Information Science & Engineering by Visvesvaraya Technological University, Belagavi during academic year 2021-22. It is certified that the mini-project has been approved as it satisfies the academic requirements in respect of the mini project work prescribed for B.E .

23/03/2022

Signature of Guide

Prof. SHILPA TARNALLE

23/03/2022

Signature of HOD

Prof. RAMESH KUMAR PATIL

EXAMINER 1:

EXAMINER 2:

PRINCIPAL
Guru Nanak Dev Engg. College, Bidar

ABSTRACT

In this scholarly thesis pertinent to the setting up of a automated student performance record management system which enables the users of a university like student and faculty to access the important information with ease through a user friendly web application. This proposed system aims at eliminating the practice of time consuming and vulnerable tradition of manual maintenance of student information in paper at the very basic level. In a university there are many departments all these departments provide various records regarding student. Most of these track records need to maintain information about the students. Thus by proposing a computerizes student record management system will enable the users to access data at any time and any place. The student web portal enables huge storage of data and easy retrieval. There are many departments in a college thus but introducing a student web portal will centralize the administration and the entire system will work as one single entity. The paper work would be reduced and number of workers in each department staff also reduces as one single operator can run this web application

PRINCIPAL
Guru Nanak Dev Engg. College, Bidar

VISVESVARAYA TECHNOLOGICAL UNIVERSITY, BELAGAVI

GURU NANAK DEV ENGINEERING COLLEGE, BIDAR

ESSENCE OF WISDOM IS SERVICE OF HUMANITY

GURU NANAK DEV ENGINEERING COLLEGE

BIDAR • INDIA

DEPARTMENT OF INFORMATION SCIENCE & ENGINEERING

CERTIFICATE

This is to certify that the mini project work and titled " PAYROLL MANAGEMENT SYSTEM." is a bonafide work carried out by NABEELA KHANAM (3GN19IS011), NEELAM BANU (3GN19IS012), NEELAMBIKA (3GN19IS013) in partial full-filament of the requirements for the award B.E-in Information Science & Engineering by Visvesvaraya Technological University, Belagavi during academic year 2021-22. It is certified that the mini-project has been approved as it satisfies the academic requirements in respect of the mini project work prescribed for B.E .

23/03/2022

Signature of Guide

Prof. SHILPA TARNALLE

23/03/2022

Signature of HOD

Prof. RAMESH KUMAR PATIL

EXAMINER 1:

EXAMINER 2:

PRINCIPAL

Guru Nanak Dev Engg. College, Bidar

ABSTRACT

"Employee Database And Payroll Management System" is designed to make the existing manual system automatic with the help of computerised equipment and full-edged computer software, fulfilling their requirements, so that their valuable data and information can be stored for a longer period with easy access and manipulation of the same. The required software is easily available and easy to work with. This web application can maintain and view computerised records without getting redundant entries. The project describes how to manage user data for good performance and provide better services for the client.

PRINCIPAL
Guru Nanak Dev Engg. College, Bidar

VISVESVARAYA TECHNOLOGICAL UNIVERSITY, BELAGAVI

GURU NANAK DEV ENGINEERING COLLEGE, BIDAR

DEPARTMENT OF INFORMATION SCIENCE & ENGINEERING

CERTIFICATE

This is to certify that the mini project work and titled " VOICE-BASED TRANSPORT ENQUIRY SYSTEM." is a bonafide work carried out by NIKITA B (3GN19IS014), NIKITA PATIL (3GN19IS015), PALLAVI (3GN19IS016) in partial full-filament of the requirements for the award B.E- in Information Science & Engineering by Visvesvaraya Technological University, Belagavi during academic year 2021-22. It is certified that the mini-project has been approved as it satisfies the academic requirements in respect of the mini project work prescribed for B.E .

23/03/2022

Signature of Guide
Prof. SHILPA TARNALLE

23/03/2022

Signature of HOD
Prof. RAMESH KUMAR PATIL

EXAMINER 1:

EXAMINER 2: Skomdi

PRINCIPAL
Guru Nanak Dev Engg. College, Bidar

ABSTRACT

Now this is the age of speed. Everything happens in the speed of supersonic. The data can be transferred at the speed of light in the digital medium, can travel in the supersonic speed, hence three is a need of information inflow in the same speed. Here is one such need of information fast enough. We have experienced in waiting to a transport terminals for transport controllers to get the information about the transport facility. We encounter so many times there will be no person for providing these information which significantly wastes the time just to know whether there is any facility or not. Here is one solution for such a problem which lessens the human intervention in providing such information in the transport terminals.

PRINCIPAL
Guru Nanak Dev Engg. College, Bidar

VISVESVARAYA TECHNOLOGICAL UNIVERSITY, BELAGAVI

GURU NANAK DEV ENGINEERING COLLEGE, BIDAR

DEPARTMENT OF INFORMATION SCIENCE & ENGINEERING

CERTIFICATE

This is to certify that the mini project work and titled " SMS-BASED REMOTE SERVER MONITORING SYSTEM." is a bonafide work carried out by PAYAL (3GN19IS017), POOJA (3GN19IS018), PREETI (3GN19IS019) in partial full-filament of the requirements for the award B.E-in Information Science & Engineering by Visvesvaraya Technological University, Belagavi during academic year 2021-22. It is certified that the mini-project has been approved as it satisfies the academic requirements in respect of the mini project work prescribed for B.E .

Signature of Guide

Prof. SHILPA TARNALLE

Signature of HOD

Prof. RAMESH KUMAR PATIL

EXAMINER 1:

EXAMINER 2:

PRINCIPAL

Guru Nanak Dev Engg. College, Bidar

ABSTRACT

The utility model discloses an SMS-based device monitoring a server remotely and processing failures in order to solve problems of the prior art that ports of different application services in the server cannot be monitored and a cell phone cannot be utilized for processing the failures remotely. The SMS-based device monitoring the server remotely and processing the failures includes a local area network, an SMS modem, a mobile network and a cell phone. The cell phone terminal is used for receiving alarm short messages and sending short messages to the to-be-monitored server through the mobile network and the short message modem and collecting states of the server and the services in real time through a monitoring program. When an abnormal state is collected, the monitoring program sends the alarm messages to the predetermined cell phone through an SMS platform and the SMS modem automatically by utilizing the mobile network. The SMS-based device monitoring the server remotely and processing the failures is not provided with a client terminal. The servers in the local area network can be monitored only through one service terminal. Therefore, the SMS-based device monitoring the server remotely and processing the failures provided by the utility model has characteristics of low cost, high practical applicability, convenient usage and the like.

PRINCIPAL
Guru Nanak Dev Engg. College, Bidar

VISVESVARAYA TECHNOLOGICAL UNIVERSITY, BELAGAVI

GURU NANAK DEV ENGINEERING COLLEGE, BIDAR

ESSENCE OF WISDOM IS SERVICE OF HUMANITY

GURU NANAK DEV ENGINEERING COLLEGE

BIDAR • INDIA

DEPARTMENT OF INFORMATION SCIENCE & ENGINEERING

CERTIFICATE

This is to certify that the mini project work and titled " AIRLINE MANAGEMENT MINI DBMS PROJECT" is a bonafide work carried out by PRIYANKA P (3GN19IS020), PRIYANKA (3GN19IS021), RAHUL K (3GN19IS022) in partial full-filament of the requirements for the award B.E- in Information Science & Engineering by Visvesvaraya Technological University, Belagavi during academic year 2021-22. It is certified that the mini-project has been approved as it satisfies the academic requirements in respect of the mini project work prescribed for B.E .

23/03/2022

Signature of Guide

Prof. SHILPA TARNALLE

23/03/2022

Signature of HOD

Prof. RAMESH KUMAR PATIL

EXAMINER 1:

EXAMINER 2:

PRINCIPAL

Guru Nanak Dev Engg. College, Bidar

ABSTRACT

Airline reservation System is a computerized system used to store and retrieve information and conduct transactions related to air travel. The project is aimed at exposing the relevance and importance of Airline Reservation Systems. It is projected towards enhancing the relationship between customers and airline agencies through the use of ARSs, and thereby making it convenient for the customers to book the flights as when they require such that they can utilize this software to make reservations.

This software has two parts. First is user part and the administrator part. User part is used as a front end and administrator is the back end. Administrator is used by airline authority. It will allow the customers to access database and allow new customers to sign up for online access. The system allows the airline passenger to search for flights that are available between the two travel cities, namely the "Departure city" and "Arrival city" for a particular departure and arrival dates. The system displays all the flight's details such as flight no, name, price and duration of journey etc. After search the system display list of available flights and allows customer to choose a particular flight.

PRINCIPAL
Guru Nanak Dev Engg. College, Bidar

VISVESVARAYA TECHNOLOGICAL UNIVERSITY, BELAGAVI

GURU NANAK DEV ENGINEERING COLLEGE, BIDAR

DEPARTMENT OF INFORMATION SCIENCE & ENGINEERING

CERTIFICATE

This is to certify that the mini project work and titled " AGRI SALES MANAGEMENT DBMS FREE PROJECT" is a bonafide work carried out by SAIKIRAN (3GN19IS023), SANGMESH (3GN19IS024), SHADAN M (3GN19IS025) in partial full-filament of the requirements for the award B.E-in Information Science & Engineering by Visvesvaraya Technological University, Belagavi during academic year 2021-22. It is certified that the mini-project has been approved as it satisfies the academic requirements in respect of the mini project work prescribed for B.E .

Signature of Guide

Prof. SHILPA TARNALLE

Signature of HOD

Prof. RAMESH KUMAR PATIL

EXAMINER 1:

EXAMINER 2:

PRINCIPAL
Guru Nanak Dev Engg. College, Bidar

ABSTRACT

The project concerns about how a cereals board buy farm products from farmers and also selling them farm inputs eg fertilizer and farm seeds. Problem statement. A cereals board requires a farmer to apply for a certain amount of fertilizer based on his/her farm acreage(this includes his/her land and the ones obtained through leasing. The amount of fertilizer applied should not exceed the recommended amount stipulated in the farm size per each individual farmer. The system should be able to notify the farmer that his/her application has been processed then he/she is given a go ahead to go and pay at the bank using the code sent to him and when should he/she pick her inputs after paying the bank should notify the cereals board automatically that so and so has paid certain amount of money using the specified code. The cereals board processes the payment and notifies the collector at the cereals port to dispatch certain amount of fertilizer to so and so, the system should also notify the farmer to pick his/her purchases at the collection point specifying the date and time. The system should also capture details of farmers selling the farm produce to the cereals board and when should the farmers receive the money from the sales.

PRINCIPAL
Dr. Vikram Dev Singh College, Bidar

VISVESVARAYA TECHNOLOGICAL UNIVERSITY, BELAGAVI

GURU NANAK DEV ENGINEERING COLLEGE, BIDAR

ESSENCE OF WISDOM IS SERVICE OF HUMANITY

GURU NANAK DEV ENGINEERING COLLEGE

BIDAR • INDIA

DEPARTMENT OF INFORMATION SCIENCE & ENGINEERING

CERTIFICATE

This is to certify that the mini project work and titled " HOTEL MANAGEMENT JAVA MINI DBMS PROJECT" is a bonafide work carried out by S MOHIUDDIN Q W (3GN19IS026), SHAIK IMRAN PASHA (3GN19IS027), SHOEB AHMED KHAN (3GN19IS029) in partial full-filament of the requirements for the award B.E-in Information Science & Engineering by Visvesvaraya Technological University, Belagavi during academic year 2021-22. It is certified that the mini-project has been approved as it satisfies the academic requirements in respect of the mini project work prescribed for B.E .

23/03/2022

Signature of Guide

Prof. SHILPA TARNALLE

23/03/2022

Signature of HOD

Prof. RAMESH KUMAR PATIL

EXAMINER 1:

EXAMINER 2:

PRINCIPAL

Guru Nanak Dev Engg. College, Bidar

ABSTRACT

The aim of this Online Hotel Management System project is to build a system that will able to automate many operations in a hotel. Modern day hotels aim to create a user friendly atmosphere with the availability of concierges who remember frequent visitors and making it possible to call and make reservations. While such hotels are extremely expensive, such a service can also be provided in a cost – effective manner with the use of computers.

The process begins when a customer books a room, the booking can be placed online or through an Interactive Voice Response System (IVRS). The system will remember client preferences and can provide options accordingly. Once the room is booked, the visitor only needs to turn up and present identification. The system will also be able to send messages to the visitor's phone to remind them of restaurants they may have visited in the past and other options. The system can accept bookings for restaurants present in the hotel. Things – to – do around the locality can be advertised as well through messages.

PRINCIPAL
Guru Nanak Dev Engg. College, Bidar

VISVESVARAYA TECHNOLOGICAL UNIVERSITY, BELAGAVI

GURU NANAK DEV ENGINEERING COLLEGE, BIDAR

ESSENCE OF WISDOM IS SERVICE OF HUMANITY

GURU NANAK DEV ENGINEERING COLLEGE

BIDAR • INDIA

DEPARTMENT OF INFORMATION SCIENCE & ENGINEERING

CERTIFICATE

This is to certify that the mini project work and titled " STORE MANAGEMENT MINI DBMS PROJECT " is a bonafide work carried out by SOUMYA BAWAGE (3GN19IS030), SRASHTI (3GN19IS031), SUVARNA (3GN19IS032) in partial full-fillment of the requirements for the award B.E- in Information Science & Engineering by Visvesvaraya Technological University, Belagavi during academic year 2021-22. It is certified that the mini-project has been approved as it satisfies the academic requirements in respect of the mini project work prescribed for B.E .

23/03/2022

Signature of Guide

Prof. SHILPA TARNALLE

23/03/2022

Signature of HOD

Prof. RAMESH KUMAR PATIL

EXAMINER 1:

EXAMINER 2:

PRINCIPAL

Guru Nanak Dev Engg. College, Bidar

ABSTRACT

The main aim of Apartment Management Mini DBMS project is to rent apartments and get payments from respective tenants. We aim to demonstrate the use of create, read, update and delete MySQL operations through this project. The project starts by creating a Owner and by adding details of tenant buying apartment. The owner provides building & apartment details to their tenant with the start date of rent. The tenants should pay their rents to the owner after every month completion.

PRINCIPAL
Guru Nanak Dev Engg. College, Bidar

VISVESVARAYA TECHNOLOGICAL UNIVERSITY, BELAGAVI

GURU NANAK DEV ENGINEERING COLLEGE, BIDAR

DEPARTMENT OF INFORMATION SCIENCE & ENGINEERING

CERTIFICATE

This is to certify that the mini project work and titled " DAIRY MANAGEMENT JAVA MINI DBMS PROJECT " is a bonafide work carried out by SYED WAQAS HUSSAIN (3GN19IS036), VAISHNAVI PATIL (3GN19IS037), VAISHNAVI SHARAD MORE (3GN19IS038) in partial full-filament of the requirements for the award B.E-in Information Science & Engineering by Visvesvaraya Technological University, Belagavi during academic year 2021-22. It is certified that the mini-project has been approved as it satisfies the academic requirements in respect of the mini project work prescribed for B.E .

Signature of Guide

Prof. SHILPA TARNALLE

Signature of HOD

Prof. RAMESH KUMAR PATIL

EXAMINER 1:

EXAMINER 2:

PRINCIPAL
Guru Nanak Dev Engg. College, Bidar

ABSTRACT

An old method of keeping records of dairy members using pen and paper is not reliable as finding old data can take a long time. The Dairy Management System provides dairy owners an easy way to organize the data of dairy members in one place through a web application. Through the dairy management system, the dairy owner can keep records of the individual's daily milk collection and the same will be credited to the user's account so that both the owner and the user can keep track of past records. Also, the dairy owner gets a few more options in the dashboard. Only the owner can verify the user's account after the user registers in the system. With this, the owner can keep track of daily total collection, total revenue, total expenses, collection between two dates. Both the user and the owner can receive receipts from their account for milk related contributions and collection related transactions respectively.

VISVESVARAYA TECHNOLOGICAL UNIVERSITY, BELAGAVI

GURU NANAK DEV ENGINEERING COLLEGE, BIDAR

ESSENCE OF WISDOM IS SERVICE OF HUMANITY

GURU NANAK DEV ENGINEERING COLLEGE

BIDAR • INDIA

DEPARTMENT OF INFORMATION SCIENCE & ENGINEERING

CERTIFICATE

This is to certify that the mini project work and titled " TRAIN RESERVATION SYSTEM JAVA MINI DBMS PROJECT " is a bonafide work carried out by VAISHNAVI (3GN19IS039), VAISHNAVI L (3GN19IS040), VAISHNAVI C (3GN19IS041) in partial full-filament of the requirements for the award B.E-in Information Science & Engineering by Visvesvaraya Technological University, Belgavi during academic year 2021-22. It is certified that the mini-project has been approved as it satisfies the academic requirements in respect of the mini project work prescribed for B.E .

23/03/2022

23/03/2022

Signature of Guide

Prof. SHILPA TARNALLE

Signature of HOD

Prof. RAMESH KUMAR PATIL

EXAMINER 1:

EXAMINER 2: Skoundi

PRINCIPAL

Guru Nanak Dev Engg. College, Bidar

ABSTRACT

The railway management system facilitates the passengers to enquire about the trains available on the basis of source and destination, booking and cancellation of tickets, enquire about the status of the booked ticket, etc. The aim of case study is to design and develop a database maintaining the records of different trains, train status, and passengers. The record of train includes its number, name, source, destination, and days on which it is available, whereas record of train status includes dates for which tickets can be booked, total number of seats available, and number of seats already booked.

PRINCIPAL
Nanak Dev Engg. College, Bidar

VISVESVARAYA TECHNOLOGICAL UNIVERSITY, BELAGAVI

GURU NANAK DEV ENGINEERING COLLEGE, BIDAR

DEPARTMENT OF INFORMATION SCIENCE & ENGINEERING

CERTIFICATE

This is to certify that the mini project work and titled " DISTANCE STUDIES ONLINE EDUCATION MANAGEMENT SYSTEM " is a bonafide work carried out by VISHAL J (3GN19IS042), YOGESH D (3GN19IS043), ZOHEB M K (3GN19IS044) in partial full-filament of the requirements for the award B.E-in Information Science & Engineering by Visvesvaraya Technological University, Belagavi during academic year 2021-22. It is certified that the mini-project has been approved as it satisfies the academic requirements in respect of the mini project work prescribed for B.E .

23/03/2022

Signature of Guide

Prof. SHILPA TARNALLE

23/03/2022

Signature of HOD

Prof. RAMESH KUMAR PATIL

EXAMINER 1:

EXAMINER 2:

PRINCIPAL
Guru Nanak Dev Engg. College, Bidar

ABSTRACT

The study investigated the relationship between Canvas learning management system, Google Classroom, Zoom for online teaching and quality of distance education. Purposive sampling technique was used to select 750 lecturers in 75 centers of Open University of Nigeria. Data was collected using Access Management and Quality of Distance Education Questionnaire. Pearson product moment correlation coefficient and linear regression analysis were used to analyze the data collected. The findings revealed that Canvas learning management system, Google Classroom and Zoom for online teaching were positive and significantly correlated with quality of distance education. It was recommended that lecturers should continue making use of canvas learning management system so as to helps students to plan the process of their learning. Also, lecturers should continue to adopt and implement the use of Google classroom to facilitate effective teaching and learning in order to provides learning opportunities by encouraging questions, exploration and outliers. Furthermore, lecturers should continue make use of zoom for online teaching so as to helps students to work in groups as well as helps students to collaborate both on the preparation and recording of the presentation through video conferencing in order to achieve quality of distance education in Nigeria

PRINCIPAL
Guru Nanak Dev Engg. College, Bidar

GURU NANAK DEV ENGINEERING COLLEGE, BIDAR

DEPARTMENT OF MBA

CERTIFICATE

This is to certify that **MR. ABHISHEK** bearing **USN 3GN20BA001** is a bonafide student of Master of Business Administration course of the Institute **(2020-2022)**, affiliated to Visvesvaraya Technological University, Belgaum. Project report on **"CUSTOMER SATISFACTION at AIRTEL IN PRINCE AGENCIES"** is prepared by him under the guidance of **Prof.HARSHAVARDHAN J MITRA**, in partial fulfillment of the requirements for the award of the degree of Master of Business Administration of Visvesvaraya Technological University, Belagavi Karnataka.

Prof. Harshavardhan J Mitra	**Prof. Jyoti Ainapur**	**Dr. Dhananjay D Muktedar**
(Internal Guide)	**Head of the Department**	PRINCIPAL
	Master of Business Administration	(Principal)
	G.N.D.Engg. College, BIDAR-585403	BIDAR
	(KARNATAKA)	

EXTERNAL VIVA VOCE

NAME OF THE EXAMINERS	SIGNATURE WITH DATE
1.	21/10/22
2.	

PRINCIPAL
Guru Nanak Dev Engg. College, Bidar

GSTIN No. 29ANZPC0691H1ZI || Sri ketaki Sangameshwar Prasanna ||

PRINCE AGENCIES

Authorised Distributor of Airtel Network

Airtel Distribution Singha Complex, Opp. Bhagat Singh Circle, Bidar - 585401 (K.S)

Ref. No. *Date* : 21/7/2022

TO WHOMSOEVER IT MAY CONCERN

This is to certify that **MR. ABHISHEK** having registration number **3GN20BA001** of **MBA 4th semester** of **GURU NANAK DEV ENGINEERING COLLEGE**, Department of MBA, has successfully completed his project work in our organization on the topic of "**Customer Satisfaction towards Airtel**", in **PRINCE AGENCIES** distributor Bidar, from 26/03/2022 to 7/05/2022.

We wish him good luck for his future endeavor.

Hence certified,

PRINCE AGENCIES
Airtel Distributor Singha Complex
Opp. Bhagat Singh Circle, BIDAR - 585 401
Cell : 88809 4442 / 81231 23120

For PRINCE AGENCIES

PRINCIPAL
Guru Nanak Dev Engg. College, Bidar

Executive Summary:

Airtel is the brand name of Bharti Airtel Limited, an international telecommunications services provider with headquarters in New Delhi. It runs operations in 18 nations in South Asia, Africa, and the Channel Islands. Depending on the operating nation, Airtel offers voice, fixed-line Internet, 2G, 3G, 4G, 4G+, and 5G mobile services.

OBJECTIVES OF THE STUDY

- To determine consumer satisfaction with AIRTEL.
- To assess prospective assumptions and customer loyalty.

SCOPE OF THE STUDY

- It helps to find out the important cellular service provide in Coimbatore city at current.
- It shows the various for selecting the particular cellular service.

LIMITATION OF THE STUDY

- Unavailability of time and some related funds indirectly distress the survey method.
- The area of operation was only limited to Bidar so it applicable only to that area.

FINDING:

- More customer is using Airtel network.
- Giving the best scheme customer services are fast

PRINCIPAL
Guru Nanak Dev Engg. College Bidar

GURU NANAK DEV ENGINEERING COLLEGE

BIDAR

DEPARTMENT OF MBA

CERTIFICATE

This is to certify that, **Mr. ABHISHEK** bearing **USN: 3GN20MBA002** is a Bonafide student of the Master of Business Administration course of the Institute (2020-2022), affiliated to Visvesvaraya Technological University, Belagavi. Project report on **"CONSUMER BUYING BEHAVIOUR AT CREAM BELL ICE CREAM"** is prepared by him under the guidance of **PROF. ARATI BIRADAR**, in partial fulfillment of the requirements for the award of the degree of Master of Business Administration of Visvesvaraya Technological University, Belagavi Karnataka.

Prof. Arati Biradar	**Prof. Jyoti Ainapur**	**Dr. Dhananjay D Muktedar**
(Internal Guide)	**Head of the Department**	**PRINCIPAL**
	Master of Business Administration G.N.D.Engg. College, BIDAR-585403 (KARNATAKA)	Guru Nanak Dev Engg. College BIDAR

EXTERNAL VIVA-VOCE

NAME OF THE EXAMINERS:	**SIGNATURE WITH DATE**
1. Dr. Bhasavaraj. Hiremath	31/10/22
2. Arati B	31/10/22

PRINCIPAL
Guru Nanak Dev Engg. College, Bidar

Scanned with OKEN Scanner

K K ENTERPRISES

SY NO 17/18, PLOT NO 73/94, BHANJARA LAYOUT, SHAHABAD ROAD, GULBARGA- 585105.

GSTIN – 29AADFF3674QIZP

Date: 10/06/2022

CERTIFICATE

This is to certify that **Mr. Abhishek** bearing **USN 3GN20BA002** student of **Visvesvaraya Technological University, Guru Nanak Dev Engg. College Bidar,** department of MBA has successfully completed the project titled, **"The Study On Consumer Buying Behavior Towards of Crema Bell Ice Cream"** at Kalaburagi with special reference to **K K Enterprises** under the external guidance of **Mr. Satish**sales manager, for the during Dated 16th April 2022 to 25th May 2022.

The project work was carried out as part of his academic study.

He took keen interest in the work assigned to him. Conduct and behavior was found good.

We wish him all success in his future Endeavor's.

For K. K. Enterprises

Proprietor

K K ENTERPRISES

PRINCIPAL

Guru Nanak Dev Engg. College, Bidar

Scanned with OKEN Scanner

EXECUTIVE SUMMARY

My review will analyse "A STUDY ON CONSUER BUYING BEHAVIOUR. OF CREAM BELL ICE CREAM" at K K Enterprises in Kalaburgi. The study of consumer buying behaviour. aim of the study is to increases our knowledge of buying behaviour of the consumers, and find out the how consumers are behave in buying at the time of retailers.

Analyse to reason for consumers dissatisfaction towards cream bell ice cream and also noticed their suggestion related to products and penetration of cream bell ice cream in kalaburgi region.

This project report provides a lot of information about buying behaviour of consumers towards cream bell and other companies as well as it also provides a detail knowledge about the consumer favorites towards different ice cream products and companies.

PRINCIPAL
Guru Nanak Dev Engg. College, Bidar

GURU NANAK DEV ENGINEERING COLLEGE BIDAR

DEPARTMENT OF MBA

CERTIFICATE

This is to certify that **Miss. AISHWARYA** bearing **USN:3GN20BA003** is a Bonafide student of Master of Business Administration course of the Institute (2020-2022), affiliated to Visvesvaraya Technological University, Belagavi. Project report on **Credit risk management at "Utkarsh Patina Souharda Sahakari Niyamit Bidar"** is prepared by her under the guidance of **PROF. HARSHAVARDHAN MITRA**, in partial fulfillment of the requirements for the award of the degree of Master of Business Administration of Visvesvaraya Technological University, Belagavi Karnataka.

Prof. HARSHAVARDHAN.M
(Internal Guide)

Prof. JYOTI AINAPUR
(HOD, MBA)
Head of the Department
Master of Busines Administration
G.N.D.Engg. College, BIDAR-585403
(KARNATAKA)

DR. DHANANJAY D MUKTEDAR
PRINCIPAL
(Principal)
Guru Nanak Dev Engg. College
BIDAR

EXTERNAL VIVA-VOCE

NAME OF THE EXAMINERS: SIGNATURE WITH DATE

1. Harshavardhan M 27/10/22

2. Dr. Bhaskar Kumar P 27/10/22

PRINCIPAL
Guru Nanak Dev Engg. College, Bidar

Regd. No. UNGIV/Regd. 4441/CR-2019-20

Cell: 861785595
886767001

UTKARSHA PATTIN SOUHARDA SAHAKARI NIYAMIT

Raghavendra Complex, Rang Mandir Road, BIDAR-585 401.

-(2021-22-

Date : 19-07-202

CERTIFICATE

This is to certify that Aishwarya bearing USN (3GN20BA003) Is a bonafide student of Master Of Business Administration in Finance Stream at GURU NANAK DEV ENGINEERING COLLEGE BIDAR-2022. Affiliated To Visvesvaraya Technological University Belgaum. Project report on "CREDIT RISK MANAGEMENT AT THE UTKARSH PATTINA SOUHARDA SAHAKARI NIYAMIT BIDAR" is Prepared by her under the guidance of Prof. DATTATRI KULKARNI, from 26-03-2022 to 07-05-2022 in partial fulfillment of the requirements for the award of the degree Master Of Business Administration of Visvesvaraya Technological University, Belgaum Karnataka.

Signature of Manager

ಮುಖ್ಯ ಕಾರ್ಯನಿರ್ವಾಹಕರು
ಉತ್ಕರ್ಷ ಪತ್ತಿನ ಸೌಹಾರ್ದ ಸಹಕಾರಿ ನಿ.
ಬೀದರ-585 401

PRINCIPAL
Guru Nanak Dev Engg. College, Bidar

EXECUTIVE SUMMARY

Finance has developed into a critical component of any corporate venture, without which no managerial tasks can be carried out. 1The element of management activity dealing with the planning and control of the firm's financial resources is referred to as financial management.

The UTKARSH PATTINA SOUHARDA SAHAKARI NIYAMIT was established under the co-operative society act bearing registration number under the RBI UBD/KAN/1181 P/95, 27.11.1995 from the Registrar of Co-operative societies in Karnataka for conducting the "Banking Business" with an intension to provide loan and give high interest on deposit to the customers and members.

This study is mainly focused on "Credit Risk Management at The UTKARSH PATTINA SOUHARDA SAHAKARI NIYAMIT . Bangalore. The research study helps to find out the profitability, financial strengths and weakness of The UTKARSH PATTINA SOUHARDA SAHAKARI NIYAMIT.

PRINCIPAL
Guru Nanak Dev Engg. College, Bidar

GURU NANAK DEV ENGINEERING COLLEGE, BIDAR

DEPARTMENT OF MBA

This is to certify that **Miss. AMBUJA** being USN: **3GN20BA004** is a bonafide student of **Master of Business Administration** course of the institute **(2021-2022), affiliated to Visvesvaraya Technological University, Belagavi.** Project report on **"CUSTOMER SATISFACTION"** at **"PANDE MOTORS BIDAR"** is prepared by her the guidance **PROF. HARSHAVARDHAN J MITRA,** in partial fulfillment of the requirements for the award of the degree of master of Master of Business Administrations of Visvesvaraya Technological University, Belagavi.

Prof. Harshavardhan J Mitra
(Internal guide)

Prof. Jyoti Ainapur
(HOD)
Head of the Department
Master of Business Administration
G.N.D.Engg. College, BIDAR-585403
(KARNATAKA)

Dr. Dhananjay D Muktedar
(Principal)
PRINCIPAL
Guru Nanak Dev Engg.
BIDAR

EXTERNAL VIVA VICE

Name of Examiners:

1. Harshavardhan
2.

Signature with date

21/10/22

PRINCIPAL
Guru Nanak Dev Engg. College, Bidar

PANDE MOTORS

Authorised Dealers : **Vespa - Aprilia**

Vespa apri

Date: 09/05/22

TO WHOMSOEVER IT MAY CONCERN

This is to certify that **Miss. AMBUJA** having registration number**3GN20BA004 of MBA** 4th Semester of **GURU NANAK DEV ENGINEERING COLLEGE**, Department of MBA, has successfully completed his project work in our organization on the topic of **"CUSTOMER SATISFACTION"**, in **PANDE MOTORS** with relevant details guided by our showroom dealer Bidar, form 26/03/2022 to7/05/2022.

Her performance and behavior during the project work found good,we would like to wish her all the best to her future.

Hence certified,

For PANDE MOTORS

M/s PANDE MOTORS

17-4-123/1 & 2 Ground Floor, Gumpa Road, BIDAR - 585401
Ph: 08482-234888, Cell : 6363773309

CamScanner

PRINCIPAL
Guru Nanak Dev Engg. College, Bidar

EXECUTIVE SUMMARY:

The word automobile arises, via the French word automobile. That means vehicle that moves itself. Automotive manufacturing is a well-known enterprise or association they goods a wide range of products and they difficult in planning, emerging, manufacturing, marketing, and dealing of motor vehicles. Auto motive manufacturing is one of the wildest rising industries in our nation.

Objective of the study:

- To identify customer satisfaction towards Vespa Scooter
- To understanding the Vespa Scooter road grip is excellent

Limitation of study:

- Shortage of time and some related resources indirectly affect the survey process.
- The area of operation was only limited to Bidar so it applicable only to that area.

Findings:

- The first drive comfort of Vespa scooter is good.
- The Vespa scooter performance and pickup is satisfied.
- Vespa scooter is suitable for stylish.

Suggestions:

- The dealer is requiring providing discount on cash purchase.
- The customers booking the Vespa scooter and that should be delivering on time.

PRINCIPAL
Guru Nanak Dev Engg. College, Bidar

GURU NANAK DEV ENGINEERING COLLEGE, BIDAR

DEPARTMENT OF MBA

CERTIFICATE

This is to certify that **Miss. ANKITA** bearing **USN: 3GN20BA006** is a Bonafide student of **Master of Business Administration** course of the Institute **(2020-2022)**, affiliated to Visvesvaraya Technological University, Belagavi. Project report on **"TRAINING AND DEVELOPMENT" at "AADYA SHREE SOUHARDA CREDIT CO-OPERATRIVE LTD BIDAR"** is prepared by her under the guidance of **PROF. HARSHAVADHAN J MITRA**, in partial fulfillment of the requirements for the award of the degree of Master of Business Administration of Visvesvaraya Technological University, Belagavi Karnataka.

Prof. Harshavardhan J Mitra
(Internal guide)

Prof. Jyoti Ainapur
Head of the Department (HOD)
Master of Busines Administration
G.N.D.Engg. College, BIDAR-585403
(KARNATAKA)

Dr. Dhananjay D Muktedar
PRINCIPAL
(Principal)
Guru Nanak Dev Engg. College
BIDAR

EXTERNAL VIVA-VOCE

NAME OF THE EXAMINERS:	**SIGNATURE WITH DATE**
1. Harshavardhan . M	10/11/2022
2. Dr. Ashwin	10/11/22

PRINCIPAL
Guru Nanak Dev Engg. College, Bidar

ನೋಂದಣಿ ಸಂಖ್ಯೆ: ಸಸಿಬಿ-1/ಎ-1/ನೋಂದಣಿ/ಬೀದರ್-19/4139/2019-2020

ಆದ್ಯ ಶ್ರೀ ಸೌಹಾರ್ದ ಕ್ರೆಡಿಟ್ ಕೋ-ಆಪರೇಟಿವ್ ನಿ., ಬೀದರ

AADYA SHREE SOUHARDA CREDIT CO-OPERATIVE LTD.

 # 18-3-19, Chidri Road, Hanuman Nagar, BIDAR.

ದಿನಾಂಕ: 29/03/2022

ಉಲ್ಲೇಖ:

TO WHOMSOEVER IT MAY CONCERN

This is to certify that **Miss. ANKITA** having registration number 3GN20BA006 of MBA 4th semester of **GURU NANAK DEV ENGINEERING COLLEGE**, Department of MBA, has successfully completed her project work in our organization on the topic of "**TRAINING AND DEVELOPMENT**", in **AADYA SHREE SOUHARDA CREDIT CO-OPERATIVE LTD BIDAR** with relevant details guided by our bank CEO Bidar, from 26/03/2022 to 7/05/2022.

Her performance ad behaviour during the project work found good, we would like to wish her all the best to her future.

Hence certified,

ಅಧ್ಯಕ್ಷರು
ಆದ್ಯಶ್ರೀ ಸೌಹಾರ್ದ ಕ್ರೆಡಿಟ್
ಕೋ ಆಪರೇಟಿವ್ ನಿ. ಬೀದರ.

PRINCIPAL
Guru Nanak Dev Engg. College, Bidar

EXECUTIVE SUMMARY:

Since from quite a while back these co-usable social orders were begun, these social orders proclamation judge by the part given to them. Development designed inside the west however they have assessed Asian country sometimes wherever else on the planet. It has worked on its business in the metropolitan region now days and late year for the most part because of speedy ascent in the quantity of essential helpful society.

Objective of the study:

- To study the training methods and duration
- To know the employee satisfaction during the training.

Limitation of the study:

- Time constraint.
- Sometimes the respondent does not want to disclose some relevant information.

Findings:

- Each and every employee is getting training in this organization.
- The training program is helpful in employee and employer relationship.

Suggestions:

- The training sessions should be on time.
- All doubts should be cleared.

PRINCIPAL
Guru Nanak Dev Engg. College, Bidar

GURU NANAK DEV ENGINEERING COLLEGE, BIDAR

DEPARTMENT OF MBA

CERTIFICATE

This is to certify that **Miss. ANURADHA** bearing **USN: 3GN20MBA007** is a bonafide student of **Master of Business Administration** course of the Institute (2021-2022), affiliated to Visvesvaraya Technological University, Belagavi. Project report on **TRAINING AND DEVELPOMENT** at **"KARANJA RUBBER PVT.LTD"** is prepared by her under the guidance of **PROF.HARSHAVARDHAN MITRA**, in partial fulfillment of the requirements for the award of the degree of Master of Business Administration of Visvesvaraya Technological University, Belagavi Karnataka.

Prof.Harshavardhan Mitra
(Internal guide)

Prof.Jyoti Ainapur
Head of (HOD) Department
Master of Busines Administration
G.N.D.Engg. College, BIDAR-585403
(KARNATAKA)

Dr.Dhanajay D Muktedar
(Principal)
PRINCIPAL
Guru Nanak Dev Engg. College
BIDAR

EXTERNAL VIVA-VOCE

NAME OF THE EXAMINERS:

SIGNATURE WITH DATE

1. Harshavardhan. M 10/11/2022
2. Dr. Ashwin Kumar 10/11/22

PRINCIPAL
Guru Nanak Dev Engg. College, Bidar

Karanja Industries Private Limited
(Rubber Division) ISO - 9001 : 2015
AKKA MAHADEVI COLONY, BIDAR - 585 401.
MANUFACTURER OF RECLAIMED RUBBER
Cin-U25199KA1992PTC012992
ne : 08482-228147, 228902 Email : karanjabidar@yahoo.com Website : www.karanjaindustries.com

f. No. Date : _____

KIPL/CERT/22-23/116 11.04.2022

TO WHOMSOEVER IT MAY CONCERN

This is to certify that **Miss.Anuradha USN: 3GN20BA007** a student of MBA IVth Sem from **"Guru Nanak Dev Engineering College Bidar,** successfully completed her Internship on **"Training & Development" in Karanja Industries Pvt. Ltd. Rubber Division, at Kolhar Industrial Area, Bidar, from 26-03-2022 to 07-05-2022.**

Hence certified.

For KARANJA INDUSTRIES PVT LTD.

MANAGING DIRECTOR.

Factory : Plot No. 1 Kolhar Industrial Area, Kolhar (K) BIDAR - 585 403
Phone : 08482-232219

PRINCIPAL
Guru Nanak Dev Engg. College, Bidar

CamScanner

EXECUTIVE SUMMARY

Each and every organization aspiration to comprehend their goal and objective by making employees engaged with worker

The project report executive and presented relies on HR one amongst imported function Employees Training and Development.

In this project I'm visiting provides a brief description on the training and development employees at Karanja Industries Private Limited

The worker his to way preparation at the elemental level the worker keeping attracted out fitting with the correct condition strength the labor a development productivity and achieve the upper.

Karanja rubber's journey so for has been stuffed with challenges since its founding in 2007 By It's the founder administration director Mr.H.S Biradar, Karanja.

OBJECTIVES OF THE STUDY

Identifying and assessing the abilities of staff required to carry out his/her job (or) operate a machine.

- To learn the different training programmes planned by the corporation.
- To know the fulfillment levels of the employees.

LIMITATIONS OF THE STUDY

- Learning is order to the questions included within the questionnaire.
- Limited sample size.
- Questionnaire was filled only by selected persons with in the karanja rubber pvt ltd.

PRINCIPAL
Guru Nanak Dev Engg. College, Bidar

GURU NANAK DEV ENGINERRING COLLEGE, BIDAR

DEPARTMENT OF MBA

CERTIFICATE

This is to certify that **MR. BASAVA** bearing **USN: 3GN20BA008** is a Bonafide student of Master of Business Administration course of the institute (2020-2022), affiliated to Visvesvaraya Technological University, Belagavi. Project report on **"CUSTOMER SATISFACTION"** at **"ROYAL ENFIELD SHOWROOM BIDAR"** is prepared by him under guidance of **PROF. ARATI BIRADAR** in partial fulfillment of the requirements for the award of the degree of Master of Business Administration of Visvesvaraya Technological University, Belagavi Karnataka.

Prof. Arati Biradar	**Prof. Jyoti Ainapur**	**Dr. Dhananjay D Muktedar**
(Internal Guide)	Head of the Department Master of Business Administration (HOD) G.N.D.Engg.College, BIDAR-585403 (KARNATAKA)	PRINCIPAL Guru Nanak Dev Engg. College (Principal) BIDAR

EXTERNAL VIVA-VOCE

NAME OF THE EXAMINERS	**SIGNATURE WITH DATE**
1 Dr. Bharssappa. H	31/10/22.
2 Arati B	31/10/22

PRINCIPAL
Guru Nanak Dev Engg. College, Bidar

ROYAL ENFIELD

avani Motors

GSTIN: 29BEJPP6159P3ZD

p No.1 & 2, Beside Vasu Hopital,
B College Road, Bidar -585 403

nager
634567

Sales 9035478342
Service 9019142142

. No.

Date: 10/06/2022

-:: Certificate ::-

This is to certify that **Mr. BASAVA USN (3GN20BA008), MBA 4TH** Semester a student of **Guru Nanak Dev Engineering College, Bidar – 585403,** has successfully completed his internship on **"CUSTOMER SATISFACTION"** in **BHAVANI MOTORS (ROYAL ENFIELD) BIDAR,** from **26 -03-2022 to 07-05-2022** during the period he has taken good initiative and interest in completing the study.

He has obtained necessary information and completed his industrial training.

We wish all the best for his future end over.

BHAVANI MOTORS BIDAR

MANAGING DIRECTOR

To,

Mr. BASAVA USN (3GN20BA008)
Guru Nanak Dev Engineering College, Bidar

w.royalenfield.com / email : bhavanimotorsbidar@gmail.com

PRINCIPAL
Guru Nanak Dev Engg. College, Bidar

CamScanner

EXECTIVE SUMMARY:-

The study of customer satisfaction on the servicing in Royal Enfield at Bhavani Motors. In this project report the data of primary has collected from personal meeting with the help of consumers Royal Enfield users and the information collected by the customers from the scheduled questionnaires. And the sample size of the respondents is 50 and the data analysis and interpretation were prepared in the form of secondary data these data collected from company website and books.

OBJECTIVES OF THE STUDY:

The various objective of the study are as follows:

- To determine the customers satisfaction regarding Royal Enfield bikes
- To comprehend the justifications for buying Royal Enfield motorcycles.
- To gain knowledge of the experience related to various aspects following a purchase (service, bike performance, mileage etc.)
- To study which model of Royal Enfield Motorcycle preferring by customer
- To study Opinion of customer towards price of Royal Enfield

SCOPE OF THE STUDY:-

- To study customer opinion regarding behaviour of the staff during services.
- To study customer perception towards BHAVANI Motors.
- Customer's satisfaction is important output that means work of company performance.

PRINCIPAL
Guru Nanak Dev Engg. College, Bidar

GURU NANAK DEV ENGINEERING COLLEGE, BIDAR

DEPARTMENT OF MBA

CERTIFICATE

This is to certify that **Miss. BHAGYASHREE** being **USN: 3GN20BA009** is a Bonafide Student of Master of Business Administration course of the Institute 2020-22, affiliated to Visvesvaraya Technological University, Belagavi. Project report on **" Employee Training And Development in Igeeks Technologies Benglore"** is prepared by her under the guidance of **Prof. Kalyanrao K** in partial fulfilment of the requirements for the award of the degree Master of Business Administration of Visvesvaraya Technological University, Belagavi Karnataka

Prof. Kalyanrao K
(Internal Guide)

Prof. Jyoti Ainapur
Head of the Department
(HOD MBA)
Master of Busines Administration
G.N.D.Engg. College, BIDAR-585403
(KARNATAKA)

Dr. Dhananjay D Muktedar
PRINCIPAL
(PRINCIPAL)
Guru Nanak Dev Engg. College
BIDAR

EXTERNAL VIVA-VOICE

Name of the Examiner:	**Singature with Date**
1 Dr. Bhaskappa. Hasalmma	
2 Kalyanrao K	

PRINCIPAL
Guru Nanak Dev Engg. College, Bidar

iGeeks
Bridging Technology

CERTIFICATE OF COMPLETION

THIS CERTIFICATE OF COMPLETION IS AWARDED TO

MISS BHAGYASHREE

FOR HAVING SUCCESSFULLY COMPLETED THE PROJECT TITLED

"EMPLOYEE TRAINING AND DEVELOPMENT"

GIVEN AT BANGALORE THIS 25TH JUNE 2022

IGEEKS TECHNOLOGIES
No.19, MN Complex, 2nd Floor,
2nd Cross, Sampige Road, Malleswaram,
Bangalore-560003
Again, congratulations and we look forward to working with you.
Yours sincerely,
For IGEEKS TECHNOLOGIES

Y Narayanarao

Mr. Narayana Rao Yadla
Director – Projects.

+91-7019-28-0372

info@igeekstechnologies.com

No: 19, MN Complex, 2nd Cross, Sampige
Main Road, Malleswaram Bangalore- 560003

www.igeekstechnologies.com

PRINCIPAL
Guru Nanak Dev Engg. College, Bidar

EXECUTIVE SUMMARY

The purpose of this research was to evaluate the efficiency of Global Quest Technologies training and development programme. The research replied mostly on feedback from employees on the training programme and the impact it had on their performance. this research will assist the organisation better understand the impact of a training programme on employee performance, which is essential if the organisation wants to increases its performance via the grout of its workforce. Understanding the training program's important elements and gaining insight into how successful training sessions are will be gained through this research.

PRINCIPAL
Guru Nanak Dev Engg. College, Bidar

GURU NANAK DEV ENGINEERING COLLEGE, BIDAR

DEPARTMENT OF MBA

CERTIFICATE

This is to certify that **Mr. BUDDESH** bearing **USN: 3GN20BA010** is a Bonafide student of **Master of Business Administration** course of the Institute **(2020-2022)**, affiliated to Visvesvaraya Technological University, Belagavi. Project report on **"TRAINING AND DEVELOPMENT"** at **"REYANSH ENTERPRISES BIDAR"** is prepared by him under the guidance of **PROF. JYOTI AINAPUR**, in partial fulfillment of the requirements for the award of the degree of Master of Business Administration of Visvesvaraya Technological University, Belagavi Karnataka.

Prof. Jyoti Ainapur
(Internal guide)

Prof. Jyoti Ainapur
Head of the Department
(HOD)
Master of Busines Administration
G.N.D.Engg. College, BIDAR-585403
(KARNATAKA)

Dr. Dhananjay D Muktedar
PRINCIPAL
(Principal)
Guru Nanak Dev Engg. College
BIDAR

EXTERNAL VIVA-VOCE

NAME OF THE EXAMINERS: SIGNATURE WITH DATE

1. Guru Nanak P
2. Prof Jyoti A

PRINCIPAL
Guru Nanak Dev Engg. College, Bidar

OKINAWA
Power the Change

Reyansh Enterprises

GSTIN -29EGRPP5841P5
Contact No – 7620804398
Office Address: Opp. BVB College, Near BasavaMuktiMandir, Bidar 585403
Phone No.: 7620804398 E-mail: kiranrangdal@gmail.com
Website: https://okinawascooters.com/

Date: 15/06/2022

TO WHOM IT MAY CONCERN

This is to certify that MR.BUDDESH USN(3GN20BA010), a student of MBA HR Branch Department of GURU NANAK DEV Engineering college MAILOOR, affiliated to Visvesvaraya Technological University Belagavi, has successfully completed six weeks (From 26TH MARCH , 2022 to 07TH MAY , 2022) Training and development a project work at this Okinawa Scooters Bidar, Reyansh Enterprises under the guidance of Mrs. KavitaTandle. During the period of him internship programme with us he was found punctual, hardworking and inquisitive.

We wish him every success in life.

ForOkinawa Scooters Bidar,
Reyansh Enterprises,

REYANSH ENTERPRISES BIDAR

Corporate Office

Unit No. 651-654, 6th Floor, JMD Megapolis, Sector 48, Sohna Road, Gurgaon (122018), Haryana, India.

PRINCIPAL
Guru Nanak Dev Engg. College, Bidar

EXECUTIVE SUMMARY:

The Okinawa Electric Power Enterprise, Combined, OEPC or Okiden for short, is an electrical adequacy with unlimited functional area of Okinawa Prefecture, Japan. It is the most minimal by electrical energy deals among Japan's ten public power utilities, for sure, its electrical energy deals is practically 1/40 of that of The Tokyo Electric Power Company, however it is the biggest by pay among partnerships settled in Okinawa.

Objective of the study:

- To know the on-the-job training.
- To know the barriers to training and development.

Limitation of the study:

- Respondents may hesitate
- Respondent bias

Findings:

- The effective training of more respondents is excellent.
- The employees are said ideal of training immediately are after the training.

Suggestions:

- The training session will be on time.
- All doubts should be clearing.

PRINCIPAL
Guru Nanak Dev Engg. College, Bidar

GURU NANAK DEV ENGINEERING COLLEGE, BIDAR

DEPARTMENT OF MBA

CERTIFICATE

This is to certify that **Mr. CHANNAVEER** bearing **USN: 3GN20BA012** is a bonafide student of **Master of Business Administration** course of the Institute **(2020-2022)**, affiliated to Visvesvaraya Technological University, Belagavi. Project report on **"CUSTOMER SATISFACTION ABOUT COCA COLA" in "Mahalaxmi Agencies Bidar"** is prepared by him under the guidance of **PROF. ARATI BIRADAR**, in partial fulfillment of the requirements for the award of the degree of Master of Business Administration of Visvesvaraya Technological University, Belagavi Karnataka.

Prof. Arati Biradar	Prof. Jyoti Ainapur	Dr. Dhananjay D Muktedar
(Internal Guide)	Head of the Department (HOD) Master of Business Administration G.N.D.Engg. College, BIDAR-585403 (KARNATAKA)	PRINCIPAL (Principal) Guru Nanak Dev Engg. College BIDAR

EXTERNAL VIVA VOCE

NAME OF THE EXAMINERS	SIGNATURE WITH DATE
1. Dr. Bhagappa. Hasulmani	31/10/22
2. Arati	31/10/22

PRINCIPAL
Guru Nanak Dev Engg. College, Bidar

GSTIN No. 29AFGPB2209F1ZX

MAHALAXMI AGENCIES

Authorized Distributor of Coca Cola Products

Shop No. 16 17 18, Raghavendra Temple Complex, Ranganathi Road, Bidar-585401

DATE: 14/06/2022

TO WHOMSOEVER IT MAY CONCERN

This is to certify that **Mr. CHANNAVEER** having registration number **3GN20BA012** of **MBA 4th sem student** of **GURU NANAK DEV ENGINEERING COLLEGE**, Department of MBA, has successfully completed his project work in our organization on the topic of "**Customer Satisfaction**" in **MAHALAXMI AGENCIES Coca Cola** distributor Bidar, from 26/03/2022 to 7/05/2022.

His performance and behaviour during the project work found good, we would like to wish him all the best to his future.

Hence certified,

For : M/s. Mahalaxmi Agencies

Proprietor

For MAHALAXMI AGENCIES

PRINCIPAL

Guru Nanak Dev Engg. College, Bidar

Executive Summary

In 1950, The Coca-Cola Company established operations in India. However, they stopped operating there in 1977 in protest of laws and restrictions passed by the Indian government that limited the dilution of foreign businesses' shares. They made the decision to re-enter the market on October 24, 1993, and have remained a dominant force ever since.

Due to its solid financial position and well-known brand image, Coca-Cola, the most widely consumed soda beverage in the world, will be readily accepted virtually anywhere. As a result, Coca-attention Cola's is on providing for every market segment, everywhere.

PRINCIPAL
Guru Nanak Dev Engg. College, Bidar

GURU NANAK DEV ENGINEERING COLLEGE, BIDAR

DEPARTMENT OF MBA

CERTIFICATE

This is to certify that **Mr. DATTA** bearing **USN: 3GN20BA013** is a bonafide student of Master of Business Administration course of the Institute 2020-2022, affiliated to Visvesvaraya Technological University, Belagavi. Project report on **"CUSTOMER SATISFACTION OF SWARAJ TRACTOS" at MANJUNATH MARKETING SWARAJ** is prepared by him under the guidance of **PROF. JYOTI AINAPUR**, in partial fulfillment of the requirements for the award of the degree of Master of Business Administration of Visvesvaraya Technological University, Belagavi Karnataka.

Prof. Jyoti Ainapur
(Internal Guide)

Prof. Jyoti Ainapur
Head of the Department
(HOD)
Master of Busines Administration
G.N.D.Engg. College, BIDAR-585403
(KARNATAKA)

DR. Dhananjay D Muktedar
PRINCIPAL
(Principal)
Guru Nanak Dev Engg. College
BIDAR

EXTERNAL VIVA-VOCE

NAME OF THE EXAMINERS: **SIGNATURE WITH DATE**

1. Dr. Bhaveppa. Hiremath — 22/11/2022
2. Prof. Jyoti A

Head of the Department
Master of Busines Administration
G.N.D.Engg. College, BIDAR-585403
(KARNATAKA)

PRINCIPAL
Guru Nanak Dev Engg. College, Bidar

ಉತ್ಪಾದನೆ ರಾಜ್
ನನ್ ಸ್ವರಾಜ್ SWARAJ

MANJUNATH MARKETING

SWARAJ TRACTORS BIDAR

9449999916, 9449133555
mmbidarswaraj@gmail.com
GST No. 29AGNPG6344A1ZH
Shop No. 5,6 & 7, Sy.No. 22/2, Sapna Apartment, Gumpa Road, Bidar-585403

DATE: 14/07/2022

TO WHOMSOEVER IT MAY CONCERN

This is to certify that **MR. Datta USN: 3GN20BA013 a student of MBA 4th Sem from "Guru Nanak Dev Engineering college Bidar,** successfully completed his internship on**"Customer Satisfaction"in Manjunath marketing Swaraj tractor Showroom Bidar, from : 26-03-2022 to 07-05-2022.**

His performance and behaviour during the project work found good, we would like to wish him all the best to his future.

Hence certified,

For MANJUNATH MARKETING

For Manjunath Marketing

Manager

MANAGER

Authorised Dealer : Swaraj Tractors Sales, Service & Spares

PRINCIPAL
Guru Nanak Dev Engg. College, Bidar

EXECUTIVE SUMMARY

The swaraj tractors company was recognized in 1974, today swaraj is a most speedily growing company, India is mostly agriculture(forming) country, most of the farmers face problems regarding their work so the technology has completely changed the farmers working patterns.

Executive index is an essential that every MBA carrier out the project report study and detail analysis of an organization study will help student to have a clear knowledge of what is an group and what are the major factors.

To know the marketing strong point of the swaraj company this study carried. This can be evaluated with different marketing techniques and methods. In that I have choose CUSTOMER SATISFACTION.

The task report title CUSTOMER SATISFACTION has been rigorous in Bidar ath marketing. The key 'objective of the study was to know satisfaction level of customer'. Customer satisfaction plays an essential role in motivating the showroom executives and to identify about customers satisfaction level best. "The primary data collected by means of questionnaire." And "The secondary data was collected from the company web site and from records of the company."

THE STUDY OF OBJETIES: -

- To know the after sales service provided by swaraj.
- To know what are after the sales service in swaraj tractors.

THE SCOPE OF THE STUDY: -

Present analysis of **customer satisfaction** to know the satisfaction levels of the swaraj tractors and company makes changes in the product.

Limitations of study

- Time constraints.
- The study is conducted by meeting the customers
- This study is conducted in BIDAR.

PRINCIPAL
Guru Nanak Dev Engg. College, Bidar

GURU NANAK DEV ENGINEERIN COLLEGE
BIDAR

DEPARTMENT OF MBA

CERTIFICATE

This is to certify that MR. DINESH bearing USN 3GN20BA014 is a bonafide Student of Master of Business Administration course of the Institute (2020-2022), affiliated to Visvesvaraya Technological University, Belagavi. Project report on "CUSTOMER SATISFACTION" about 'TVS XL' in VANSH TVS MOTORS Bidar is prepared by him under the guidance of Prof. ARATI BIRADAR, in partial fulfillment of the requirements for the award of the degree of Master of Business Administration of Visvesvaraya Technological University, Belagavi Karnataka.

Prof. Arati Biradar
Internal Guide

Prof. Jyoti Ainapur
Head of the Department
Master of Busines Administration
G.N.D.Engg. College, BIDAR-585403
(KARNATAKA)

Dr. Dhananjay D Muktedar
PRINCIPAL
Principal
Guru Nanak Dev Engg. College
BIDAR

EXTERNAL VIVA VOCE

Name of the Examiners

Signature with Date

1. Arati
2. Dr MAMTA
02/NOV/22

2/11/22

PRINCIPAL
Guru Nanak Dev Engg. College, Bidar

TVS

VANSH TVS
19-4-114
Shivnagar Udgir Road
BIDAR - 585 401
Karnataka India
Ph. 08482 226000

Date 19/07/2022

TO WHOMSOEVER IT MAY CONCERN

This is to certify that MR.DINESH USN No.3GN20BA014 a student of MBA IV Semester Guru Nanak Dev Engineering College Bidar successfully completed his project report on Customer Satisfaction about TVS XL – VANSH TVS MOTORS Bidar from 26/03/2022 to 07/05/2022.

His performance and behavior during the project work found good. We would like to wish him all the best for his future

For VANSH TVS MOTORS BIDAR

PRINCIPAL
Guru Nanak Dev Engg. College, Bidar

EXECUTIVE SUMMARY

Whenever T.V. Sundaram Iyenger was kicked the container in 1955, after his kids took the association to lead with different in the vehicle fragment. Counting, protection, bikes, three wheelers, tyrosine parts, lodging, flight, co ordinations, etc. The bike business has been comes India since 1955. It incorporates three areas.

Bicycles

Mopeds

Cruiser

OBJECTIVE

1) To study the customer satisfaction towards excel heavy duty bike, Vanshtvs motor cycle.

2) To know what factor influence on customer while purchasing a bike.

3) To study customer satisfaction towards mileage of TVS two-wheelers.

4) To study customer opinion about price of TVS.

NEED FOR THE STUDY

1) Customer satisfaction should be of great concern in all organization.

2) Customer satisfaction is one way in which organization gets established and gets recogniti among the public.

3) The study will help in finding out where the company lacks benefits and how can it impro and if also help to understand the satisfaction of customer at various level.

PRINCIPAL
Guru Nanak Dev Engg. College, Bidar

GURU NANAK DEV ENGINEERING COLLEGE, BIDAR

DEPARTMENT OF MBA

CERTIFICATE

This is to certify that Mr. EBENEZER EMMANUEL bearing USN: 3GN20BA016 is a bonafide student of Master of Business Administration course of the Institute (2020-2022), affiliated to Visvesvaraya Technological University, Belagavi.Project report on "CUSTOMER SATISFACTION ABOUT SUZUKI ACCESS 125" in "KESHAV SUZUKI BIDAR" is prepared by him under the guidance of PROF. JYOTI AINAPUR, in partial fulfillment of the requirements for the award of the degree of Master of Business Administration of Visvesvaraya Technological University, Belagavi Karnataka.

Prof. Jyoti Ainapur	Prof. Jyoti Ainapur	Dr. Dhananjay D Muktedar
(Internal Guide)	Head (HOD)	PRINCIPAL

Head of the Department
Master of Busines Administration
G.N.D.Engg. College, BIDAR-585 403
(KARNATAKA)

Guru Nanak Dev Engg. C
BIDAR

EXTERNAL VIVA VOCE

NAME OF THE EXAMINERS	SIGNATURE WITH DATE
1. Dr. Bhassappa. Hasalamma	22/11/22
2. Prof. Jyoti A	

Head of the Department
Master of Busines Administration
G.N.D.Engg. College, BIDAR-585403
(KARNATAKA)

PRINCIPAL
Guru Nanak Dev Engg. College, Bidar

SUZUKI

KESHAV SUZUKI

DATE : – 19-07-2022

WHOM TO SOEVER IT MAY CONCERN

THIS IS TO CERTIFY THAT MR. EBENEZER EMMANUEL USN NO 3GN20BA016 A STUDENT OF MBA 4TH SEMESTER GURU NANAK DEV ENGINEERING COLLEGE BIDAR SUCCESSFULLY COMPLETED HIS PROJECT REPORT ON CUSTOMER SATISFACTION ABOUT SUZUKI ACCESS 125 KESHAV SUZUKI BIDAR FROM 26/03/2022 TO 07/05/2022.

HIS PERFORMANCE AND BEHAVIOR DURING THE PROJECT WORK FOUND GOOD.

WE WOULD LIKE TO WISH HIM ALL THE BEST FOR HIS FUTURE

For: Keshav kanji Motors Pvt. Ltd.,

Manager

19/7/22

KESHAV KANJI MOTORS PRIVATE LIMITED

Suncentre, Manhalli Road Kumbarwada Cross, BIDAR - 585 403. (K.S.)

PRINCIPAL

Guru Nanak Dev Engg. College, Bidar

Executive Summary

The Suzuki Company was established by Michio Suzuki in 1909 in Hamamatsu, Japan. The company experiments with a number of intriguing tiny car prototypes throughout the year 1937 in an effort to diversify its business, but none of them were put into production because the Japanese government declared civilian automobiles to be Non Essential during World War II

PRINCIPAL
Guru Nanak Dev Engg. College, Bidar

GURU NANAK DEV ENGINEERING COLLEGE, BIDAR
DEPARTMENT OF MBA

CERTIFICATE

This is to certify that **Mr.HARISHA** bearing **USN: 3GN20BA018** is a Bonafide student of Master of Business Administration course of the Institute (2020-2022), affiliated to Visvesvaraya Technological University, Belagavi. Project report on **"CONSUMER BUYING BEHAVIOUR" AT "KESHAV ENTERPRISES BIDAR"** is prepared by her under the guidance of **PROF.KALYANRAO**, in partial fulfillment of the requirements for the award of the degree of Master of Business Administration of Visvesvaraya Technological University, Belagavi Karnataka.

Prof. KALYANRAO	**Prof. JYOTI AINAPUR**	**Dr. Dhananjay D. Muktedar**
(Internal Guide)	**(HOD MBA)**	**PRINCIPAL** (Principal) Guru Nanak Dev Engg. College BIDAR

EXTERNAL VIVA-VOCE

Name of the Examiners: **Signature with Date**

Anne gath. N. K
GEC, Bidar

Kalyanrao K.

9/11/22

9/11/22

PRINCIPAL
Guru Nanak Dev Engg. College, Bidar

JOHN DEERE

KESHAV ENTERPRISES
B.V.B. College Road, BIDAR-585 403. (K.S)
Tele : 08482-220085, 220922
Email : keshavmotors1@gmail.com
GSTIN : 29AJTPK9080A2ZS

CERTIFICATE

This is to certify that Mr. HARISHA having registration number 3GN20BA018 of MBA 4th student of GURU NANAK DEV ENGINEERING COLLEGE, Department of MBA, has successfully completed his project work in our organization on the topic of **"Customer buying behavior towards John Deere Tractor"**, with relevant details guided by our sales team, form 26/03/2022 to 7/05/2022.

We wish him good luck for his future endeavour.

Sales Manager

(Shivanand)

JOHN DEERE TRACTOR

Authorized Dealer

(Keshav Enterprises)

Bidar-585401

Authorised Dealer for John Deere India Private Limited

TRACTORS | PARTS | SERVICE

PRINCIPAL
Guru Nanak Dev Engg. College, Bidar

EXECUTIVE SUMMARY

India continues to have an encouraging industrial activity and the corresponding healthy demand from customers. Tractors' requirements are expected to grow substantially agricultural country. Greater productivity and great performance are the two main contributions in the mechanization of any country. Thus, the tractor plays an important role as an integral part of increasing agricultural productivity.

PRINCIPAL
Guru Nanak Dev Engg. College, Bidar

GURU NANAK DEV ENGINEERING COLLEGE

BIDAR

DEPARTMENT OF MBA

CERTIFICATE

This is to certify that **Javeria Meher USN 3GN20BA019** is a bonafide student of Master of Business Administration course of the Institute 2020-22, affiliated to **Visvesvaraya Technological University, Belagavi**. Project report on "Employee Engagement & Motivation in Sai Life Science Pvt Ltd" is prepared by her under the guidance of **Prof. Harshvardhan M**, in partial fulfillment of the requirements for the award of the degree of Master of Business Administration of Visvesvaraya Technological University, Belagavi Karnataka.

Prof. Harshvardhan M
Internal Guide

Prof. Jyoti Ainapur
Head of the Department
HOD
Master of Business Administration
G.N.D.Engg. College, BIDAR-585 403

Dr. Dhananjay Muktedar
Principal
PRINCIPAL
Guru Nanak Dev Engg. Coll.
BIDAR

EXTERNAL VIVA VOCE

NAME OF THE EXAMINERS	**SIGNATURE WITH DATE**
1. Dr. Ashwin P	10/11/22
2. Harshavardhan. M	10/11/2022

PRINCIPAL
Guru Nanak Dev Engg. College, Bidar

Sai Make it better together

28th May 2022

TO WHOMSOEVER IT MAY CONCERN

This is to certify **Ms. Javeria Meher** has successfully completed her Internship with **Sai Life Sciences Limited** from **11th April 2022 to 26th May 2022** under the guidance of **Mr. Hitesh Desai – Associate Director, HR.**

She has done a project work entitled as **"Employee Engagement & Motivation".**

During this tenure, her responsibilities were:

1. Observed the operations of Human Resource Department and their day-today activity such as Employee Engagement, HR policies and Procedures etc.
2. Understood how HR plays major role in the retaining of good employees in the organization.
3. Observed how organization keeps the employee engaged and the job satisfaction is given utmost priority in employee retention strategies.
4. Observed how employees' health and safety is given more importance with respect to all the facilities required in the organization.
5. Understood the Organization hierarchy, its functions & roles.

During her Internship she was found regular & punctual.

We wish her very best for her future endeavours.

For SAI LIFE SCIENCES LIMITED

RV Naik

Rajesh Vinodrai Naik
Vice President & Global Head – Human Resources.

Sai Life Sciences Limited (CIN: U24110TG1999PLC030970)

Corporate office
L4-06, SLN Terminus, Survey #133, Gachibowli Miyapur Road, Gachibowli, Hyderabad – 500032, Telangana, India.

Registered office
Plot No. DS-7, IKP Knowledge Park, Turkapally (V), Shameerpet Mandal, Medchal-Malkajgiri Dist-500078, Telangana, India.

Contact us
T: +91 40 6815 6000,
F: +91 40 6815 6199
E: info@sailife.com
W: www.sailife.com

PRINCIPAL
Guru Nanak Dev Engg. College, Bidar

EXECUTIVE SUMMARY

The title of the report is on **"Employee Engagement and Motivation"** at **"Sai life science Ltd"**. Sai life science Ltd has a very good number of employee engagement percentages. Employee engagement leads to job satisfaction & being an intern of choice at Sai life science Ltd., is a very attractive work place in the manufacturing field.

Sai life science Limited performs its employee engagement program through its own HR division. The HR consisting only four people is responsible for the employee engagement activities at Sai life science Ltd., as a cost leadership following company is performing exceptional in the pharmaceutical industry in India.

HR practitioners believe that the engagement challenge has a lot to do with how employee feels about the work experience and how he or she is treated in the organization. It has a lot to do with emotions which are fundamentally related to the bottom line success in a company.

There will always be people who never give their best efforts no matter how hard HR and line managers try to engage them. But for the most part employees want to commit to companies because doing so satisfies a powerful and a basic need in connect with and contribute to something significant

The study helps to gain an understanding of employee engagement measures, factors affecting employee engagement, practices to improve employee engagement and advantages of having engaged employees.

This study includes the procedure as: Visiting the company and discussing with HR and Preparing an appropriate Questionnaire for identifying Employee Engagement within the organization.

Employee engagement plays a very vital role in each and every organization. It helps to engaging the employees in their particular work field, and employee engagement is means of understanding communication between the employees and the HR of the organization. The HR plays a major role in performing the employee engagement activities, the HR should come up with new ideas and new innovative minds I fulfilling the needs of the employees of all the organization.

For preparing this project report I went to SAI LIFE SCIENCES LTD, Bidar. For the 45 days period of time, to learn and analyse the different factors of the staff and to identify the problem.

PRINCIPAL
Nanak Dev Engg. College, Bidar

GURU NANAK DEV ENGINEERING COLLEGE, BIDAR

DEPARTMENT OF MBA

CERTIFICATE

This is to certify that Miss. **KAVERI** being **USN: 3GN20BA021** is a Bonafide student of Master of Business Administration course of the Institute 2020-22, affiliated to Visvesvaraya Technological University, Belagavi. Project report on **"Employee Training and Development in Nandi Cylinders Pvt Ltd."** is prepared by her under the guidance of **Prof. Kalyanrao K** in partial fulfillment of the requirements for the award of the degree of Business Administration of Visvesvaraya Technological University, Belagavi Karnataka.

Prof. Kalyanrao K
(Internal Guide)

Prof. Jyoti Ainapur
Head of the Department
Master of Busines Administration
G.N.D.Engg. College, BIDAR-585403
(HOD MBA)
(KARNATAKA)

Dr. Dhananjay D Muktedar
PRINCIPAL
(PRINCIPAL)
Guru Nanak Dev Engg. College
BIDAR

EXTERNAL VIVA-VOICE

NAME OF THE EXAMINER:

1 Amarnath. N.K
CABE, Bidar

2 Kalyanrao

SINGATURE WITH DATE

9/11/22

9/11/22

PRINCIPAL
Guru Nanak Dev Engg. College, Bidar

NANDI CYLINDERS PVT. LTD

(AN ISO 9001 - 2008 CERTIFIED COMPANY)

Date: 15/07/2022

To,
The Principal,
Grunanak Dev Engineering College,
Mailor Road,
Bidar -585403,
Karnataka.

Dear Sir,

Sub: Completion of project work

As per your letter dated on **02.06.2022** requesting to allow **KUM.KAVERI D/O ARJUNRAO** bearing **USN No: 3GN20BA021**. MBA student from your college towards her project work for a period of four weeks from (06.06.2022 to 07.07.2022).She has completed the project. work, at our plant situated at Pratab Nagar Bidar.

While undergoing training she is found to be obedient and sincere in learning.

Thanking You

For Nandi Cylinders Pvt Ltd,

Authorized Signature

Regd. Office : Flat No. G-A, Kanaka Durga Bhavan, Kachiguda, Hyderabad - 500 027. A. P.
Phone : 040 - 32580305
Works : PLOT NOS. 52 & 53, NAUBAD INDUSTRIAL AREA, BIDAR - 585 401. KARNATAKA
PHONE : FACT : 08482 - 232036 & 232037

Executive summary

Training is not critical as long as current or future residents meet these requirements. On the other hand, if this does not work, the skill level needs to be improved to increase the stability and adaptability of the workforce. Also, employees are an internal asset of an organization. Training enables all employees to work as efficiently as possible to achieve the organization's goals.

Today's development needs, as we live in the information age, organizations place great importance not only on their physical capital but also on their intellectual capital. Education is one of them.

An integrated approach to managing and improving intellectual capital and hence quality Employees spend working hours attending training sessions, delaying project completion. Although there are opportunities to learn and grow

An organization benefits from collective individual efforts, making it a worthwhile investment. M&J Group, a large textile merchant, reported in 1965 on the business of the company's textile division. This report covers all HR processes like recruitment and selection, training and development, performance management and employee recruitment.

Discuss how a company develops its business strategy and strategic HR practices. The new role of strategic human resource management has implications.

I tried to advise companies with limited knowledge and experience in SHRM. Finally, the report is based on our analysis of SHRM M&J Group's organizational structure and HR practices.

PRINCIPAL
Guru Nanak Dev Engg. College, Bidar

GURU NANAK DEV ENGINEERING COLLEGE, BIDAR

DEPARTMENT OF MBA

This is to certify that, **Mr. KIRAN** bearing **USN: 3GN20MBA022** is a bonafide student of the Master of Business Administration course of the Institute (2020-2022), affiliated to Visvesvaraya Technological University, Belagavi. Project report on **"BRAND AWARENESS TOWARDS APOLLO TYRES IN BIDAR CITY"** is prepared by him under the guidance of **PROF. KALYANRAO. K,** in partial fulfillment of the requirements for the award of the degree of Master of Business Administration of Visvesvaraya Technological University, Belagavi Karnataka.

Prof. Kalyanrao. K

(Internal Guide)

Prof. Jyoti Ainapur

(HOD)
Head of the Department
Master of Busines Administration
G.N.D.Engg.College, BIDAR-585403
(KARNATAKA)

Dr. Dhananjay D Muktedar
PRINCIPAL
Guru Nanak Dev Engg. College
BIDAR

External Viva-Voce:

Name of Examiners:

1. Amarnath N. K
LAEC, Bidar

Kalyanrao K.

Signature with Date

09/11/22

9/11/22

PRINCIPAL
Guru Nanak Dev Engg. College, Bidar

POKALWAR Tyres & Services
Apollo C V Zone (Branch 2)
Plot No. 245 (B) Inside Chowli Kaman
Near Auto Nagar, **Naubad, BIDAR** - 585 402

PG
POKALWAR GROUP

TO WHOM SO EVER IT MAY CONCERN

This is to certify that Mr. Kiran USN No. 3GN20BA022 a student of MBA 4th sem from "**Guru Nanak Dev Engineering College Bidar**", successfully completed his internship on "**Brand Awareness Towards Apollo Tyres In Pokalwar Tyres & Services**", From: 26-03-2022 to 07-05-2022.

His performance and behavior during the project work found well, we wish him all the best for his future Endeavors.

For Pokalwar Tyres & Services

19/07/2022

Suraj Pokalwar (Prop)

POKALWAR TYRES & SERVICES
Apollo Dealers & Distributers
Opp. Rang Mandir, Nehru Stadium
Road, BIDAR - 585401

Head Office :
Opp. Rang Mandir,
Nehru Stadium Road, BIDAR - 585 401
+91 9611445353 | +91 9110264681
pokalwarsuraj@gmail.com

apollo TYRES
GO THE DISTANCE

PRINCIPAL
Guru Nanak Dev Engg. College, Bidar

EXECUTIVE SUMMARY

The month in plant preparing of VTU is tied in with learning an association and the corporate procedures in it. This program is planned with the expectation of colligating the hierarchical setting with reference to the operational definition and to apply the concepts already learnt to solve management decisions situations.

The executive summary of this study was assorted into five sections, wherein sec A pertained to the study of industry profile and company profile, B pertained to the study of mckensy's 7' S framework with special references to organization study structure, skill, style, strategy, system, staff, shared value, sec C pertained to SWOT analysis of the company's , Sec D pertained to the study of the latest annual report of the company and finally Sec D pertained to the overall learning experience.

The study was dedicated by conceiving the research design of observing, interviewing and undergoing through both primary as well as secondary data, the study mainly concentrates on the study of Mckensy's 7s model. The collected data were analyzed and the findings, suggestions, and recommendations were summed up.

Objectives of the study:

- To analysis the products range of the company.
- To gather the data and their frame of mind from tires client.
- To realize the mindfulness dimension of clients of Apollo tires exceptionally.

Scope of the study:

- It is worried about sale as well as delivery of Apollo Tires.
- Investigate on top of Promotional policy of Apollo Tires.

PRINCIPAL
Guru Nanak Dev Engg. College, Bidar

GURU NANAK DEV ENGINERRING COLLEGE, BIDAR

DEPARTMENT OF MBA

CERTIFICATE

This is to certify that **MISS. LAXMI** bearing **USN: 3GN20BA023** is a Bonafide Student of Master of Business Administration course of the institute (2020-2022), affiliated to Visvesvaraya Technological University, Belagavi. Project report on **"EMPLOYEE TRAINING AND DEVELOPMENT"** at **"CORVINE PHARMACEUTICAL & CHEMICAL PVT. LTD. KOLLAR, BIDAR"** is prepared by her under guidance of **PROF. HARSHAVARDHANA MITRA** in partial fulfillment of the requirements for the award of the degree of Master of Business Administration of Visvesvaraya Technological University, Belagavi Karnataka.

PROF. HARSHAVARDHANA MITRA
(INTERNAL GUIDE)

PROF. [illegible]
Head of the Department
Master of Busines Administration
G.N.D.Engg. College, BIDAR-585403
(KARNATAKA)

DR. DHANANJAY D MUKTEDAR
PRINCIPAL
PRINCIPAL
Guru Nanak Dev Engg. College
BIDAR

EXTERNAL VIVA-VOCE

NAME OF THE EXAMINERS	**SIGNATURE WITH DATE**
1 Harshavardhan. M	
2 Dr Abhinp	

PRINCIPAL
Guru Nanak Dev Engg. College, Bidar

CORVINE CHEMICALS & PHARMACEUTICALS LTD.

Admn. Office :
Plot No. 735, Venkateswara Hills,
Road No. 3, Banjara Hills,
Hyderabad - 500 034, T.S. India.
Phones : 91-40-23354928, 23354931
E-mail : hyd1_mahipal@sancharnet.in
Website : www.corvinechemicals.com

Regd. Office :
Plot No. 135E,
Kolhar Industrial Area,
BIDAR - 585 402, Karnataka
Phones : 08482-232204
: 08482-232297

CERTIFICATE

TO WHOM SO EVER IT MAY CONCERN

This is to certify that **MISS. LAXMI, USN 3GN20BA023** pursuing Master of Business Administration in Guru Nanak Dev Engineering College Bidar completed project on **"Employee Training and Development"** in our Organization. During the period from **26/03/2022 to 07/05/2022.**

Her performance during project period was satisfactory.

We wish her all the best for her future tenure.

For Corvine Chemicals & Pharmaceuticals Ltd,.

Plant Manager.

CORVINE CHEMICALS & PHARMACEUTICALS LTD. BIDAR

PRINCIPAL
Guru Nanak Dev Engg. College, Bidar

EXECUTIVE SUMMARY

STATEMENT FOR THE PROBLEM:

Training and Development is of paramount importance. By pursuing the training and development systems in the company, the aim is to gather the opinion of the employees about the training programmers and how it influences them and its results for the company's progress.

SCOPE FOR THE STUDY:

- The purpose of the study was limited to employees only
- The study was conducted to reveal the employee's perception towards management and training program conducted
- The study was conducted at ShreeGen Pharma Ltd.

LIMITATIONS OF THE STUDY

The following things may affect my research project:-

1) Availability of secondary data
2) Respondents may be hesitated
3) Limited time available for the study

PRINCIPAL
Guru Nanak Dev Engg. College, Bidar

GURU NANAK DEV ENGINEERING COLLEGE, BIDAR

DEPARTMENT OF MBA

CERTIFICATE

This is to certify that **Miss. MALGE RABEKA** being **USN: 3GN20BA024** is a Bonafide student of Master of Business Administration course of the Institute 2020-22, affiliated to Visvesvaraya Technological University, Belagavi. Project report on **"Employee Training and Development in Shreegen Pharma Pvt Ltd."** is prepared by her under the guidance of **Prof. Kalyanrao K** in partial fulfillment of the requirements for the award of the degree of Business Administration of Visvesvaraya Technological University, Belagavi Karnataka.

Prof. Kalyanrao K
(Internal Guide)

Prof. Jyoti Ainapur
Head of the Department
Master of Busines Administration
G.N.D.Engg. College, BIDAR-585403
(KARNATAKA)
(HOD MBA)

Dr. Dhananjay D Muktedar
PRINCIPAL
Guru Nanak Dev Engg. College
BIDAR
(PRINCIPAL)

EXTERNAL VIVA-VOICE

NAME OF THE EXAMINER:	SINGATURE WITH DATE
1 Amarnath. N.K GAEC, Bidar	9/11/22
2 Kalyanrao K	9/11/22

PRINCIPAL
Guru Nanak Dev Engg. College, Bidar

ShreeGen Pharma Ltd.
Better Chemistry. Better Health

Reg. Office : Flat No. : 405, Dasaiah Plaza, Goods Shed Road, Moosapet, Kukatpally, Hyderabad - 500 018, Telangana, India. Tel : +91 40 23868399, Fax : +91 40 23869399

Date: 04.04.2022

Ref.No.SLDC/PT/2020-21/002

To

The Principal,
Guru Nank Dev Engineering College,
Maloor Road,
Bidar.

Sir,

Sub: Project Training during 26.03.2022 to 07.05.2022.

Ref:- Your college letter dated 26.03.2022

With reference to your letter, we are allowing kum., MALGE RABEKA, USN (3GN20BA024) a student MBA IV semester of your college, to carry out project Internship (Organization study) Training in our factory for a period w.e.f 26.03.2022 to 07.05.2022.

Thanking you,

Copy to Kum RABEKA, USN (3GN20BA024)

Copy to

Yours faithfully,

MANAGING DIRECTOR

SHREEGEN PHARMA LTD. BIDAR

1. A/c
2. Est.
3. Security

Factory : Plot No. 135F, KIADB, Kolhar Industrial Area, Bidar - 585403, Karnataka, India.
+91 8482 232 733, Fax : +91 8482 232 299 | Email : info@shreegen.com, Website : www.shreegen.com

PRINCIPAL
Guru Nanak Dev Engg. College, Bidar

EXECUTIVE SUMMARY

Each and every organization aspiration to comprehend their goal and objective by making employee engaged with worker.

The project report executive and presented relies on HR one amongst imported function Employees Training and Development.

In this project I'm visiting provides a brief description on the training and development employees at Shreegen Pharma Pvt Ltd.

The worker has to preparation at the elemental level in the working place and keeping attracted out fitting with the correct condition and strength the labours development productivity and achieve the better results.

Shreegen Phrama journey so far has been full of challenges since its founding in 2013 By It's the founder Managing Directors "Rama Mangeswar Reddy Bobbiti, Pharma.

OBJECTIVES OF STUDY:

- Employees must do their job or use the machine to train and test their skills.
- Explore the various courses offered by the institution.
- Understanding the level of employees.

LIMITATION OF STUDY:

- Study is limited to the questions included in the questionnaire.
- Limited sample size.
- Questionnaire was filled only by selected persons in the Shreegen Pharma Pvt Ltd.

PRINCIPAL
Guru Nanak Dev Engg. College, Bidar

SCOPE OF THE STUDY:

- The growth of a company depends on its employees. Training and job development are very important for an organization.
- Elsen's study was conducted at Shreegen Pharma with a sample of 50 people.
- Help managers understand employee satisfaction and measure performance.

FINDINGS:

- The maximum employees are said company conduct training and development programme on half yearly bases.
- Maximum respondents have attended 3 to 4 times training sessions.
- Most of the respondents said trainer always ready to clear the doubts regarding the topic.

SUGGESTIONS:

- Provide training to make interpersonal relationships more effective.
- Employees should try to participate in the training.
- Learning through intervention on an individual level is the key to success.

CONCLUSION:

- This course is a learning experience for me and I Shreegen Pharma Industry Pvt. Member Ltd. However, further training and development courses are still needed to assist Shreegen Pharma industry staff.
- King Shreegen Pharma cares a lot about his employees and goes to great lengths to support the training of his employees. Most employees focus on team building and leadership development.

PRINCIPAL
Guru Nanak Dev Engg. College, Bidar

GURU NANAK DEV ENGINEERING COLLEGE,BIDAR

DEPARTMENT OF MBA

CERTIFICATE

This is to certify that **MISS. PAVITRA** being **USN: 3GN20BA027**is a Bonafide Student of Master of Business Administration course of the Institute 2020-22. affiliated to Visvesvaraya Technological University, Belagavi. Project report on **"RECRUITMENT AND SELECTION in Naranja Sahakari Sakkare Karkhane Ltd. Bidar"**is prepared by her under the guidance of **Prof. Mahesh Kumar M** in partialfulfilment of the requirements for the award of the degree Master of Business Administration of Visvesvaraya Technological University. Belagavi Karnataka

Prof. Mahesh Kumar. M

(Internal Guide)

Prof. Jyoti Ainapur
Head of the Department
(HOD MBA)
Master of Busines Administration
G.N.D.Engg. College, BIDAR-585403
(KARNATAKA)

Dr. Dhananjay D Muktedar
PRINCIPAL
(PRINCIPAL)
Guru Nanak Dev Engg. College
Bidar

EXTERNAL VIVA-VOICE

NAME OF THE EXAMINER:	SINGATURE WITH DATE
1 Dr Abhinap	10/11/22
2 Mahesh Kumar M	

PRINCIPAL
Guru Nanak Dev Engg. College, Bidar

ನಾರಂಜಾ ಸಹಕಾರಿ ಸಕ್ಕರೆ ಕಾರ್ಖಾನೆ ನಿಯಮಿತ, ಬೀದರ
THE NARANJA SAHAKARI SAKKARE KARKHANE LTD; BIDAR

Ref: NSSKB/ADM/2021-22

Date:21.07.2022

CERTIFICATE

This is to certify that **MS. PAVITRA** bearing **USN: 3GN20BA027** Student of Master of Business Administration (M.B.A) studying in **Guru Nanak Dev Engineering College, Mailoor Road, Bidar**. She has Successfully Completed project on **"RECRUITMENT AND SELECTION SYSTEM ADOPTED IN NARANJA S.S.K. LTD., BIDAR"** from the period 26.03.2022 to 07.05.2022.

Her performance during project period was good.

We wish her all success

For Naranja SSK Ltd,

Managing Director

PRINCIPAL
Guru Nanak Dev Engg. College, Bidar

EXECUTIVE SUMMARY

One of the main businesses that significantly contributes to the expansion of the rural economy is the sugar industry. It's also interesting to note that the sugar businesses are making heavy use of rural resources and working extremely hard to meet both the country's growing electricity needs and its high sugar demand.

The sugar industry is regarded as being dependent on agriculture. As a result, these enterprises are always located in rural areas.

A cooperative venture, Naranja S.S.K Ltd. has been leading its efforts since 1982 and has a significant impact on both the general socio-economic growth of the area and the socio-economic development of the former in particular.

PRINCIPAL
Guru Nanak Dev Engg. College, Bidar

GURU NANAK DEV ENGINEERING COLLEGE, BIDAR

DEPARTMENT OF MBA

CERTIFICATE

This is to certify that **Miss.POOJA KULKARNI** bearing **USN: 3GN20BA028** is a Bonafide student of **Master of Business Administration** course of the Institute **(2020-2022),** affiliated to Visvesvaraya Technological University, Belgavi. Project report on **"CUSTOMER SATISFACTION OF SONALIKA TRACTORS"** in **"BHAVANI MOTORS,BIDAR"** is prepared by her under the guidance of **PROF:HARSHVADHAN J MITRA,** in partial fulfillment of the requirements for the award of the degree of Master of Business Administration of Visvesvaraya Technological University, Belagavi Karnataka.

Prof.Harshavardhan J Mitra
(InternalGuide)

Prof. Jyoti Ainapur
(HOD)
Head of the Department
Master of Busines Administration
G.N.D.Engg. Coilege, BIDAR-585403
(KARNATAKA)

Dr. Dhananjay D Muktedar
(Principal)
PRINCIPAL
Guru Nanak Dev Engg. College
BIDAR

EXTERNAL VIVA VOCE

NAME OF THE EXAMINERS:

SIGNATURE WITH DATE

1. 21/10/22
2.

PRINCIPAL
Guru Nanak Dev Engg. College, Bidar

JAI BHAVANI MOTORS

Authorised Dealer : SONALIKA INTERNATIONAL TRACTOR
9-9-342/1, Near Harurgeri Kaman Bidar-585403.
Cell: 9449587035. FST : 29AJIPG1498D3Z2

CERTIFICATE

This is to certify that **MISS.POOJA KULKARNI USN(3GN20BA028)** MBA-IVth Semester a student of **Guru Nanak Dev Engineering College** Bidar-585403,has successfully completed her Internship on ' **EMPLOYEE JOB SATISFACTION**' in **JAI BHAVANI MOTORS,BIDAR** from **26/3/22 TO 7/05/22** during the period she has taken good imitative and Interest in completing the study.

She has obtained necessary information and completed her industrial training.
We wish all the best for her future end over.

JAI BHAVANI MOTORS
BIDAR

PRINCIPAL
Guru Nanak Dev Engg. College, Bidar

EXECUTIVE SUMMARY

Customer satisfaction is defined as a measurement that determines how happy customers are with a company's products , services, and capabilities . customer satisfaction information , including surveys and ratings, can help a company determine how to best improve or changes its products and services increase in revenue.

As such, 86% of buyers are willimg to pay more for a great customer experience, which means happy customers will lead to more revenue.

An increase in more loyalty……

More brand buzz…

Less negative word of mouth …..

A difference in competition.

Customer satisfaction is a measure of how people feel when interacting with your brand. It can be influenced by any number of factors, such as :

- Percevied product quality
- Perceived product value
- Convenience
- Customer expectations
- Communication
- Complaint handling

Every brand , no matter how successful, wants to improve customer satisfaction . to do that, they need to define two things

1. Who their customers are
2. What it takes to satisfy them

PRINCIPAL
Guru Nanak Dev Engg. College, Bidar

GURU NANAK DEV ENGINEERING COLLEGE, BIDAR

DEPARTMENT OF MBA

CERTIFICATE

This is to certify that **Miss. PRAMILA** being **USN: 3GN20BA029** is a Bonafide student of Master of Business Administration course of the Institute 2020-22, affiliated to Visvesvaraya Technological University, Belagavi. Project report on **"Work Life Balance Of Employees Karanja Industries (Kraft Division) Pvt Ltd."** is prepared by her under the guidance of **Prof. Mahesh Kumar M** in partial fulfillment of the requirements for the award of the degree of Master Business Administration of Visvesvaraya Technological University, Belagavi Karnataka.

Prof. Mahesh Kumar M (Internal Guide)	Prof. Jyoti Ainapur Head of the Department (HOD MBA) Master of Busines Administration G.N.D.Engg. College, BIDAR-585 403 (KARNATAKA)	Dr. Dhananjay D Muktedar PRINCIPAL (PRINCIPAL) Guru Nanak Dev Engg. College BIDAR

EXTERNAL VIVA-VOICE

NAME OF THE EXAMINER:	SINGATURE WITH DATE
1 Dr. ABhaip	
2 Prof Mahesh Kumar M	27/10/22

PRINCIPAL
Guru Nanak Dev Engg. College, Bidar

SUBJECT TO BIDAR JURISDICTION

Karanja Industries Private Limited

(KRAFT DIVISION)

AKKA MAHADEVI COLONY, BIDAR - 585 401.

MANUFACTURER OF QUALITY KRAFT PAPER

Cin-U25199KA1992PTC012992

Phone : 08482-228147, 228902 Email : karanjabidar@yahoo.com • Website : www.karanjaindustries.com

Date : _____

Ref. No.

KIPL/CERT/22-23/ 657

12 05 2022

TO WHOMSOEVER IT MAY CONCERN

This is to certify that **Miss.Pramila USN: 3GN20BA029** a **student of MBA IVth Sem from "Guru Nanak Dev Engineering College Bidar,** successfully completed her Internship on **"Work life balance of employee" in Karanja Industries Pvt. Ltd. Kraft Division, at Vill: Sindbandgi, Tq: Humnabad, Dist. Bidar " from 26-03-2022 to 07-05-2022.**

Hence certified.

For KARANJA INDUSTRIES PVT LTD.

MANAGING DIRECTOR.

PRINCIPAL
Guru Nanak Dev Engg. College, Bidar

EXECUTIVE SUMMARY:

"ORGANIZATION" as the name suggests it is an organized system or body of people. To understandthe function of any organization practically there is a need to come out of the theoretical study and to have a hook on the real organization to analyse and compare the theory with the practical. This could be achieved only one will go through the real practical experience.

This 6 weeks internship is helps to know there real picture of the organization. Its policies, procedures, methods, and more over to understand whether our theoretical aspects are relay implemented by any company or not. This is helps to learn the new methods, technology used by the company.

It enhance the knowledge about the company and its competitors and the technique strategies adopted by them to meet there competition. overall it helps in knowing learning and to study any organization closely.

PRINCIPAL
Guru Nanak Dev Engg. College, Bidar

GURU NANAK DEV ENGINEERING COLLEGE

BIDAR

DEPARTMENT OF MBA

CERTIFICATE

This is to certify that Ratna USN 3GN20BA031 is a bonafide student of Master of Business Administration course of the Institute 2020-22, affiliated to Visvesvaraya Technological University, Belgaum. Project report on "Training and Development in Mahindra Shah Motors" is prepared by her under the guidance of Prof. Mahesh Kumar M, in partial fulfillment of the requirements for the award of the degree of Master of Business Administration of Visvesvaraya Technological University, Belagavi Karnataka.

Prof. Mahesh Kumar M Internal Guide	Prof. Jyoti Aigapur HOD Head of the Department Master of Busines Administration G.N.D.Engg. College, BIDAR-585403 (KARNATAKA)	Dr. Dhananjay D Muktedar PRINCIPAL Principal Guru Nanak Dev Engg. College BIDAR

EXTERNAL VIVA VOCE

NAME OF THE EXAMINERS	SIGNATURE WITH DATE
1. Dr. A Bhaskar	27/10/22
2. Prof. Mahesh Kumar. M	27/10/2022

PRINCIPAL
Guru Nanak Dev Engg. College, Bidar

29ADSFS1981M1Z1

✉ : shahmotorsbdr@gmail.com

TO WHOSOEVER MAY CONCERN

This is to certify that Miss. Ratna Reg. No. USN: 3GN20MBA031 a student of MBA 3rd And 4th Semester from "Guru Nanak Dev Engineering Collage Bidar,

Successfully completed her Project on "H.R Department" in Shah Mahindra Motors Pvt. Ltd. Humnabad Road Naubad, Dist. Bidar" From 26/03/2022 to 07/05/2022

Hence Certified.

From Shah Motors Pvt. Ltd.

Branch Manager

SHAH MOTORS KALABURAGI

PRINCIPAL
Guru Nanak Dev Engg. College, Bidar

Executive Summary

Mumbai is home to the global Indian vehicle manufacturing company Mahindra & Mahindra Limited (M&M). It started off as Mahindra & Muhammad in 1945 before changing its name to Mahindra & Mahindra. M&M is one of India's top car producers by production and is a member of the Mahindra Group. The largest volume producer of tractors worldwide is its subsidiary Mahindra Tractors. In 2018, Fortune India 500 placed it 17th among the top businesses in India. Maruti Suzuki and Tata Motors are two of its main rivals in the Indian market.

PRINCIPAL
Guru Nanak Dev Engg. College, Bidar

GURU NANAK DEV ENGINEERING COLLEGE

BIDAR

DEPARTMENT OF MBA

CERTIFICATE

This is to certify that Reena Balwani USN 3GN20BA033 is a bonafide student of Master of Business Administration course of the Institute 2020, affiliated to Visvesvaraya Technological University, Belagavi. Project report on "Employee Job Satisfaction in Easybuy Bidar (Shiva Retails) " is prepared by her under the guidance of Prof.Jyoti Ainapur, in partial fulfillment of the requirements for the award of the degree of Master of Business Administration of Visvesvaraya Technological University, Belagavi Karnataka.

Prof. Jyoti Ainapur	**Prof. Jyoti Ainapur**	**Dr. Dhananjay D.Muktedar**
Internal Guide	Head of the Department HOD Master of Busines Administration G.N.D.Engg.College, BIDAR-585403 (KARNATAKA)	PRINCIPAL Guru Nanak Dev Engg. College Principal BIDAR

EXTERNAL VIVA VOCE

NAME OF THE EXAMINERS	SIGNATURE WITH DATE
1. Dr Ashwini Kumar	
2. Prof Jyoti Ainapur	

PRINCIPAL
Guru Nanak Dev Engg. College, Bidar

SHIVA RETAIL

Ref:

Date:-19-07-2022

SHIVA RETAIL BIDAR

TO WHOMSOEVER IT MAY CONCERN

This is to certify that REENA BALWANI USN No.3GN20BA033 a student of MBA IV Semester Guru Nanak Dev Engineering College Bidar successfully completed her project report on "Employee Job Satisfaction" in Shiva Retail from 26/03/2022 to 07/05/2022.

Her performance and behavior during the project work found good. We would like to wish her all the best for her future

For SHIVA RETAIL

SHIVA RETAIL
Address Shiva Retail
CMC No 8-9-21/1(3) Ground Floor
Gurunath Kolluru Building
Udgir Road, BIDAR-585401

CMC NO : 8-9-21/1(3) GROUND FLOOR GURUNATH KOLLURU BUILDING UDGIR ROAD BIDAR-585401(K.S)

PRINCIPAL
Guru Nanak Dev Engg. College, Bidar

Executive Summary

The fashion business has always been at the forefront of innovation, from the invention of the sewing machine to the rise of e-commerce. In the same way that technology is cyclical and progressive, so is fashion.

By the end of the decade, the fashion business will be one of the biggest in the world and valued more than $3T, predicts CB Insights' Industry Analyst Consensus. Fashion technology is evolving swiftly now more than ever.

Numerous innovations show how technology is speeding, automating, an personalising the fashion business. A few examples are garments that can be worn in virtual reality and robots that can stitch and cut fabric. AI algorithms may even predict design trends. Technology is being used by fashion companies to diversify their revenue sources and business methods.

PRINCIPAL
Guru Nanak Dev Engg. College, Bidar

GURU NANAK DEV ENGINEERING COLLEGE, BIDAR

DEPARTMENT OF MBA

This is to certify that **Miss. ROHEENA BEGUM** being USN: **3GN20BA034** is a bonafide student of **Master of Business Administration** course of the institute **(2020-2022)**, affiliated to **Visvesvaraya Technological University, Belagavi.** Project report on **"A STUDY OF RECRUITMENT AND SELECTION"** at **"PREMIER SURGICALS BIDAR"** is prepared by her the guidance **PROF. MAHESH KUMAR M**, in partial fulfillment of the requirements for the award of the degree of Master of Business Administrations of Visvesvaraya Technological University, Belagavi.

Prof. Mahesh Kumar M (Internal Guide)	Prof. Jyoti Head of the Department Master of Business Administration G.N.D.Engg. College, BIDAR-585403 (KARNATAKA)	Dr. Dhananjay D Muktedar (Principal) PRINCIPAL Guru Nanak Dev Engg. College BIDAR

EXTERNAL VIVA VICE

Name of Examiners:	Signature with date
1. Dr. Ashwin	22/10/22
2. Prof. Mahesh Kumar. M	22/10/22

PRINCIPAL
Guru Nanak Dev Engg. College, Bidar

CERTICFICATE

This is Certify that **Miss. Roheena Begum** Bearing USN (3GN20BA034) MBA Student Of **GURU NANAK DEV ENGINEERING COLLEGE**, BIDAR Has Successfully Completed Her Project In Our Organization **Premier Surgicals Pvt Ltd Bidar.** 6 Weeks from Date 26/03/2022 to 07/05/2022.

As A part of Curriculum.

She was regular, punctual attentive the project period at our organization we wish her all the Success in her future endeavors.

M/s. Premier Surgicals

Authorized Signatory

PREMIER SURGICALS BIDAR-585403

Plot No. 207, Road No. 6, Kolhar Industrial Area, Bidar- 585403, Karnataka, India.
Phone:08482 – 232966, Mail: info@premiersurgicals.in Website : www.premiersurgicals.in

PRINCIPAL
Guru Nanak Dev Engg. College, Bidar

EXECUTIVE SUMMARY

The title of the project is "Premier Surgical" (at Kolhar, Bidar). This company has recently entered the market.

M/s PREMIER SURGICALS is a proprietary unit established as manufacturing enterprises by its proprietor Sri Syed Zaheer resident of plot. No. 509, Jubilee Hills, Hyderabad-500036, Andhra Pradesh with the aim to manufacture the surgical cotton & related cotton products like napkins, etc. the unit purchased the sick unit named M/s Monarch Surgical private limited situated at, Plot No. 207, Kolar Industrial area Bidar from KSFC under Section-296 of SFCS act 1951.

The unit here with applies for the renewal of the consent granted to the unit in the year 1996, so that the unit can be started at the earliest. The entrepreneurs are expensed for more than 15 years in manufacturing

Statement of the problem

- The study of conducted to find out over all impact of recruitment employees recruiting the organization.
- Organization gear may not evaluate the candidate.
- Recruitment and selection stay away from some problems look up the probability of succes

PRINCIPAL
Guru Nanak Dev Engg. College, Bidar

GURU NANAK DEV ENGINEERING COLLEGE, BIDAR

DEPARTMENT OF MBA

This is to certify that **Miss. RUKMINI** being USN: **3GN20BA035** is a bonafide student of **Master of Business Administration** course of the institute **(2020-2022)**, affiliated to **Visvesvaraya Technological University, Belagavi.** Project report on **"A STUDY ON SKILLS DEVELOPMENT TOWARDS HAL"** at **"HINDUSTAN AERONAUTICS LIMITED BANGALORE"** is prepared by her the guidance **PROF. MAHESH KUMAR M,** in partial fulfillment of the requirements for the award of the degree of master of Master of Business Administrations of Visvesvaraya Technological University, Belagavi.

Prof. Mahesh Kumar M
(Internal Guide)

Prof. Jyoti Ainapur
(HOD)
Head of the Department
Master of Busines Administration
G.N.D.Engg. College, BIDAR-585403
(KARNATAKA)

Dr. Dhananjay D Muktedar
(Principal)
PRINCIPAL
Guru Nanak Dev Engg. College
BIDAR

EXTERNAL VIVA VICE

Name of Examiners: **Signature with date**

1. Dr. A Srinivas 27/10/22
2. Prof. Mahesh Kumar. M 27/10/22

PRINCIPAL
Guru Nanak Dev Engg. College, Bidar

ವಿಮಾನ ವಿಭಾಗ / एयरक्राफ्ट प्रभाग / AIRCRAFT DIVISION
ಬೆಂಗಳೂರು ಸಂಕೀರ್ಣ / बेंगलूर कॉम्प्लेक्स / BANGALORE COMPLEX
ಹಿಂದೂಸ್ಥಾನ್ ಏರೋನಾಟಿಕ್ಸ್ ಲಿಮಿಟೆಡ್
हिन्दुस्तान एरोनॉटिक्स लिमिटेड
HINDUSTAN AERONAUTICS LIMITED

ಅಂಚೆ ಪೆಟ್ಟಿಗೆ ಸಂಖ್ಯೆ ೧೭೮೮, ಬೆಂಗಳೂರು-೫೬೦೦೧೭, ಭಾರತ
पोस्ट बैग सं.1788, बेंगलूरु - 560017, भारत
Post Bag No.1788, Bengaluru - 560017, India
Ph. : 91 - 80 - 2231 1741
Fax : 91 - 80 - 2231 5188

No.A.HR/509/ /2022

June , 2022

CERTIFICATE

यह प्रमाणित किया जाता है कि श्री.रुक्मिनि , यूएसएन 3GN20BA035, गुरुननक देव एंगिनीरिंग कोल्लेगे, बिदर, के एक बोनाफाइड एम बि ए छात् ने 18.04.2022 से 02.06.2022 तक एयरक्राफ्ट प्रभाग, एचएएल, बैंगलूरू में अपनी प्रोजेक्त पूरी की है।

This is to certify that ***Ms.Rukmini ,*** *(USN* 3GN20BA035*) a bonafide MBA student of Gurunanak Dev College of Engineering, Bidar has successfully completed her Project on "Skill Development" at Aircraft Division, HAL, Bangalore from 18.04.2022 to* 02.06.2022.

2. हम उसे भविष्य के प्रयासों के लिए शुभकामनाएं और सफलता की कामना करते हैं।

We wish her All the Best, Good Luck and Success in his future endeavors.

(अरोकिया जोती बी /*Arrockia Jothi B)*

वरिष्ठ प्रबंधक (म.सं)/*Senior Manager (HR)*

बी अरोकिया जोती/ B AROCKIA JOTHI
वरिष्ठ प्रबंधक (मा सं) एयरक्राफ्ट प्रभाग
Senior Manager (HR) Aircraft Division
एचएएल (बी सी) / HAL (BC)

Ms.Rukmini.
M B A,
Gurunanak Dev College of Engineering,
Bidar.

PRINCIPAL
Guru Nanak Dev Engg. College, Bidar

EXECUTIVE SUMMERY:

Fabricates of shuttle and airplane, business airplane, tanks, rockets, and other weapon-related gear make up the Aerospace and Defense Industry (A&D) Airplane motors and motor parts, as well as landing stuff, propellers, and rooters, are completely fabricated by aviation and protection organizations.

Objective of the study:

- To identify the effective of the skill development initiative.
- To provide suggestions to the management for improvement.

Limitation of the study:

- The work pressure that the employees felt while quarrying the questionnaire
- Employees were heisted to give their point of view when asked about the satisfaction of the skill development program.

Findings:

- The employees should attend the training is compulsory.
- Shop floor and class room using both training program to employees easy to understand the skills

Suggestions:

- The training program should be on time
- The trainer have more experience

PRINCIPAL
Guru Nanak Dev Engg. College, Bidar

GURU NANAK DEV ENGINEERING COLLEGE, BIDAR

DEPARTMENT OF MBA

CERTIFICATE

This is to certify that **SARDAR BHUPINDER SINGH** bearing USN: **3GN20BA036**, is a bonafide student of Master of Business Administration course of the Institute (2020-2022), affiliated to Visvesvaraya Technological University, Belagavi. Project report on **"A STUDY ON CUSTOMER BEHAVIOUR" With reference to MARUTI SUZUKI ARENA (ADARSHA AUTOMOTIVES PVT. LTD, KARIMNAGAR)** is prepared by him under the guidance of **Prof. ARATI BIRADAR**, in partial fulfillment of the requirements for the award of the degree of Master of Business Administration of Visvesvaraya Technological University, Belagavi Karnataka.

Prof. ARATI BIRADAR **(INTERNAL GUIDE)**	**Prof. JYOTI AINAPUR** **(HOD)**	**DR. DHANANJAY D MUKTEDAR** **(PRINCIPAL)**

Head of the Department
Master of Busines Administration
G.N.D.Engg. College, BIDAR-585403
(KARNATAKA)

PRINCIPAL
Guru Nanak Dev Engg. College
BIDAR

EXTERNAL VIVA-VOCE

NAME OF THE EXAMINERS: WITH DATE	**SIGNATURE**
1. Arati	
2. MAMTA 02/NOV/22	

PRINCIPAL
Guru Nanak Dev Engg. College, Bidar

MARUTI SUZUKI ARENA

Date :- 28/04/2022

TO WHOM SO EVER IT MAY CONCERN

This is to certify that, SARDAR BHUPINDER SINGH, USN:3GN20BA036 MBA student of GURU NANAK DEV ENGINEERING COLLEGE, BIDAR has successfully completed the project work on the topic "A Study on Consumer Behaviour with special reference to Maruti Suzuki Arena in our organization from 26/03/2022 to 07/05/2022.

During this tenure, we found him sincere, hardworking and keen learner. We wish him all the best his future endeavors.

Thanking You.

Yours Faithfully

ADARSHA AUTOMOTIVES PVT. LTD. KARIMNAGAR

PRASHANTH.CH

HR Manager

Adarsha Automotives Pvt. Ltd, *8-6-313/1, Hyd Road, By-Pass Junction, KARIMNAGAR-505 001. Telangana State*
Ph: 7799265599 E-mail: adarsha.kmnr.ccm@marutidealers.com GST: 36AAFCA6098L1Z5

PRINCIPAL
Guru Nanak Dev Engg. College, Bidar

ADARSHA AUTOMOTIVES PVT. LTD.

Executive Summery

In today's generation era consumer buying behavior plays a prominent role cannot be ignored. The industries understood that they are not the one who to decide what to produce or sale products or produced it is the consumer decision.

The study is willing to study the importance and factors that influenced the people (customers) to buy Maruthi Suzuki. It explains the customer's preference towards a brand, here towards Maruti Suzuki. In the report an elaborated information is give related to Maruti Suzuki's development and evolution. Also variously elements buying decision is analyzed. It also has view of different researchers.

It contain objectives and the types of survey method. With the help of questionnaire used and all the data collected. Number of respondents are 150. Their answers has been taken as a form of data and used for interpretation and suggestions and outcome of the study.

The data is collected from various sources such as magazines, reference books from various authors, also from web sites regarding consumer behavior has been analyzed. Interpretation and analysis of data is done. Suggestions and conclusions are given for the improvement of company ad services for their customers.

PRINCIPAL
Guru Nanak Dev Engg. College, Bidar

GURU NANAK DEV ENGINEERING COLLEGE, BIDAR

DEPARTMENT OF MBA

CERTIFICATE

This is to certify that **SHEETAL** bearing **USN: 3GN20BA038** is a bonafide student of Master of Business Administration course of the Institute (2020-2022), affiliated to Visvesvaraya Technological University, Belagavi. Project report on **"EMPLOYEE JOB SATISFACTION"** at **"MAHATMA GANDHI SHAKARA SAKKARE KARKHANE (N)"**is prepared by her under the guidance of **PROF. ARATI BIRADAR**, in partial fulfillment of the requirements for the award of the degree of Master of Business Administration of Visvesvaraya Technological University, Belagavi, Karnataka.

PROF. ARATI BIRADAR	**PROF. JYOTI AINAPUR**	**DR. DHANANJAY D MUKTEDAR**
(Internal Guide)	**(HOD MBA)**	**(Principal)**

Head of the Department
Master of Business Administration
G.N.D.Engg. College, BIDAR-585403
(KARNATAKA)

PRINCIPAL
Guru Nanak Dev Engg. College
BIDAR

EXTERNAL VIVA-VOCE

NAME OF THE EXAMINERS:	**SIGNATURE WITH DATE**
1. Amarnath N.K, AEC, Bidar	9/11/22
2. Arati, GNDEC, Bidar	9/11/22

PRINCIPAL
Guru Nanak Dev Engg. College, Bidar

The Mahatma Gandhi Sahakara Sakkare Karkhane (N)
BHALKI - 585 328 Bidar Dist, Karnataka State
Regn. No. DSK / LGL / RGN / 12 / 91-92 Dated : 08-04-1991

No.MGSSK(N)/EST/2022-23/ 129 Date : 12-05-2022

-:: CERTIFICATE ::-

This is to certify that **MISS.SHEETAL USN(3GN20BA038)**, MBA-IVth Semester a student of **Guru Nanak Dev Engineering College Bidar-585403**, has successfully completed her Internship on **"EMPLOYEE JOB SATISFACTION"** in MGSSK Ltd., Bhalki, from **26-03-2022 to 07-05-2022** during the period she has taken good initiative and interest in completing the study.

She has obtained necessary information and completed her industrial training.

We wish all the best for her future end over.

MANAGING DIRECTOR

To,
Miss.Sheetal USN(3GN20BA038),
Guru Nanak Dev Engineering College Bidar.

PRINCIPAL
Guru Nanak Dev Engg. College, Bidar

EXECUTIVE SUMMARY:

In Bhalki Bidar district of Karnataka MAHATMA GANDHI SAHAKAR SAKKARE KARKHANE was established. It started working in the industry in the late 90's. It's headquarter is in Karnataka, and it started out by building sugar mill. Its cultivation process was scientific. Despite increased focus on traditional cultivation techniques, Mahatma Gandhi sugar factory was the one of the few to bring modernity to this business. The sugar plant has a crushing capacity of 2500 TCD and 13 MW in its cogeneration units.

The project report on employee job satisfaction has done in Bhalki at MGSSK Ltd. Finding the employees happiness in the Organization was the major goal of the research. Employee's fulfillments and gratification is the crucial in inspiring workers to perform to the best of their abilities and contributes to a healthy work environment. A questionnaire was used to gather the main data. The secondary data was gathered from the company's records and websites.

PRINCIPAL
Guru Nanak Dev Engg. College, Bidar

GURU NANAK DEV ENGINEERING COLLEGE,

BIDAR, DEPARTMENT OF MBA

CERTIFICATE

This is to certify that **MR. SHIVA** bearing **USN:3GN20BA039** is a Bonafide dent of Master of Business Administration course of the Institute (2021-2022), iliated to Visvesvaraya Technological University, Belagavi. Project report on **MPLOYEE JOB SATISFACTION at TATA MOTORS. Bidar"** is prepared him under the guidance of **PROF. JYOTI AINAPUR**, in partial fulfillment of the uirements for the award of the degree of Master of Business Administration of Visvesvaraya chnological University, Belagavi Karnataka.

Prof. JYOTI AINAPUR	Prof. JYOTI AINAPUR	DR. DHANANJAY D MUKTEDAR
(Internal Guide)	(HOD MBA)	PRINCIPAL
	Head of the Department Master of Busines Administration G.N.D.Engg. College, BIDAR-585403 (KARNATAKA)	(Principal) Guru Nanak Dev Engg. College BIDAR

EXTERNAL VIVA-VOCE

NAME OF THE EXAMINERS:	SIGNATURE WITH DATE
1. Dr. Ashwini P	22/10/22
2. Prof. Jyothi A	

PRINCIPAL
Guru Nanak Dev Engg. College, Bidar

TIN: 29AEJFS1633L1ZL

NDOL AUTOMOTIVES

TATA MOTORS

mercial Vehicle Dealer

CERTIFICATE

is to certify that Mr. SHIVA having registration number 3GN20BA039 o
A 4th sem student of GURU NANAK DEV ENGINEERING COLLEGE
partment of MBA, has successfully completed his project work in ou
anization on the topic of "Employee job satisfaction ", with relevan
ails guided by our sales team, form 26/03/2022 to 7/05/2022.

wish him good luck for his future endeavour.

SINDOL AUTOMOTIVES 585 401 BIDAR

neral Manager,

DOL AUTOMATIVES

mercial Vehicle Dealer

A MOTORS

r-585401

PRINCIPAL

EXECUTIVE SUMMARY:-

The project report title "EMPLOYEE JOB SATISFACTION" has been studied in bidar at tata motors. To understand the employee s performance the company has conducted job satisfaction hence this topic is analysing that after job satisfaction whether employees were increasing their skill or whether they increasing working efficiency to know this topic chosen.

PRINCIPAL
Guru Nanak Dev Engg. College, Bidar

GURU NANAK DEV ENGINEERING COLLEGE, BIDAR

DEPARTMENT OF MBA

CERTIFICATE

This is to certify that **Mr. SHIVARAJGONDA** bearing **USN: 3GN20BA040** is a Bonafide student of Master of **Business Administration** course of the Institute **(2020-2022)**, affiliated to Visvesvaraya Technological University, Belagavi. Project report on **"CUSTOMER SATISFACTION" at "AMAR SANGMESHWAR TYRES AURAD"** is prepared by him under the guidance of **PROF. JYOTI AINAPUR**, in partial fulfillment of the requirements for the award of the degree of Master of Business Administration of Visvesvaraya Technological University, Belagavi Karnataka.

Prof. Jyoti Ainapur
(Internal guide)

Prof. Jyoti Ainapur
Head of the Department (HOD)
Master of Busines Administration
G.N.D.Engg.College, BIDAR-585403
(KARNATAKA)

Dr. Dhananjay D Muktedar
PRINCIPAL
Guru Nanak Dev Engg. College
BIDAR

EXTERNAL VIVA-VOCE

NAME OF THE EXAMINERS: **SIGNATURE WITH DATE**

1 Dr. Bhaskappa. Huscalure 22/11/22

2. Prof. Jyoti Ainapur

PRINCIPAL
Guru Nanak Dev Engg. College, Bidar

ಅಮರ ಸಂಗಮೇಶ್ವರ ಟೈರ್ಸ್

AMAR SANGMESHWAR TYRES

APMC Yard, Plot No. 13
Bidar-Nanded Road,
Aurad (B) - 585 326.
Cell: 9902660953

MRF TYRES EXCLUSIVE DEALER

DATE : 14/07/2022

TO WHOMO SO EVER IT MAY CONCERN

The is certify that **MR. SHIVARAJGONDA USN: 3GN20BA040** a student of **MBA 4th sem** from **"Guru Nanak Dev Engineering College Bidar,** Successfully completed his intenship on **"Customer satisfacation" in Amar sangmeshwar tyres in Aurad, from :26-03-2022 to 07-05-2022.**

His performance and behaviour during the project work found good, we would like to wish all the best to his future.

AMAR SANGAMESHWAR MRF TYRES AURAD (B)

Hence Certified,

MANAGER

PRINCIPAL
Guru Nanak Dev Engg. College, Bidar

EXECUTIVE SUMMARY:

MRF is India's leading tire company and ranked amongst the Top 20 Global Companies with 9 state-of-the-art manufacturing works across India. It is also India's biggest Original Equipment Company tire supplier with an expansive tire range from two-wheelers to fighter aaircraft The company's industrial facilities are located at Trichy Tiruvottiyur and Arakonam in Tamil Nadu Kottayam in Kerala Ponda in Goa Medak in Andhra Pradesh and Union Territory of Pondicherry.

Objective of the study:

- To find out the consumer fulfillment level through systematic tools like interviews and questionnaire.
- Identity the reason behind the purchase of the MRF Tire

Limitation of study:

- Deficiency of time and some connected possessions not directly influence the review progression.
- Some consumers were not able to appreciate some of the questions.

Founded:

- The respondents purchasing the MRF Tire.
- The price of the MRF Tire is Expensive

Suggestions:

- The giving the discount on purchasing MRF Tire
- The company should maintain the quality and grip

PRINCIPAL
Guru Nanak Dev Engg. College, Bidar

GURU NANAK DEV ENGINEERING COLLEGE,

BIDAR, DEPARTMENT OF MBA

CERTIFICATE

This is to certify that **MR. SHIVSHARNAPPA** bearing **USN:3GN20BA041** is a Bonafide student of Master of Business Administration course of the Institute (2020-2022), affiliated to Visvesvaraya Technological University, Belagavi. Project report on **"CUSTOMER BUYING BEHAVIOUR at GODREJ INTERIO BIDAR"** is prepared by him under the guidance of **PROF. JYOTI AINAPUR**, in partial fulfillment of the requirements for the award of the degree of Master of Business Administration of Visvesvaraya Technological University, Belagavi Karnataka.

Prof. JYOTI AINAPUR	**Prof. JYOTI AINAPUR**	**DR. DHANANJAY D MUKTEDAR**
(Internal Guide)	Head of the Department Master of Busines Administration G.N.D.Engg. College, BIDAR-585403 (KARNATAKA) (HOD MBA)	PRINCIPAL Guru Nanak Dev Engg. College BIDAR

EXTERNAL VIVA-VOCE

NAME OF THE EXAMINERS:	**SIGNATURE WITH DATE**
1. Dr. Bhausappa. Huseknal.	22/11/2022
2. Jyoti Ainapur	

PRINCIPAL
Guru Nanak Dev Engg. College, Bidar

Godrej

VEERBHADRESHWAR INTERIORS

Authorised Dealer of Godrej & Boyce Mfg. Co. Ltd.

Ref.

Date

TO WHOM SO EVER IT MAY CONCERN

This is to certify that Mr. SHIVSHARNAPPA a student of MBA 4th sem from **"GURU NANAK COLLEGE BIDARDEV ENGINEERING"**, successfully completed his project on **"Customer Buying Behavior"** In **"Veerbhadreshwar Interiors Bidar Authorized Dealer of Godrej Interio"**, From: 26-03-2022 to 07-03-2022.

The above project has been successfully carried in our firm. We appreciate his efforts and contribution. We found his conduct good during his association with us. We wish him All The Best for his future Endeavors.

From Veerbhadreshwar Interiors Bidar

SHIV SHANKAR SINDOL (Prop)

VEERBHADRESHWAR INTERIORS BIDAR

160, Rental Complex, Near Railway Station, LIC Office Road, BIDAR-585401
94810 59793, Email : godrejin@gmail.com, GSTIN : 29EKSPS4369G1ZL

PRINCIPAL
Guru Nanak Dev Engg. College, Bidar

EXECUTIVE SUMMARY

The project is the study of consumer buying behavior of Godrej interio in Bidar. The study emphasizes on identifying the perception of customers towards Godrej interio, describe the level of inclusion and sorts of buyer critical thinking process, perceive the phases of consumer buying decision process, make sense of how situational impacts might influence the consumer buying decision process and comprehend the mental impacts that might influence the consumer buying decision process.

The review stresses on recognize the competitors and evaluating the methodologies to decide the qualities and shortcomings comparative with those of the competitor's item or service. The principal behind the review is to give knowledge into a definite market study, led to distinguish the different aspects related with Interio product in market.

Foundation payers like Pepperfry, Livspace.com, Homelane, Kuchina and so on, in the domestic market for modular furniture frameworks are presently coordinating examination into the personal conduct standards at Indian working environments, with the plan, to offer worth added answers for clients. Detecting this, Godrej Interio is giving a ton of significance to statistical surveying as well as competitor understanding at the public level.

Today for any affiliation or firm to squeeze by in this serious world depends upon its ability to be dynamic and be not quite the same as the opposition to be extraordinary in the business. Purchaser fulfillment has an effect every relationship to keep the ongoing client and to collect new client.

The data accumulated through this research can be utilized by the organization to work on its administrations and turned out to be more clients well disposed.

This can grow the thoughtfulness of the association and its overall presentation. Likewise, this study is intended to give the organization some data about its status in market.

The exploration additionally expects to give a few plans to work on the organization's current condition.

PRINCIPAL
Guru Nanak Dev Engg. College, Bidar

GURU NANAK DEV ENGINEERING COLLEGE,BIDAR

DEPARTMENT OF MBA

CERTIFICATE

This is to certify that **M/S. SUHASANI** bearing **USN: 3GN20BA042** is a Bonafide student of Master of Business Administration course of the Institute (2020-2022), affiliated to Visvesvaraya Technological University, Belagavi. Project report on **TRAINING AND DEVELOPMENT at "HYUNDAI SHAH MOTORS BIDAR"** is prepared by her under the guidance of **PROF. KALYANRAO K** , in partial fulfillment of the requirements for the award of the degree of Master of Business Administration of Visvesvaraya Technological University, Belagavi Karnataka.

ASST.Prof. KALYANRAO K (Internal Guide)	PROF. JYOTI AINAPUR Head of the Department Master of Business Administration G.N.D.Engg. College, BIDAR-585403 (KARNATAKA)	DR. DHANANJAY D MUKTEDAR PRINCIPAL (Principal) Guru Nanak Dev Engg. College BIDAR

EXTERNAL VIVA-VOCE

NAME OF THE EXAMINERS:	SIGNATURE WITH DATE
1. Amarnath. N.K, KLE, Bidar	09/11/22
2. Kalyanrao. K.	9/11/22

PRINCIPAL
Guru Nanak Dev Engg. College, Bidar

CamScanner

HYUNDAI

Date:26-03-2022

TO,

The principal

Guru Nanak Dev Engineering college,Malloor

Road

Bidar

Sir,

Sub:- Project training During 26-03-2022 to 07-05-2022

With Reference to your letter, we are allowing Ms Suhasani Biradar(USN:3GN20BA042) a Student MBA IVth semester of your college, to carry out project Internship (Organization study) training in our showroom for a period of i.e. 26-03-2022 to 05-2022

SHAH HYUNDAI
Authorised Dealer in :
Gulbarga, Bidar, Raichur, Yadgir, Sindhanur

Thank you

Sales manager RAJKUMAR

GANGSHETTY

SHAH HYUNDAI
CHANDRASHILP AUTOMOTIVE LLP
Sy. # 21/1 - Madhav Nagar - Naubad - Bidar-585 402 - Cell : 91080 49242
E-mail : shahhyundaibdr@gmail.com - Website : www.shahhyundai.com

CamScanner

PRINCIPAL
Guru Nanak Dev Engg. College, Bidar

EXECUTIVE SUMMARY

The Indian car' thing undertaking 'is overwhelmed' by means of 'around 500 players which represent' more prominent 'than 85% of the' assembling. 'The turnover of this' endeavor 'has been developing at a' immense '28.05% per annum from 2002-03 onwards as outlined in Fig which explains its rise as' considered 'one of India's quickest developing assembling areas.'

For the term of Nineteen Nineties, the auto parts commercial center in India used to be overwhelmed by utilizing assets to the reseller's exchange with just 35% commodities obtained by utilizing global Level 1 OEMs (exceptional contraption producers).

Objectives of the study:

To realize and compare the capabilities of the employees required to carry out his/her job or perform a system.

- To examine the various schooling programs organized by the agency.
- To find out the pride degrees of the personnel.

Limitations of the study:

- Take a look at is confined to the questions blanketed in the questionnaire.
- Restricted pattern length.
- Questionnaire become filled handiest by using selected folks in the SHAH HYUNDAI.

FINDING :

- The most employees are stated enterprise conduct education and development programme on 1/2 yearly bases.
- Maximum respondents have attended 3 to 4 times training periods.
- most of the respondents said teacher always geared up to clear the doubts regarding the topic.

PRINCIPAL
Guru Nanak Dev Engg. College, Bidar

CamScanner

GURU NANAK DEV ENGINEERING COLLEGE, BIDAR

DEPARTMENT OF MBA

This is to certify that **Miss. SUVARNA** being USN: **3GN20BA043** is a bonafide student of **Master of Business Administration** course of the institute **(2020-2022)**, affiliated to **Visvesvaraya Technological University, Belagavi.** Project report on **"A STUDY OF TRAINING AND DEVELOPMENT TOWARDS SUNSHINE HOSPITAL"** at **"SUNSHINE HOSPITAL HYDERABAD"** is prepared by her the guidance **PROF. MAHESH KUMAR M,** in partial fulfillment of the requirements for the award of the degree of Master of Business Administrations of Visvesvaraya Technological University, Belagavi.

Prof. Mahesh Kumar M
(Internal Guide)

Prof. Jyoti Ainapur
Head of the Department
Master of Busines Administration
G.N.D.Engg. College, BIDAR-585403
(KARNATAKA)

Dr. Dhananjay D Muktedar
(Principal)
PRINCIPAL
Guru Nanak Dev Engg. College
BIDAR

EXTERNAL VIVA VICE

Name of Examiners: **Signature with date**

1. Dr Abhinsp
2. Mahesh Kumar M

PRINCIPAL
Guru Nanak Dev Engg. College

SUNSHINE HOSPITALS | Gachibowli

CERTIFICATE OF INTERNSHIP

Date: 19.05.2022

To

The Principal,

Guru Nank Dev Engineering College,

Mailoor Road,

Bidar.

Sir,

Sub: Project Training during 26.03.2022 to 07.05.2022.

Ref:- Your College Letter Dated 26.03.2022

With reference to your letter, we are allowing Kum., Suvarna, USN (3GN20BA043) A student MBA IV Semester of your college, to carry out project Internship (Training And Development) Training in our Hospital for a Period w.e.f 26.03.2022 to 07.05.2022.

We wish you all the best in your future endeavors.

For SUNSHINE HOSPITALS

(A Unit of RAJYALAKSHMI Health Care Pvt. Ltd.)

19/05/2022

Authorised Signatory

Human Resources

Sunshine Hospitals
A Unit of Rajyalakshmi Healthcare Private Limited
CIN: U85100TG2015PTC099232
Raidurgam, Gachibowli, Hyderabad, Telangana - 500 032
Phone: 040 4455 0000 | Emergency: 8008 108 108
Email: info@sunshinehospitals.com | Web: sunshinehospitals.com

PRINCIPAL
Guru Nanak Dev Engg. College, Bidar

it's warm in here

EXECUTIVE SUMMARY:

Sunshine Hospitals is promoted by globally rumoured consolidated substitute Specialist Dr. AV Gurava Reddy. found in may 2009, Daylight developed rapidly and 'subsequently become one of the top Medical clinics in Hyderabad Daylight has now turned into the second greatest shared replacement Community in south East Asia as patients from to the extent that Canada, USA, Sri Lanka, Bangladesh, Iran, and greater part of the African nations are being treated here.

Objective of the study:

- To know the on the work training.
- To know the barriers to training and development.

Limitation of the study:

- Respondents may be hesitated
- Deficiency of time and some associated resources not directly affect the inspectionprocedure.

Findings:

- The effective training more respondents is excellent.
- The employees are said ideal of training is immediate after the training.

Suggestions:

- The training session will be on time.
- All doubts should be clearing.

PRINCIPAL
Guru Nanak Dev Engg. College, Bidar

GURU NANAK DEV ENGINEERING COLLEGE, BIDAR

DEPARTMENT OF MBA

CERTIFICATE

This is to certify that **Miss. SUVARNA** bearing **USN: 3GN20BA044** is a Bonafide student of **Master of Business Administration** course of the Institute **(2020-2022)**, affiliated to Visvesvaraya Technological University, Belagavi. Project report on **"RECRUITMENT AND SELECTION"** at **"RAINBOW HOSPITAL HYDERABAD"** is prepared by her under the guidance of **PROF. JYOTI AINAPUR**, in partial fulfillment of the requirements for the award of the degree of Master of Business Administration of Visvesvaraya Technological University, Belagavi Karnataka.

Prof. Jyoti Ainapur	**Prof. Jyoti Ainapur**	**Dr. Dhananjay D Muktedar**
(Internal guide)	Head of the Department Master of Business Administration G.N.D.Engg. College, BIDAR-585403 (KARNATAKA)	PRINCIPAL Guru Nanak Dev Engg. College BIDAR

EXTERNAL VIVA-VOCE

NAME OF THE EXAMINERS:	**SIGNATURE WITH DATE**
1. Dr. Ashwin Kumar	10/8/22
2. Prof. Jyoti Ainapur	

PRINCIPAL
Guru Nanak Dev Engg. College, Bidar

Rainbow® Children's Hospital | BirthRight

Date: 24-05-2022

Subject: Completion of Internship posting

Dear Sir/Madam,

This letter is to confirm that **Ms. Suvarna Gandge** successfully completed her internship at Rainbow Children's Hospital, Banjara Hills, Hyderabad, from 04th Apr, 2022 to 24th May 2022 in Human Resource department.

During her tenure, we found her to be at the best of her conduct and we wish her all the best for her future endeavors.

For Rainbow Children's Hospital

For

Rahul Shah
Human Resources

Rainbow Children's Medicare Limited Banjara Hills, HR. Hyderabad

PRINCIPAL
Guru Nanak Dev Engg. College, Bidar

EXECUTIVE SUMMARY:

The Rainbow hospital founder is Dr Ramesh Kancharla in 1999. It absolutely was also the primary amongst the private children's hospitals in India to urge NABH accredation the team of doctors at all paramedtical staff is extremely Skilled and Experinced in their own respection fields. There are more than 1500 Beds altogether the situation across the Pan India.

During this specializing in Pedietrics and Material Health care Services. This hospital is coming in Top 10 Hospitals. This Hospital Private limited hospital. This Hospital is taken most of the Awards are taken. During this Hospital most of indiduals working in different Department. During this Hospital 720 and more peoples are working in this Hospital. This Hospital is one among the Pioneer and also the most reputable company in field of bioscience in India.

PRINCIPAL
Guru Nanak Dev Engg. College, Bidar

GURU NANAK DEV ENGINEERING COLLEGE, BIDAR

DEPARTMENT OF MBA

CERTIFICATE

This is to certify that **Ms. SWATI** bearing **USN:3GN20BA045** is a Bonafide student of Master of Business Administration course of the Institute (2020-2022), affiliated to Visvesvaraya Technological University, Belagavi. Project report on **"EMPLOYEE WELFARE MEASURES"** is prepared by her under the guidance of **PROF. KALYANRAO. K.**, in partial fulfillment of the requirements for the award of the degree of Master of Business Administration of Visvesvaraya Technological University, Belagavi Karnataka.

Prof. Kalyanrao. K. (Internal Guide)	**Prof. Jyoti ainapur** **(HOD MBA)**	**DR. Dhananajay D Muktedar** **(Principal)** PRINCIPAL Guru Nanak Dev Engg. College BIDAR

EXTERNAL VIVA-VOCE

Name of the Examiners:	**Signature with Date**
1. Amrenath N.K GNDEC Bidar	9/11/22
2. Kalyanrao .K.	9/11/22

Scanned with CamScanner

PRINCIPAL
Guru Nanak Dev Engg. College, Bidar

ಬೀದರ ಸಹಕಾರ ಸಕ್ಕರೆ ಕಾರ್ಖಾನೆ ನಿಯಮಿತ,
ಹಳ್ಳಿಖೇಡ (ಸ.ಕಾ.) ತಾ॥ ಹುಮನಾಬಾದ ಜಿ॥ ಬೀದರ-585 415 ಕರ್ನಾಟಕ ರಾಜ್ಯ
THE BIDAR SAHAKAR SAKKARE KARKHANE LTD.,
HALLIKED (S.F.), Tq. Humnabad Dist. Bidar-585 415 Karnataka State
Reg. No. 1903/RCS/1961, Email: bsskltd2012@gmail.com, web: bsskltdbidar.com
Ph.: 08483-274778, 274427, Mob.: 9035039652
GSTIN: 29AAAAB0378F1ZY

N/21-04-21

ಉಲ್ಲೇಖ ಸಂಖ್ಯೆ : ಬಿ.ಸ.ಸ.ಕಾ./Ref No. BSSK/ EST/1/48/1995-96/P.IX/ 8616

ದಿನಾಂಕ: /Date: 15-07-2022

CERTIFICATE

This is to certify that **Ms.Swati Devidas MBA,** USN NO:3GN20BA045 Student of Guru Nanak Dev Engineering College Bidar, has Successfully completed her study in our organisation on her given subject about **"Employee Welfare measure"** with relevant details guided by our Karkhane officials with in the permitted period of six weeks from 07-05-2022 to 18-06-2022.

Managing Director,
BSSK Ltd, Hallikhed(SF)

BIDAR SAHAKARA SAKKARE KARKHANE LTD. BIDAR HALLIKHED (SF)

PRINCIPAL
Guru Nanak Dev Engg. College, Bidar

Scanned with CamScanner

EXECUTIVE SUIMARY

The project report title "EMPLOYEE WELFARE MEASURE" has conducted in B.S.S.K Ltd. Hallikhed. To understand the employee's performance the company has conducted employee welfare measure hence this topic is analyzing that after employee welfare measure whether employees were increasing their skill or whether they increasing working efficiency to know this topic is chosen.

PRINCIPAL
Guru Nanak Dev Engg. College, Bidar

GURU NANAK DEV ENGINEERING COLLEGE, BIDAR

DEPARTMENT OF MBA

CERTIFICATE

This is to certify that **MISS. SWATI** bearing **USN: 3GN20BA046** is a BonafideStudent of Master of Business Administration course of the institute (2020-2022). Affiliated to Visvesvaraya Technological University, Belagavi. Project report on **"EMPLOYEE ENGAGMENT"** at **"BIDAR KISSAN SHAKKAR KARKHANA LTD BIDAR"** is prepared by her under guidance of **PROF. KALYANRAO K**, in partial fulfillment of the requirements for the award of thedegree of Master of Business Administration of Visvesvaraya Technological University, Belagavi Karnataka.

Prof. KALYANRAO K	Prof. JYOTI AINAPUR	Dr. DHANANJAY D MUKTEDAR
(INTERNAL GUIDE)	(HOD)	(PRINCIPAL)
	Head of the Department Master of Busines Administration G.N.D.Engg.College,BIDAR-585403 (KARNATAKA)	PRINCIPAL Guru Nanak Dev Engg. College BIDAR

EXTERNAL VIVA-VOCE

NAME OF THE EXAMINERS	SIGNATURE WITH DATE
1. Amarnath. N. K CHEC, Bidar	
2 Kalyanrao. K	9/11/22

PRINCIPAL
Guru Nanak Dev Engg. College, Bidar

Bidar Kissan Shakhar Karkhana Limited

Factory Site : Village Mogdal, National Highway No. 9, Taluk & Dist : Bidar, Karnataka
Regd. Off : Village Mogdal, Post Markunda, Taluk & Dist : Bidar, Pin-585 227, Karnataka
Cell : 9620220113/ 9620220116, Email : bidarksklmogdal@gmail.com

TIN No. : 29AAECB0672N1ZC CIN : U15429KA2000PLC026372

No.: Date : 4/07/22

BKSKL/Adm/2022

To,

The principal

Guru Nanak Dev Engineering College

Bidar, Karnataka.

Sub: Permission for Internship Reg.

Ref: Your College letter dated 26/03/2022

With Reference to the above cited subject we are hereby permitting Miss. SWATI bearing USN NO: 3GN20BA046 MBA 4th semester student of your college to, undergo internship training in our organization for six weeks i.e. from 26-03-2022 to 07-05-2022

Thanking you

Yours Sincerely

GM (Admin)

BKSK Ltd. Mogdal

Bidar Kissan Shakkar Karkhana Ltd. MOGDAL

PRINCIPAL
Guru Nanak Dev Engg. College, Bidar

Executive summary

The tittle of the project "BIDAR KISSAN SHAKKAR KARKHANA LTD" A study of employee engagement is a dedication level of their work towards their job and attempt understand the opinion.

The search project is the total study of employee engagement employee engagement is an attempt to understand the opinion attitudes of the various categories of employee of THE BIDAR KISSAN SHAKKAR KARKHANA LTD. It is also aims to know and study obstacles in the proper delegation and increase the effectiveness of employee engagement.

Bidar Kissan Shakhar Karkhana Limited (BKSKL) is a company incorporated in Karnataka under the Companies Act, 1956, with the certificate of incorporation number U15429KA2000PLCO26372 dated 11-02-2000.

Bidar Kissan Shakhar Karkhana Limited (BKSKL) is a public limited company that specializes in bidar kissan shakhar karkhana.

the production of sugar BKSKL is located in Modal village, Bidar Taluk and District, Karnataka.

PRINCIPAL
Guru Nanak Dev Engg. College, Bidar

GURU NANAK DEV ENGINEERING COLLEGE, BIDAR

DEPARTMENT OF MBA

CERTIFICATE

This is to certify that **Miss. SWATIKAA** being **USN: 3GN20BA047** is a Bonafide student of Master of Business Administration course of the Institute 2020-22, affiliated to Visvesvaraya Technological University, Belagavi. Project report on **"EMPLOYEE ENGAGEMENT AT BHALKESHWAR SUGAR LTD."** is prepared by her under the guidance of **Prof. MAHESH KUMAR M.** in partial fulfillment of the requirements for the award of the degree of Master Business Administration of Visvesvaraya Technological University, Belagavi Karnataka.

Prof. MAHESH KUMAR M	Prof. Jyoti Ainapur	Dr. Dhananjay D Muktedar
(Internal Guide)	Head of the Department Master of Busines Administration G.N.D.Engg. College, BIDAR-585403 (KARNATAKA)	PRINCIPAL (PRINCIPAL) Guru Nanak Dev Engg College BIDAR

EXTERNAL VIVA-VOICE

NAME OF THE EXAMINER:	SINGATURE WITH DATE
1 Dr. Abhrin	10/11/
2 Prof. Mahesh Kumar. M	10/11/2022

PRINCIPAL
Guru Nanak Dev Engg. College, Bidar