PERSPICACIOUS OCTAPOD

A PROJECT REPORT

Submitted in partial fulfillment of requirement
for the degree of

Bachelor of Engineering
In
Electronics & Telecommunication

Submitted by

DEVAHARSHA M(B120953041)

MANISH PANDA(B120953040)

NISHANT RAMAKURU(B120953053)

Under the Guidance of

PROF. ASHVINI KULKARNI

DEPARTMENT OF ELECTRONICS AND TELECOMMUNICATION

INTERNATIONAL INSTITUTE OF INFORMATION TECHNOLOGY,

SAVITRIBAI PHULE PUNE UNIVERSITY

HINJAWADI, PUNE(MH)-411057

JUNE 2018

CERTIFICATE

DEPARTMENT OF ELECTRONICS AND TELECOMMUNICATION

INTERNATIONAL INSTITUTE OF INFORMATION TECHNOLOGY,

HINJAWADI, PUNE-411057

This is to certify that

DEVAHARSHA M(B120953041)

MANISH PANDA(B120953040)

NISHANT RAMAKURU(B120953053)

Class: BE(E&TC) have satisfactorily completed Project titled, '**PERSPICACIOUS OCTAPOD**' under my supervision as a part of Bachelor of Engineering in **Electronics and Telecommunication(2017-2018)** of Savitribai Phule Pune University.

Prof. Ashvini kulkarni — Dr. S. Mohan Mahalakshmi Naidu

Project Guide — HOD(E&TC)

Principal

Place : Pune — External Examiner

Date :

Abstract

Many inventions came up in the history of science and technology. Among them, the invention of robots is drastically emerging. Speed and economic advantages in daily life has increased the use of robots. A robot is an electro-mechanical system which can do autonomous or pre-programmed tasks. When wheels have dominated the robot world and seem extremely popular, innovators are struggling to find a decent replacement for wheels which would work in any kind of an environment. Adding legs to robots would be a solution for robots which runs on unprepared terrain. Now arises the problem of stability.

To overcome this, we propose a self-learning smart spider robot that functions without human interfacing. The legged robot inspired by spider is developed with the control mechanism and machine learning algorithms which results in the execution of various walking behaviour by adapting itself. The effectiveness of the robot is measured according to the performance on rough terrain through eight legs. Control of robot is provided via communication port on computer. Functional algorithms are built for flexible motion against different conditions such as rough terrain, pit. Due to machine learning there will be no bounds for the robot in the near future it will learn to adapt as well as grow mentally as time goes by.The bot when placed in a maze, the ultrasonic sensors will return a value that is the distance of an obstacle in the line of sight of the sensor, based on the position of the octapod with respect to the walls of the maze it will negate the positions and will keep searching for the exit based on the algorithms and machine learning modules used.

Contents

Certificate i

Abstract ii

Contents iii

List of Figures vi

List of Tables viii

1 Introduction 1

1.1 Research Approach 1

1.2 Intent 2

2 Literature Survey 3

2.1 Emergence 3

2.2 Biological Inspirations 4

2.3 Behaviour Based 4

2.4 Mapping and Exploration 5

3 Proposed Methodology 6

3.1 Problem Statement 6

3.2 Block Diagram 6

3.3 Elucidation 7

4 Project Enumeration **10**

4.1 Hardware Description 10

4.1.1 Arduino Mega 10

4.1.2 Servo Motor 11

4.1.3 ESP8266 WiFi Module 15

4.1.4 Ultrasonic Sensor 17

4.1.5 Battery 19

4.1.6 MakerBot Replicator 2X 22

4.2 Software Description 22

4.2.1 Arduino IDE 22

4.2.2 Spyder 23

4.2.3 Autodesk Inventor 3D 24

4.2.4 MakerBot Print 24

5 Cognition **25**

5.1 Designs 25

5.1.1 Femur 25

5.1.2 Tibia 26

5.1.3 Coxa 26

5.1.4 Adapter 27

5.1.5 Body 27

5.1.6 Leg 28

5.2 Algorithms 28

5.2.1 Random mouse algorithm 28

5.2.2 Trmaux's algorithm 28

5.2.3 Stratagem 31

6 Results and Conclusion **32**

6.1 Connection to server 32

6.2 Ultrasonic sensor data on server 33

6.3 Data retrieval from server 33
6.4 Octapod 33
6.5 Conclusion 34

7 Future Scope **35**

References **35**

List of Figures

3.1 Block Diagram. 6
3.2 Diagramatic design of Body. 7
3.3 Parts of a leg. 8
3.4 Leg structure and it's movement. 8

4.1 Arduino Mega. 10
4.2 Servo mechanism. 13
4.3 SG90 Servo Motor. 14
4.4 SG90 Servo Motor Graph. 14
4.5 ESP8266 NodeMCU WiFi Module. 16
4.6 ESP8266 NodeMCU WiFi Module Pin Out. 16
4.7 Diagram of the basic ultrasonic sensor operation. 17
4.8 HC-SR04. 18
4.9 Lithium-ion 9v battery. 20
4.10 Lithium-Polymer battery. 21
4.11 MakerBot Replicator 2 Desktop 3D Printer. 22

5.1 Design of Femur. 26
5.2 Design of Tibia. 26
5.3 Design of Coxa. 26
5.4 Design of SG90 Adapter. 27
5.5 Design of Body. 27
5.6 Design of Leg. 28
5.7 Rule 1. 29

5.8 Rule 2. 29
5.9 Rule 3. 29
5.10 Rule 4. 30
5.11 Trmaux Algorithm. 30

6.1 Connection to server. 32
6.2 Ultrasonic sensor data on server. 33
6.3 Data retrieval from server. 33
6.4 Octapod. 34

List of Tables

4.1 Arduino Mega 2560 11
4.2 Motor Connections 14
4.3 SG90 Specifications 15
4.4 ESP8266 Specifications 17
4.5 HC-SR04 Connections 19
4.6 HC-SR04 Specifications 19
4.7 Li-ion battery Specifications 20
4.8 Li-Po battery Specifications 21

Chapter 1

Introduction

1.1 Research Approach

Enormous numbers of publications and papers in years back noted an important point that approximately 50 percent of the earths land surface is inaccessible to wheeled vehicles. Though, most animals can cross rough terrain in an efficient and fairly rapid fashion. Thus, it is desirable to create legged machine bots that will imitate the excellent mobility of animals. In order to realize universal 8-legged walking of just as creatural spiders and adapt to environments, this project is concerned with cooperative walking control for a spider-type robot and clearing mazes without any human interaction. At first, we examine how a spider walks on the floor to ascertain its gait. Second, a spider-type robot which is possible to walk by 8-legs is made experimentally. And using our trial robot, we perform walking experiments to check whether various walking types are possible. The walking types are forward, back, diagonal, revolution and R-advance. Next, we observe whether a spider reacts well to the environment and then how a spider walks. A creatural spider responds to environmental information by adapting various walking forms, in cases of escaping from natural enemies or fear, wandering around for hunting game and so on.

1.2 Intent

Important developments have been occurred in the history of science and technology. Among them, the concept and applications of robots with each passing year are a larger place. Speed and economic advantages in daily life and industrial applications have increased the use of robots day by day. The robot is an electromechanical system which is capable of autonomous or preprogrammed tasks. Robots independently can also operate under the control of a computer program such as can be directly operated by operator. Eight-legged robots can be used as search and rescue robots, space robots and discover robots. In these fields, octapod present opportunities as having small size and practical mobility. When viewed from this perspective, eight-legged walking robot can be easily scroll by produced algorithms in all types of terrain is an advantage. The acceptable number of legs and the ability to move provide more controlled balance to the robot when compared to the majority of multi-legged robots. Maze-solving although artificial in terms of the confine that the robot it subjected to is a structured technique and controlled implementation of autonomous navigation which is sometimes preferable in studying specific aspect of the problem [1].

Chapter 2

Literature Survey

The young and dynamically growing field of cooperative and cognitive robotics has become a diverse research area that often seems to go in several different directions at once. Areas of interest range from high-level human-interactive robots [2] to biologically inspired autonomous gnat-like agents [4]. In the past fifteen years many different research areas have emerged, each generating significant amounts of progress. However, the field is so new that no topic area within cognitive robotics can be considered mature. This chapter introduces the key areas of research within the field of robotics which are Biological Inspirations, Behaviour-Based Robotics, Mapping and Exploration.

2.1 Emergence

Cognitive robotics is concerned with endowing a robot with intelligent behaviour by providing it with a processing architecture that will allow it to learn and reason about how to behave in response to complex goals in a complex world. Cognitive robotics may be considered the engineering branch of embodied cognitive science and embodied embedded cognition.

Cognitive robotics views animal cognition as a starting point for the development of robotic information processing, as opposed to more traditional Artificial Intelligence techniques. Target robotic cognitive capabilities include perception processing, atten-

tion allocation, anticipation, planning, complex motor coordination, reasoning about other agents and perhaps even about their own mental states. Robotic cognition embodies the behaviour of intelligent agents in the physical world (or a virtual world, in the case of simulated cognitive robotics). Ultimately the robot must be able to act in the real world.

2.2 Biological Inspirations

There are numerous examples of biological societies that achieve collective tasks. Many researchers in the field of cooperative robotics have attempted to mimic in robots the behaviours observed in these societies. Replicating the behaviours of various biological societies has led to an entire field of research known as behaviour-based robotics.

Kube and Zhang [3] define a list of five biologically inspired mechanisms for invoking group behaviour: non-interference, following, responding to environmental cues, group realization, and auto-stimulation. Many insects use the environmental cue of sunlight to begin foraging tasks at dawn. In a like manner, the environmental cue of a fire could invoke a group of robots to begin fire fighting tasks. Many insects use a group realization mechanism as a trigger to perform different tasks depending on their proximity to the rest of the group.

2.3 Behaviour Based

Behaviour is a biologically inspired term defined as a regularity in the interaction of a robot with its environment [5] . Behaviours need not be complex; as Kube and Zhang [3] observe, many behaviours can be realized in combinational circuits. Examples of 15 simple behaviours include wandering and obstacle avoidance. In a typical robot system,behaviours are embedded in the control architecture and are intended as building blocks for achieving higher-level goals. In multi-robot systems, the simple and complex behaviours of each robot are combined to form a group behaviour that is both new and desirable [6]. To make this point clear, consider two robots that

have the task of pushing a box from point A to point B. One robot is a pusher and the other is a steerer. Notice that this is a heterogeneous, intentional cooperation approach. On a single robot level, the pusher will have a contact behaviour that will keep it in contact with the box and a drive behaviour that will keep it in forward motion. Taken individually, these behaviours accomplish nothing, but when combined the robot will push a box. Likewise, the steerer will have a homing behaviour to get to point B and some behaviour to keep the box between itself and point B. On the multi-robot level, the pushing and steering behaviours of each robot are useless when acting alone; but when combined, the task is accomplished.

2.4 Mapping and Exploration

Exploration can be a time-consuming part of many cooperative tasks and, quite often, time is of great importance (i.e. search-and-rescue). Therefore, it is important in multi-legged robot approaches to ensure that additional robots enhance the time for exploration over a single robot approach [7]. One may assume that the addition of robots inevitably speeds up an exploration task. However, without coordination all robots might follow the same path and require the same amount of time as a single robot. Even worse, interference between robots may cause the exploration to take more time than with a single robot. Therefore, a key problem in multi-robot exploration is to cause the robots to simultaneously explore different areas of the environment.

The next level of complexity in multi-robot exploration involves the development of some form of a shared map that tells not only where robots are, but where they have been. Most of the work in multi-robot exploration deals with map-building of two dimensional environments and use either range sensors (such as sonar and laser) or camera vision [8]. Another popular area of research that coincides with mapping and exploration is localization. Localization deals with the ability of a robot to determine its location based on information such as nearby landmarks and maps.

Chapter 3

Proposed Methodology

3.1 Problem Statement

Design an eight legged machine which is self-learning i.e capable of gaining stability and clearing mazes on its own.

3.2 Block Diagram

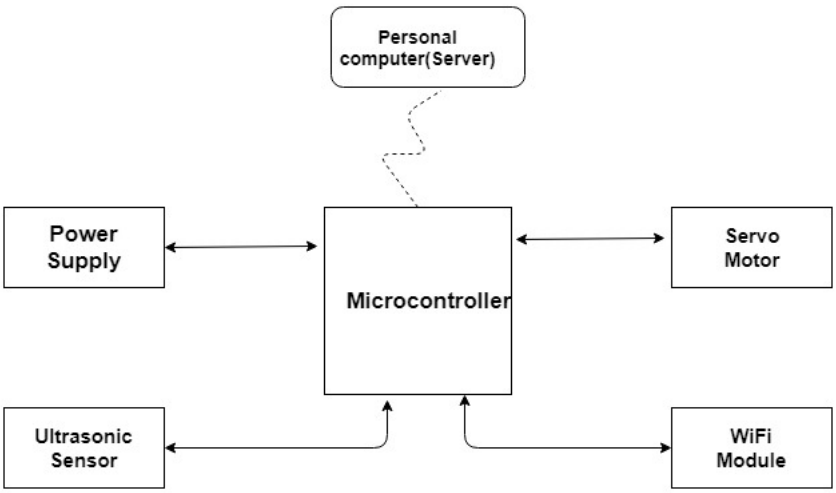

Figure 3.1: Block Diagram.

3.3 Elucidation

We propose a self-learning smart spider robot that functions without human interfacing. The legged robot inspired by spider is developed with the control mechanism and machine learning algorithms which results in the execution of various walking behaviour by adapting itself. The effectiveness of the robot is measured according to the performance on rough terrain through eight legs. Control of robot is provided via communication port on computer. Functional algorithms are built for flexible motion against different conditions such as rough terrain, pit. Due to machine learning there will be no bounds for the robot in the near future it will learn to adapt as well as grow mentally as time goes by.

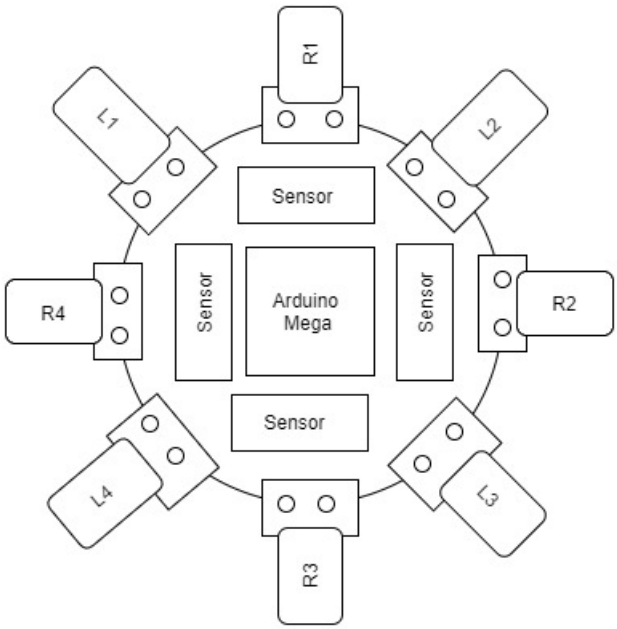

Figure 3.2: Diagramatic design of Body.

The bot will be having eight legs [10] and the legs will gain stability using the concept of centre of gravity. Each leg would be comprising of three servo motors which will control the leg taking in the consideration of angle. Four ultrasonic sensors are placed in four different directions which will be measuring front, backward and sideways value for crash and obstacle avoidance.

Each leg of the robot exhibits same mechanical behaviour. The leg portion is divided into three parts which are coxa, femur and tibia. The coxa attaches to the

body, the femur to the coxa and the tibia to the femur, each through a motor powered hinge joint giving each leg three degrees of freedom (DOF).

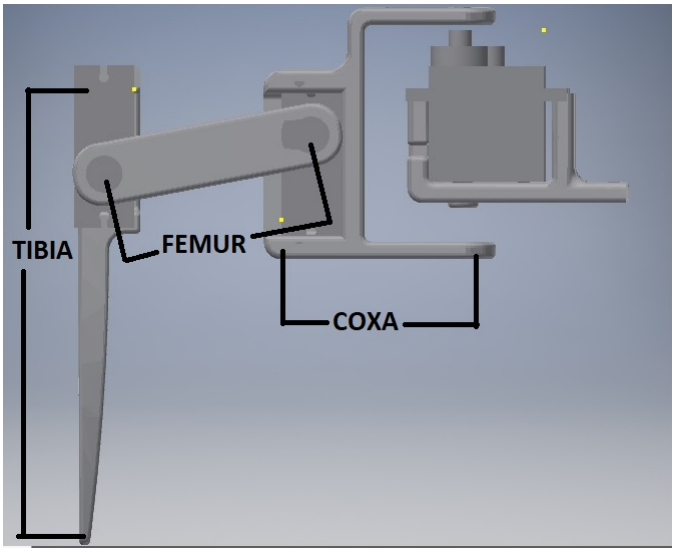

Figure 3.3: Parts of a leg.

The articulated body is at the desired position when the joints are moved to the calculated joint angles. A change in joint angle, or more specifically, a change in the angular velocity of the joint results from the application of a torque either by a muscle or a motor. The control of motion is exerted by the control of the torque applied to the joints.

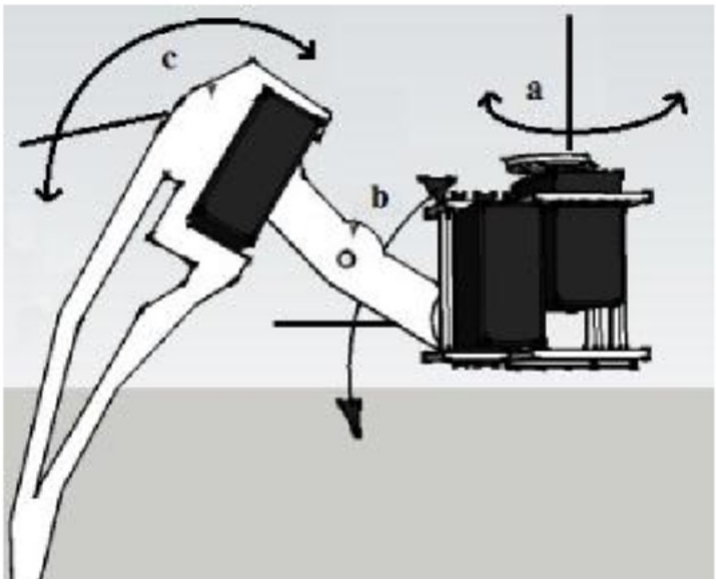

Figure 3.4: Leg structure and it's movement.

As shown in the figure, the first motor from right showing "a" rotation will be

rotating from left to right and vice versa covering angles 0 degrees to 180 degrees and vice versa. The second motor showing "b" rotation will be moving from top to bottom and vice versa covering angles like the first motor. The third motor showing "c" rotation will be covering angles like the other two motors [9]. The bot when placed in a maze, the ultrasonic sensors will return a value that is the distance of an obstacle in the line of sight of the sensor, based on the position of the octapod with respect to the walls of the maze it will negate the positions and will keep searching for the exit based on the algorithms and machine learning modules used.

Chapter 4

Project Enumeration

4.1 Hardware Description

4.1.1 Arduino Mega

Figure 4.1: Arduino Mega.

The Arduino Mega 2560 is a microcontroller board based on the ATmega2560 (datasheet). It has 54 digital input/output pins (of which 14 can be used as PWM outputs), 16 analog inputs, 4 UARTs (hardware serial ports), a 16 MHz crystal oscillator, a USB connection, a power jack, an ICSP header, and a reset button. It contains everything needed to support the microcontroller; simply connect it to a computer

Table 4.1: Arduino Mega 2560

Parameter	**Value**
Operating Voltage	5V
Input Voltage(recommended)	7-12V
Input Voltage(limit)	6-20V
Digital I/O pins	54
Analog Inputs	16
Flash Memory	128 KB of which 4 KB used by bootloader
SRAM	8 KB
EEPROM	4KB
Clock Speed	16 MHz
DC Current per I/O pins	40 mA
DC Current for 3.3V pin	50mA

with a USB cable or power it with a AC to-DC adapter or battery to get started [11].

The ATmega2560 has 256 KB of flash memory for storing code (of which 8 KB is used for the bootloader), 8 KB of SRAM and 4 KB of EEPROM (which can be read and written with the EEPROM library).

4.1.2 Servo Motor

What is a Servo Motor?

A servo motor is an electrical device which can push or rotate an object with great precision. If you want to rotate and object at some specific angles or distance, then you use servo motor. It is just made up of simple motor which run through servo mechanism. If motor is used is DC powered then it is called DC servo motor, and if it is AC powered motor then it is called AC servo motor. We can get a very high torque servo motor in a small and light weight packages. Doe to these features they are being used in many applications like toy car, RC helicopters and planes, Robotics, Machine etc [12]. Servo motors are rated in kg/cm (kilogram per centimeter) most hobby servo motors are rated at 3kg/cm or 6kg/cm or 12kg/cm. This kg/cm tells you how much weight your servo motor can lift at a particular distance. For example: A 6kg/cm Servo motor should be able to lift 6kg if the load is suspended 1cm away from the motors shaft, the greater the distance the lesser the weight carrying capacity. The

position of a servo motor is decided by electrical pulse and its circuitry is placed beside the motor.

Mechanism

It consists of three parts:

1. Controlled device
2. Output sensor
3. Feedback system

It is a closed loop system where it uses positive feedback system to control motion and final position of the shaft. Here the device is controlled by a feedback signal generated by comparing output signal and reference input signal [12].

Here reference input signal is compared to reference output signal and the third signal is produces by feedback system. And this third signal acts as input signal to control device. This signal is present as long as feedback signal is generated or there is difference between reference input signal and reference output signal. So, the main task of servomechanism is to maintain output of a system at desired value at presence of noises.

Controlling Servo Motor

Servo motor is controlled by PWM (Pulse with Modulation) which is provided by the control wires. There is a minimum pulse, a maximum pulse and a repetition rate. Servo motor can turn 90 degree from either direction form its neutral position. The servo motor expects to see a pulse every 20 milliseconds (ms) and the length of the pulse will determine how far the motor turns. For example, a 1.5ms pulse will make the motor turn to the 90 position, such as if pulse is shorter than 1.5ms shaft moves to 0 and if it is longer than 1.5ms than it will turn the servo to 180 [12].

Servo motor works on PWM (Pulse width modulation) principle, means its angle of rotation is controlled by the duration of applied pulse to its Control PIN. Basically

servo motor is made up of DC motor which is controlled by a variable resistor (potentiometer) and some gears. High speed force of DC motor is converted into torque by Gears. We know that WORK= FORCE X DISTANCE, in DC motor Force is less and distance (speed) is high and in Servo, force is High and distance is less. Potentiometer is connected to the output shaft of the Servo, to calculate the angle and stop the DC motor on required angle [12].

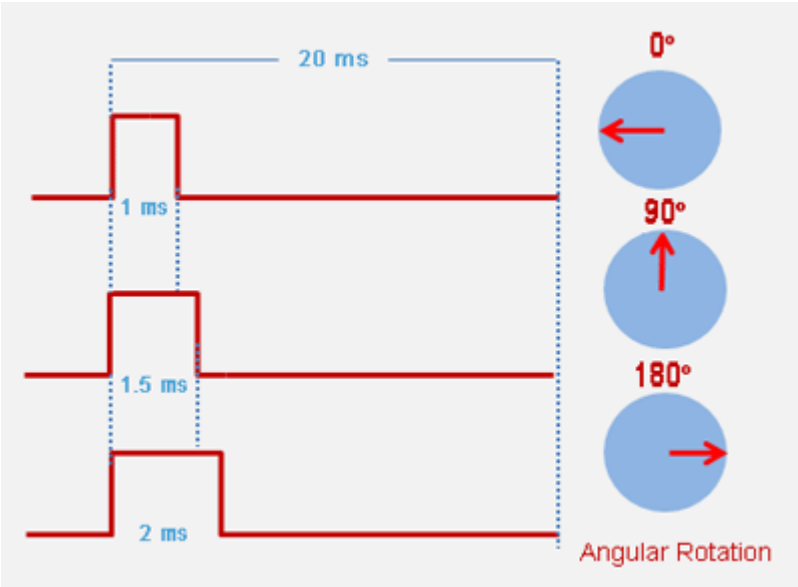

Figure 4.2: Servo mechanism.

Servo motor can be rotated from 0 to 180 degree, but it can go up to 210 degree, depending on the manufacturing. This degree of rotation can be controlled by applying the Electrical Pulse of proper width, to its Control pin. Servo checks the pulse in every 20 milliseconds. Pulse of 1 ms (1 millisecond) width can rotate servo to 0 degree, 1.5ms can rotate to 90 degree (neutral position) and 2 ms pulse can rotate it to 180 degree [12]. All servo motors work directly with your +5V supply rails but we have to be careful on the amount of current the motor would consume, if you are planning to use more than two servo motors a proper servo shield should be designed.

SG90

Figure 4.3: SG90 Servo Motor.

Tiny and lightweight with high output power. Servo can rotate approximately 180 degrees(90 in each direction), and works just like the standard kinds but smaller. You can use any servo code, hardware or library to control these servos. Good for beginners who want to make stuff move without building a motor controller with feedback and gear box, especially since it will fit in small places. It comes with a 3 horns (arms) and hardware.

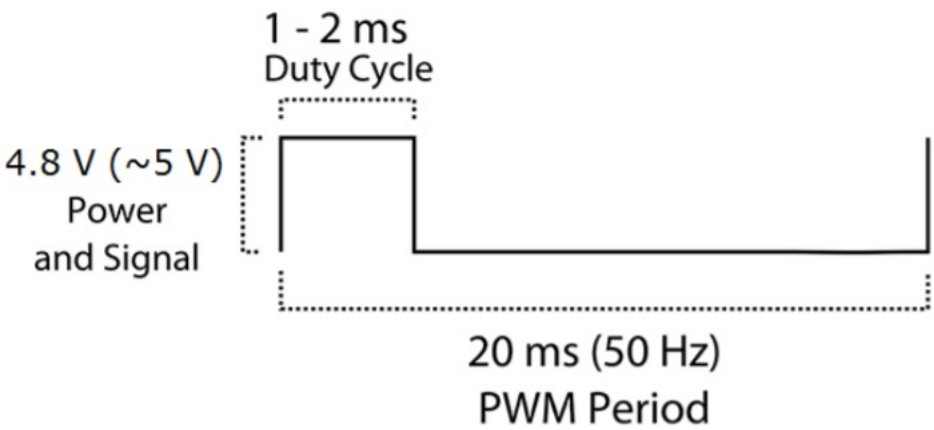

Figure 4.4: SG90 Servo Motor Graph.

Table 4.2: Motor Connections

Wire Color	**Connection**
Yellow	PWM
Red	Supply
Brown	Ground

Table 4.3: SG90 Specifications

Pulse Width	500μs-2400μs
Rotation/Support	Brushing
Shaft Diameter	4.5 mm
Weight	32 oz(9.0 g)
Speed	0.1 s/60 degree
Torque	1.8 Kg-cm
Gear Type	Plastic
Modulation	Analog
Motor Type	3 pole servo motor
Range	180°
Phase Voltage	5V

4.1.3 ESP8266 WiFi Module

The ESP8266 is a low-cost Wi-Fi microchip with full TCP/IP stack and microcontroller capability produced by Shanghai-based Chinese manufacturer, Espressif Systems. The chip first came to the attention of western makers in August 2014 with the ESP-01 module, made by a third-party manufacturer, Ai-Thinker. This small module allows microcontrollers to connect to a Wi-Fi network and make simple TCP/IP connections using Hayes-style commands. However, at the time there was almost no English-language documentation on the chip and the commands it accepted. The very low price and the fact that there were very few external components on the module which suggested that it could eventually be very inexpensive in volume, attracted many hackers to explore the module, chip, and the software on it, as well as to translate the Chinese documentation. The ESP8285 is an ESP8266 with 1 MiB of built-in flash, allowing for single-chip devices capable of connecting to Wi-Fi [22]. This module has a powerful enough on-board processing and storage capability that allows it to be integrated with the sensors and other application specific devices through its GPIOs with minimal development up-front and minimal loading during runtime. Its high degree of on-chip integration allows for minimal external circuitry, including the front-end module, is designed to occupy minimal PCB area. The ESP8266 supports APSD for VoIP applications and Bluetooth co-existance interfaces, it contains a self-calibrated RF allowing it to work under all operating conditions, and requires no external RF

parts [22].

ESP8266 NodeMCU

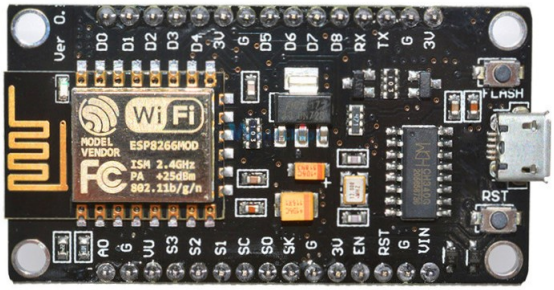

Figure 4.5: ESP8266 NodeMCU WiFi Module.

NodeMCU is an open source IoT platform. It includes firmware which runs on the ESP8266 Wi-Fi SoC from Espressif Systems, and hardware which is based on the ESP-12 module. The term "NodeMCU" by default refers to the firmware rather than the development kits. The firmware uses the Lua scripting language. It is based on the eLua project, and built on the Espressif Non-OS SDK for ESP8266. It uses many open source projects, such as lua-cjson, and spiffs [21].

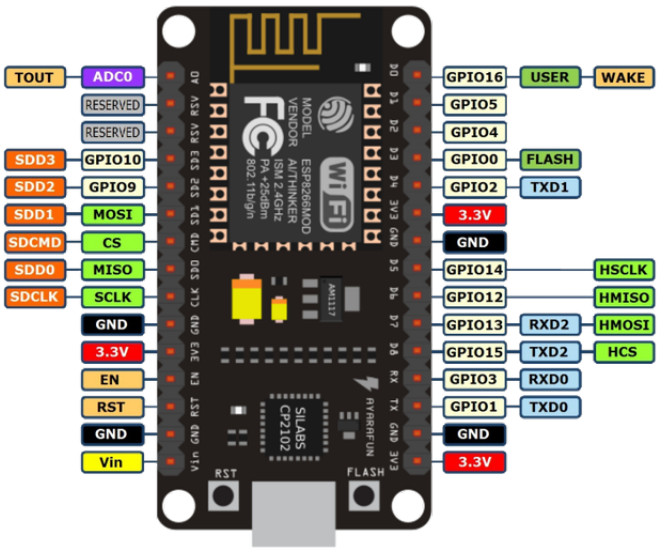

Figure 4.6: ESP8266 NodeMCU WiFi Module Pin Out.

Table 4.4: ESP8266 Specifications

Module	ESP8266 NodeMCU E-12
Wireless criteria	802.11 b / g / n
Memory	128kBytes
Storage	4MBytes
Communication interface voltage	3.3V
Protocol	Integrated TCP or IP protocol stack

4.1.4 Ultrasonic Sensor

What is an Ultrasonic Sensor?

An Ultrasonic sensor is a device that can measure the distance to an object by using sound waves. It measures distance by sending out a sound wave at a specific frequency and listening for that sound wave to bounce back. By recording the elapsed time between the sound wave being generated and the sound wave bouncing back, it is possible to calculate the distance between the sonar sensor and the object [13].

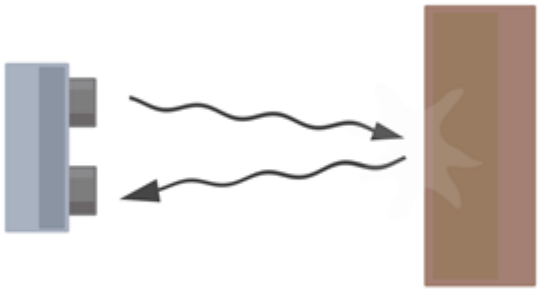

Figure 4.7: Diagram of the basic ultrasonic sensor operation.

Since it is known that sound travels through air at about 344 m/s (1129 ft/s), you can take the time for the sound wave to return and multiply it by 344 meters (or 1129 feet) to find the total round-trip distance of the sound wave. Round-trip means that the sound wave travelled 2 times the distance to the object before it was detected by the sensor; it includes the 'trip' from the sonar sensor to the object AND the 'trip' from the object to the Ultrasonic sensor (after the sound wave bounced off the object). To find the distance to the object, simply divide the round-trip distance in half.

$$Distance = \frac{Speedofsound * Timetaken}{2} \tag{4.1}$$

It is important to understand that some objects might not be detected by ultrasonic sensors. This is because some objects are shaped or positioned in such a way that the sound wave bounces off the object, but are deflected away from the Ultrasonic sensor. It is also possible for the object to be too small to reflect enough of the sound wave back to the sensor to be detected. Other objects can absorb the sound wave all together (cloth, carpeting, etc), which means that there is no way for the sensor to detect them accurately. These are important factors to consider when designing and programming a robot using an ultrasonic sensor.

HC-SR04

HC-SR04 is an ultrasonic ranging module that provides 2 cm to 400 cm non-contact measurement function. The ranging accuracy can reach to 3mm and effectual angle is ¡ 15. It can be powered from a 5V power supply.

Figure 4.8: HC-SR04.

Ultrasonic ranging module HC - SR04 provides 2cm - 400cm non-contact measurement function, the ranging accuracy can reach to 3mm. The modules includes ultrasonic transmitters, receiver and control circuit. The basic principle of work:

1. Using IO trigger for at least 10us high level signal.

2. The Module automatically sends eight 40 kHz and detect whether there is a pulse signal back.

3. IF the signal back, through high level , time of high output IO duration is the time from sending ultrasonic to returning. Test distance = (high level timevelocity of sound (340M/S) / 2.

Table 4.5: HC-SR04 Connections

PIN Number	**Connection**
Pin 1	VCC
Pin 2	TRIG
Pin 3	ECHO
Pin 4	GND _EN

Table 4.6: HC-SR04 Specifications

Operating voltage	DC 5V
Operating Current	15mA
Operating Frequency	40Hz
Max Range	400cm
Min Range	2cm
Measuring Angle	15 degree
Trigger Input Signal	10μs TTL pulse
Echo Output Signal	Input TTL lever signal and the range in proportion
Dimension	45x20x15mm

4.1.5 Battery

Lithium-ion

A lithium-ion battery or Li-ion battery (abbreviated as LIB) is a type of rechargeable battery in which lithium ions move from the negative electrode to the positive electrode during discharge and back when charging. Li-ion batteries use an intercalated lithium compound as one electrode material, compared to the metallic lithium used in a non-rechargeable lithium battery. The electrolyte, which allows for ionic movement, and the two electrodes are the constituent components of a lithium-ion battery cell.

Lithium-ion batteries are common in home electronics. They are one of the most popular types of rechargeable batteries for portable electronics, with a high energy density, tiny memory effect and low self-discharge. LIBs are also growing in popularity for military, battery electric vehicle and aerospace applications. They're generally

much lighter than other types of rechargeable batteries of the same size. The electrodes of a lithium-ion battery are made of lightweight lithium and carbon. Lithium is also a highly reactive element, meaning that a lot of energy can be stored in its atomic bonds. This translates into a very high energy density for lithium-ion batteries. Here is a way to get a perspective on the energy density. A typical lithium-ion battery can store 150 watt-hours of electricity in 1 kilogram of battery. A NiMH (nickel-metal hydride) battery pack can store perhaps 100 watt-hours per kilogram, although 60 to 70 watt-hours might be more typical. A lead-acid battery can store only 25 watt-hours per kilogram. Using lead-acid technology, it takes 6 kilograms to store the same amount of energy that a 1 kilogram lithium-ion battery can handle.Lithium-ion batteries can handle hundreds of charge/discharge cycles.

Figure 4.9: Lithium-ion 9v battery.

Table 4.7: Li-ion battery Specifications

Model Number	9V 6F 22
Battery Type	Zinc Carbon
Nominal Voltage	9V
Battery Dimensions (mm)	26.5*48.5*17.5
Discharge Resistance()	620

Lithium-Polymer

A lithium polymer battery, or more correctly lithium-ion polymer battery (abbreviated as LiPo, LIP, Li-poly, lithium-poly and others), is a rechargeable battery of lithium-ion technology using a polymer electrolyte instead of a liquid electrolyte. High conductivity semisolid (gel) polymers form this electrolyte. These batteries provide higher specific energy than other lithium battery types and are used in applications where weight is a critical feature, like tablet computers, cellular telephone handsets and radio-controlled aircraft. The main advantages of LiPo battery cells are that they have about four times the energy of density of nickel cadmium or nickel metal hydride batteries. LiPo batteries are very lightweight and pliable, and can be made to almost any size or shape. They can be banged around, punctured, dropped or run over with a car and still not explode, making them more resistant to physical trauma than most batteries.

Figure 4.10: Lithium-Polymer battery.

Table 4.8: Li-Po battery Specifications

Brand	ZOP Power
Voltage rating	11.1V
Power rating	4500mAh
Size	135*44*26 mm
Weight	Approx 320g

4.1.6 MakerBot Replicator 2X

Figure 4.11: MakerBot Replicator 2 Desktop 3D Printer.

Alongside the Replicator 2, MakerBot also released the Replicator 2X. The 2X model was intended as an experimental version of the 2 that includes a completely enclosed build area, redesigned dual-extruders, and a heated aluminum build platform all of which enable printing with ABS plastic and dual-material printing [19].

4.2 Software Description

4.2.1 Arduino IDE

A program for Arduino may be written in any programming language for a compiler that produces binary machine code for the target processor. Atmel provides a development environment for their microcontrollers, AVR Studio and the newer Atmel Studio. The Arduino project provides the Arduino integrated development environment (IDE), which is a cross-platform application written in the programming language Java. It originated from the IDE for the languages Processing and Wiring. It includes a code editor with features such as text cutting and pasting, searching and replacing text, automatic indenting, brace matching, and syntax highlighting, and provides simple one-click mechanisms to compile and upload programs to an Arduino board. It also contains a message area, a text console, a toolbar with buttons for common functions

and a hierarchy of operation menus. The Arduino IDE supports the languages C and C++ using special rules of code structuring. The Arduino IDE supplies a software library from the Wiring project, which provides many common input and output procedures. User-written code only requires two basic functions, for starting the sketch and the main program loop, that are compiled and linked with a program stub main() into an executable cyclic executive program with the GNU toolchain, also included with the IDE distribution. The Arduino IDE employs the program avrdude to convert the executable code into a text file in hexadecimal encoding that is loaded into the Arduino board by a loader program in the board's firmware [16].

4.2.2 Spyder

Spyder (formerly Pydee) is an open source cross-platform integrated development environment (IDE) for scientific programming in the Python language. Spyder integrates NumPy, SciPy, Matplotlib and IPython, as well as other open source software. It is released under the MIT license.

Spyder is extensible with plugins, includes support for interactive tools for data inspection and embeds Python-specific code quality assurance and introspection instruments, such as Pyflakes, Pylint and Rope. It is available cross-platform through Anaconda, on Windows with WinPython[9] and Python (x,y), on macOS through MacPorts, and on major Linux distributions such as Arch Linux, Debian, Fedora, Gentoo Linux, openSUSE and Ubuntu.

Spyder makes use of Qt either through the binding PyQt or PySide. This flexibility is reached through a small abstraction layer called QtPy.

Features

1. Editor with syntax highlighting and introspection for code completion
2. support for multiple Python consoles (including IPython)
3. The ability to explore and edit variables from a GUI

4.2.3 Autodesk Inventor 3D

Autodesk Inventor, developed by U.S. based software company Autodesk, is a computer-aided design application for 3D mechanical design, simulation, visualization, and documentation [18]. With Inventor software, engineers can integrate 2D and 3D data into a single design environment, creating a virtual representation of the final product that enables them to validate the form, fit, and function of the product before it is ever built. Autodesk Inventor includes powerful parametric, direct edit and freeform modeling tools as well as multi-CAD translation capabilities and intheirndard DWG drawings. Inventor uses ShapeManager, Autodesk's proprietary geometric modeling kernel. Autodesk Inventor competes directly with SolidWorks, Solid Edge, and Creo.

4.2.4 MakerBot Print

MakerBot Print is free software that optimizes and streamlines the 3D printing process for any work flow. It allows you to discover, prepare, manage, and share 3D prints [15]. It provides three services which are as follows:

- Prepare: Import design files in native CAD and fine-tune their settings for optimal results when printing.
- Manage: Keep your projects organized by automatically arranging models across one or several build plates.
- Monitor: Kick-off prints, control your printer, and monitor print progress remotely.

Chapter 5

Cognition

The software algorithms are a fusion of two well known maze solving algorithms they are random mouse algorithm and Trmaux's algorithm respectively. The aim of the software that is the brains of the octa pod is to be able to figure out a way out of the maze. But by just trying to get out randomly it indeed will not be perspicacious. In order to do so we need to assign a set of rules by which it will guide itself to solve the maze, ie an algorithm. The algorithms used here are random mouse and Trmaux's algorithm as stated earlier . Random mouse algorithm is a basic logic that tells the octapod to make a random decision to take any turn when it reaches a junction. Why random?. Because by arbitrating the decision we will increase the probability of choosing the correct decision in a junction scenario.

5.1 Designs

5.1.1 Femur

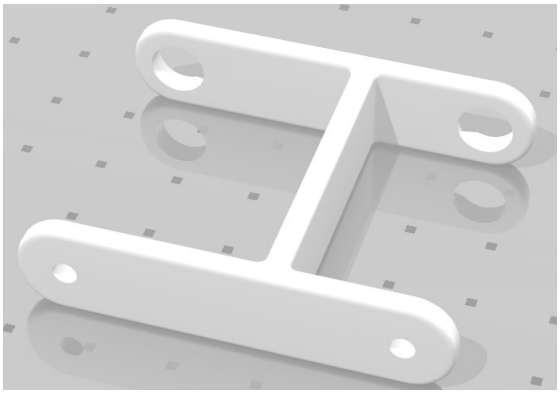

Figure 5.1: Design of Femur.

5.1.2 Tibia

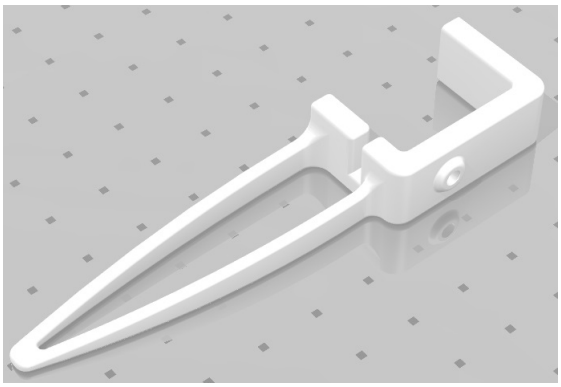

Figure 5.2: Design of Tibia.

5.1.3 Coxa

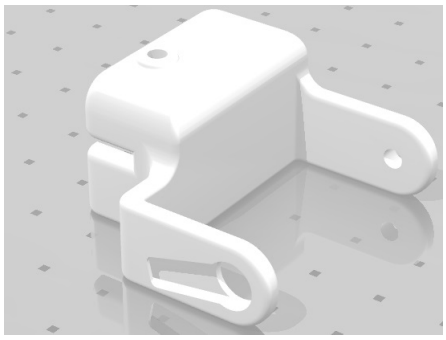

Figure 5.3: Design of Coxa.

5.1.4 Adapter

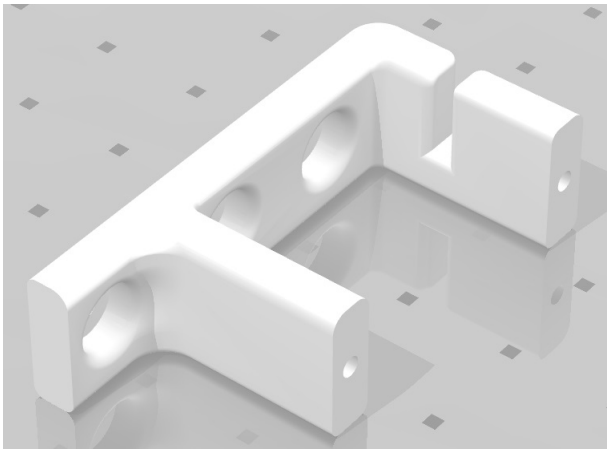

Figure 5.4: Design of SG90 Adapter.

5.1.5 Body

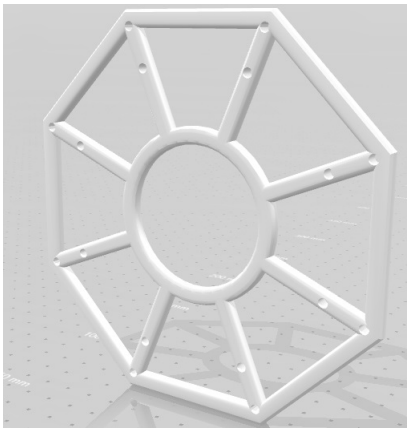

Figure 5.5: Design of Body.

5.1.6 Leg

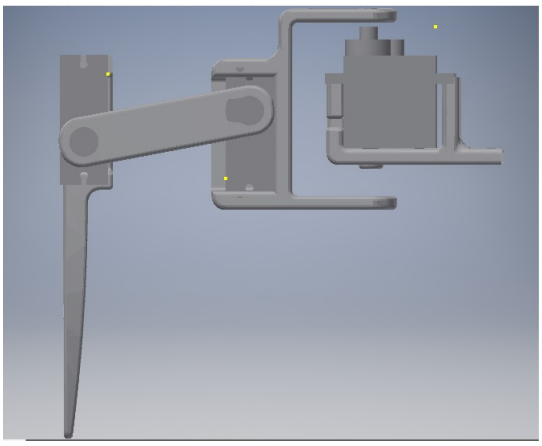

Figure 5.6: Design of Leg.

5.2 Algorithms

5.2.1 Random mouse algorithm

This is a trivial method that can be implemented by a very unintelligent robot or perhaps a mouse. It is simply to proceed following the current passage until a junction is reached, and then to make a random decision about the next direction to follow. Although such a method would always eventually find the right solution, this algorithm can be extremely slow.

This algorithm will only be useful for a junction scenario but wont solve the maze. Hence using another algorithm, ie , Trmaux's algorithm the octapod will be able to solve the maze using certain set of rules.

5.2.2 Trmaux's algorithm

Trmaux's algorithm, invented by Charles Pierre Trmaux, is an efficient method to find the way out of a maze that requires drawing lines on the floor to mark a path, and is guaranteed to work for all mazes that have well-defined passages. A path from a junction is either unvisited, marked once or marked twice. The algorithm works according to the following rules:

Rule 1 : Mark each path once, when you follow it. The marks need to be visible at both ends of the path. Therefore, if they are being made as physical marks, rather than stored as part of a computer algorithm, the same mark should be made at both ends of the path.

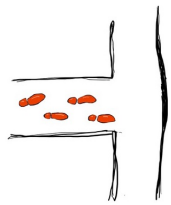

Figure 5.7: Rule 1.

Rule 2 : Never enter a path which has two marks on it.

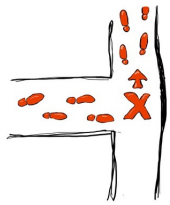

Figure 5.8: Rule 2.

Rule 3 : If you arrive at a junction that has no marks (except possibly for the one on the path by which you entered), choose an arbitrary unmarked path, follow it, and mark it.

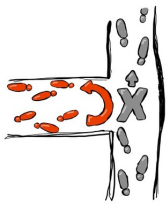

Figure 5.9: Rule 3.

Rule 4 :

- If the path you came in on has only one mark, turn around and return along that path, marking it again. In particular this case should occur whenever you reach a dead end.
- If not, choose arbitrarily one of the remaining paths with the fewest number of marks (zero if possible, else one), follow that path, and mark it.

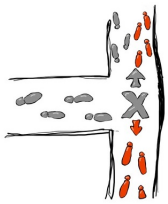

Figure 5.10: Rule 4.

When you finally reach the solution, paths marked exactly once will indicate a way back to the start. If there is no exit, this method will take you back to the start where all paths are marked twice. In this case each path is walked down exactly twice, once in each direction. The resulting walk is called a bidirectional double-tracing.

Here the bot will store the co-ordiantes of every position as it moves along and will map the current co ordinates with the log of stored coordinates to check the marked or double marked paths as mentioned above. Thus the bot will input the coordinates already visited as inputs to the machine learning module and will render the set of coordinates as moot. And will not visit the coordinates again subsequently reducing the coordinates and finally reaching the exit of the maze

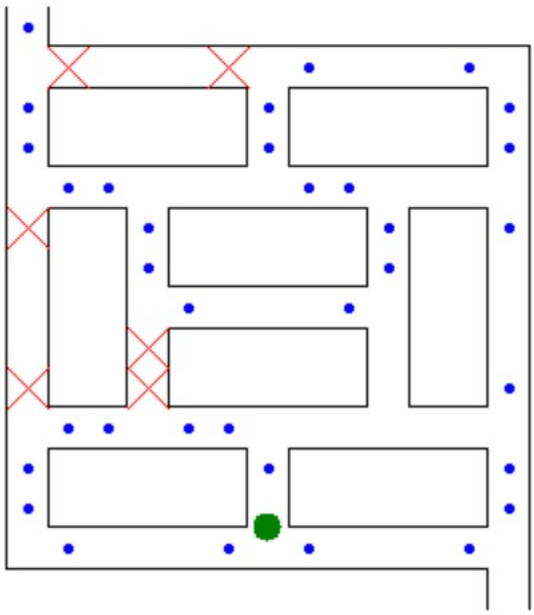

Figure 5.11: Trmaux Algorithm.

5.3 Stratagem

1. The cycle begins when ultrasonic sensor's feed their value to ESP8266 NodeMCU which transmits the data to the thingspeak server on the real time basis.

2. Using the "urllib" library in python we download the data in csv format. The last updates of the field are passed in the argument of the base algorithm function.

3. When the backend code is executed it computes the data fields and proposes the logical direction for the bot to move in based on the machine learning algorithm explained above.

4. This data is then uploaded to think speak server using write API key.

5. This data is then retrieved from the thingspeak server using ESP8266 NodeMCU which is then passed on to the Arduino Mega.

6. Based on the direction given, library function is called in the arduino flash memory which in turn runs the servo's.

Chapter 6

Results and Conclusion

6.1 Connection to server

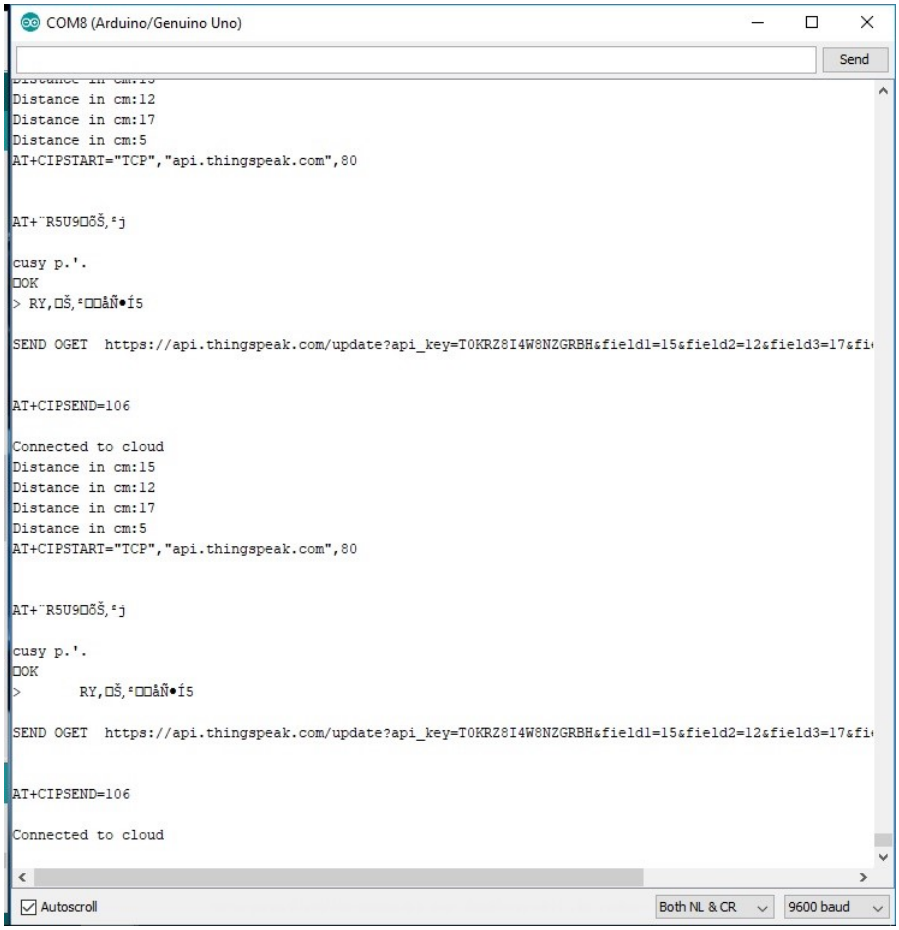

Figure 6.1: Connection to server.

6.2 Ultrasonic sensor data on server

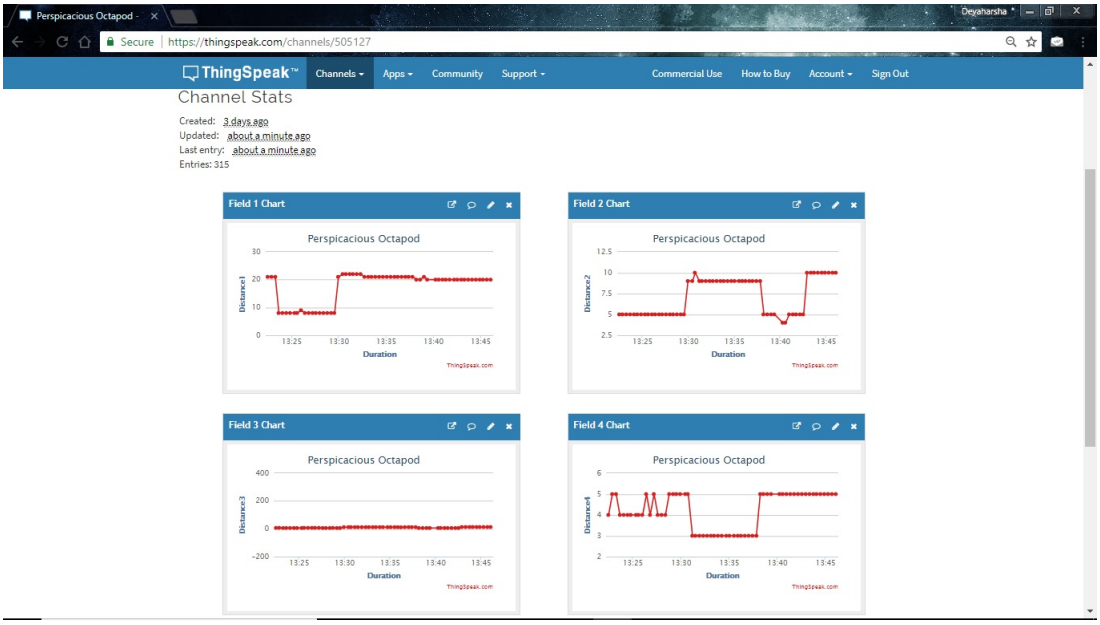

Figure 6.2: Ultrasonic sensor data on server.

6.3 Data retrieval from server

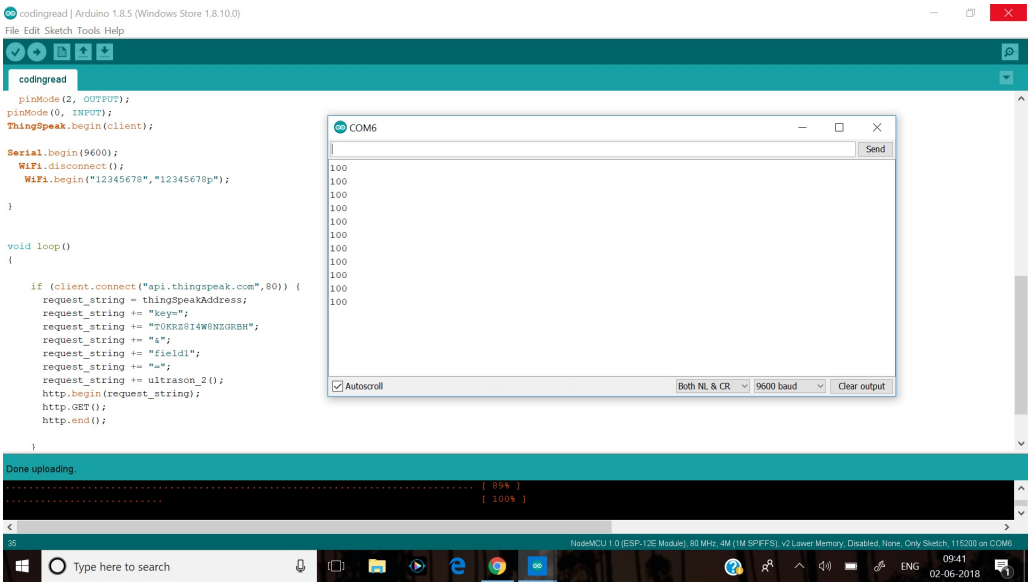

Figure 6.3: Data retrieval from server.

6.4 Octapod

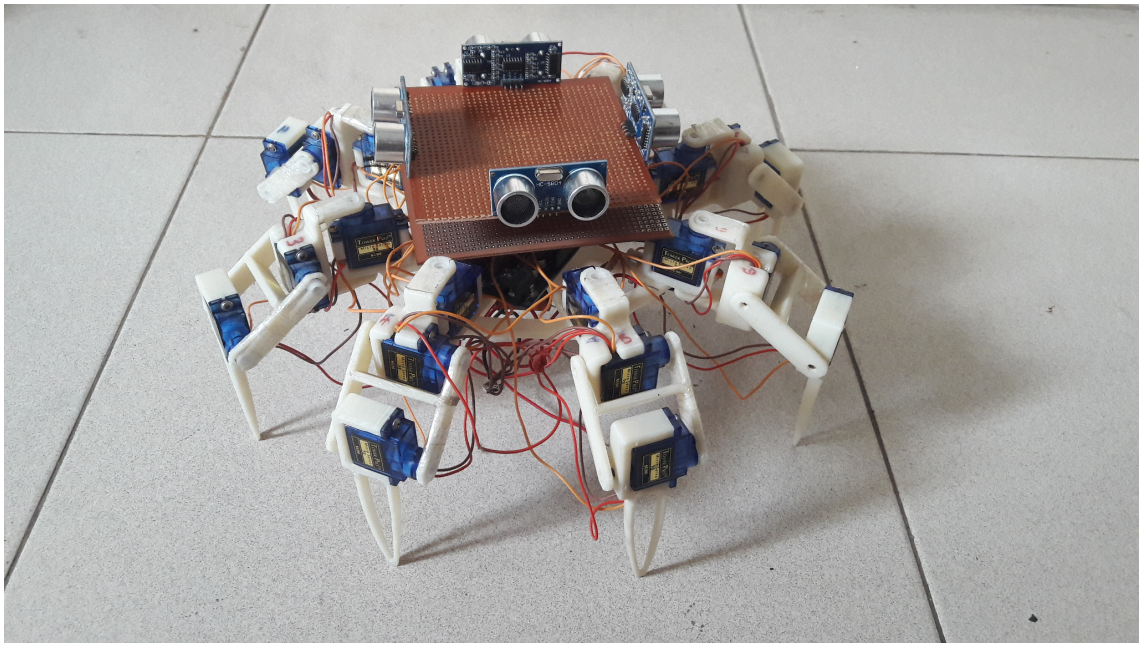

Figure 6.4: Octapod.

6.5 Conclusion

Thus we have successfully cleared the maze after computed iterations.

1. The ultrasonic senses and feeds data to the NodeMCU
2. This is then uploaded to the server.
3. Data is continuously downloaded and computed and command is uploaded to the server
4. This command is handed over to the NodeMCU in-turn over to the arduino which is used to run the servos and the process takes place again till the number of required iterations

Chapter 7

Future Scope

We plan to incorporate a microprocessor like intel edison which will allow the octapod to compute at the remote location itself rather that sending data to the server every time. We also plan on making the purpose of the bot more varied and robust, so it can not only clear mazes but also can do specific tasks like remote surveillance, digital image processing, study inaccessible terrain, etc.

References

[1] Verner, I.M. and D.J. Ahlgren, Robot contest as a laboratory for experiential engineering education. J. Educ. Resour. Comput., 2004. 4(2): p.2.

[2] A. Davids, Urban search and rescue robots: from tragedy to technology, in IEEE Intelligent Systems and their Applications, vol. 17, no. 2, 2002, pp. 81-83.

[3] C. R. Kube and H. Zhang, Collective Robotic Intelligence, in Second International conference on Simulation of Adaptive Behavior, MIT Press, 1992, pp. 460-468.

[4] A. M. Flynn and R. A. Brooks, MIT mobile robots Whats next?, in Proceedings of IEEE International Conference on Robotics and Automation, vol. 1, 1988, pp.611-617.

[5] M. J. Matari, M. Nilsson, and K. T. Simsarian, Cooperative multi-robot boxpushing, in Proceedings of IEEE/RSJ International Conference on Intelligent Robots and Systems, vol. 3, 1995, pp 556-561.

[6] C. R. Kube, H. Zhang, and X. Wang, Controlling collective tasks with an ALN, in Proceedings of IEEE/RSJ International Conference on Intelligent Robots and Systems, vol. 1, 1993, pp 26-30.

[7] R. Simmons, et. al, Coordination for multi-robot exploration and mapping, in Proceedings of the National conference on Artificial Intelligence, 2000, pp. 852858

[8] L. E. Parker, Current state of the art in distributed autonomous mobile robotics, in Distributed Autonomous Robotic Systems 4, Springer-Verlag Tokyo, 2000, pp 3-12

[9] Tolga Karakurt, Akif Durdu, and Nihat Yilmaz , "Design of Six Legged Spider Robot and Evolving Walking Algorithms" in International Journal of Machine Learning and Computing, Vol. 5, No. 2, April 2015

[10] B. L. Luk, D. S. Cooke, S. Galt, A. A. Collie, and S. Chen, Intelligent legged climbing service robot for remote maintenance applications in hazardous environments, Robotics and Autonomous Systems, vol. 53, pp. 142-152, 2005

[11] Arduino. Arduino -Arduinomegaboard2560.[Online; visited 22-1-2018] Available: https://www.arduino.cc/en/Main/arduinoBoardMega, 2018.

[12] Apoorve. Circuitdesign -Servomotor. [Online; visited 22-01-2018] Available:https://circuitdigest.com/article/servo-motor-basics

[13] Micropik. Ultrasonic sensor HCSR04. [Online; visited 22-01-2018] Available: http://www.micropik.com/PDF/HCSR04.pdf, 2018

[14] IP Camera. Wikipedia -IPcamera . [Online; visited 22-1-2018] Available:https://en.wikipedia.org/wiki/IP_camera

[15] MakerBot. MakerBot -MakerBot3Dprinter . [Online; visited 22-1-2018] Available:https://www.makerbot.com/download-print/

[16] Arduino. Wikipedia -Arduino . [Online; visited 22-1-2018] Available:https://en.wikipedia.org/wiki/Arduino

[17] Spyder. Wikipedia -Spydersoftware. [Online; visited 22-1-2018] Available:https://en.wikipedia.org/wiki/Spyder_(software)

[18] Autodesk. Wikipedia -Autodeskinventor . [Online; visited 22-1-2018] Available:https://en.wikipedia.org/wiki/Autodesk_Inventor

[19] MakerBot. Wikipedia -MakerBot3Dprinter. [Online; visited 22-1-2018] Available:https://en.wikipedia.org/wiki/MakerBot

[20] Proteus. Wikipedia -Proteussoftware . [Online; visited 22-1-2018] Available:https://en.wikipedia.org/wiki/Proteus_Design_Suite

[21] NodeMCU. Wikipedia -NodeMCU . [Online; visited 25-5-2018] Available:https://en.wikipedia.org/wiki/NodeMCU

[22] ESP8266. Wikipedia -ESP8266 . [Online; visited 25-5-2018] Available:https://en.wikipedia.org/wiki/ESP8266