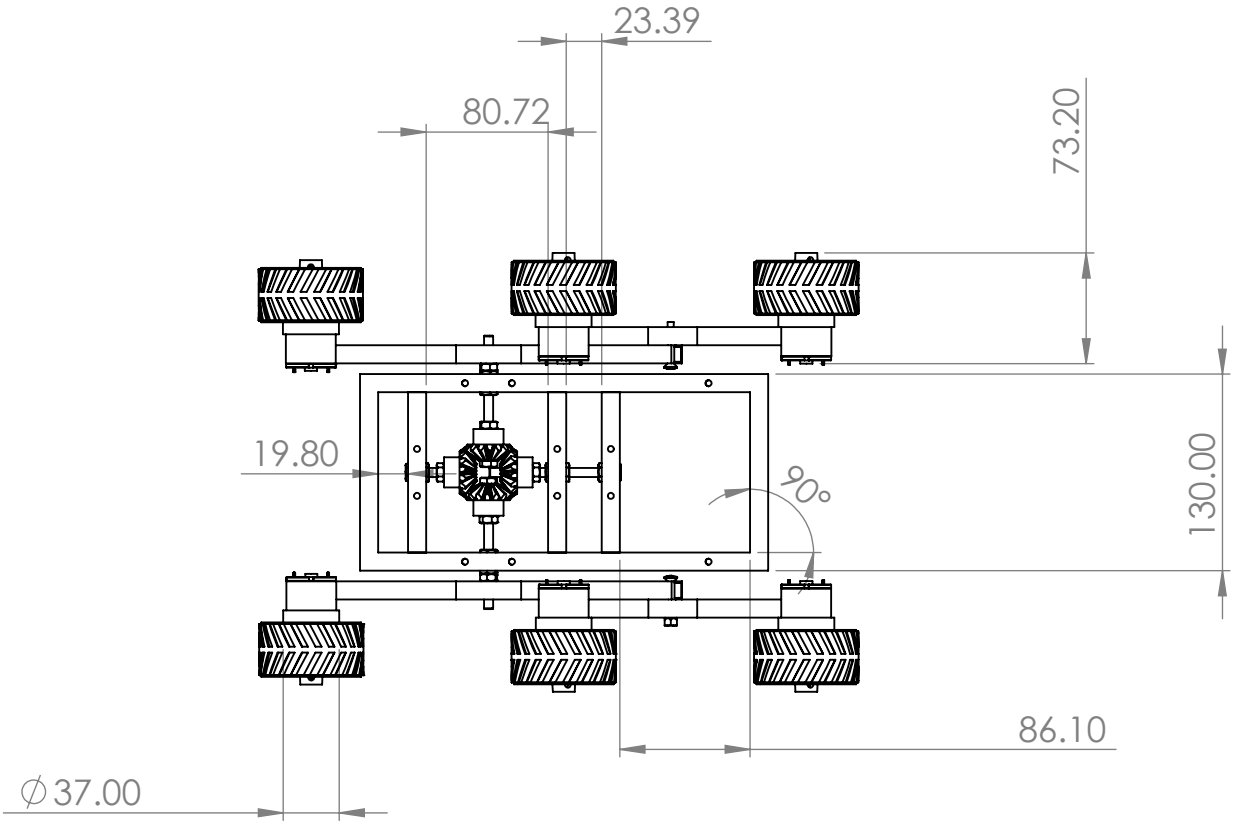

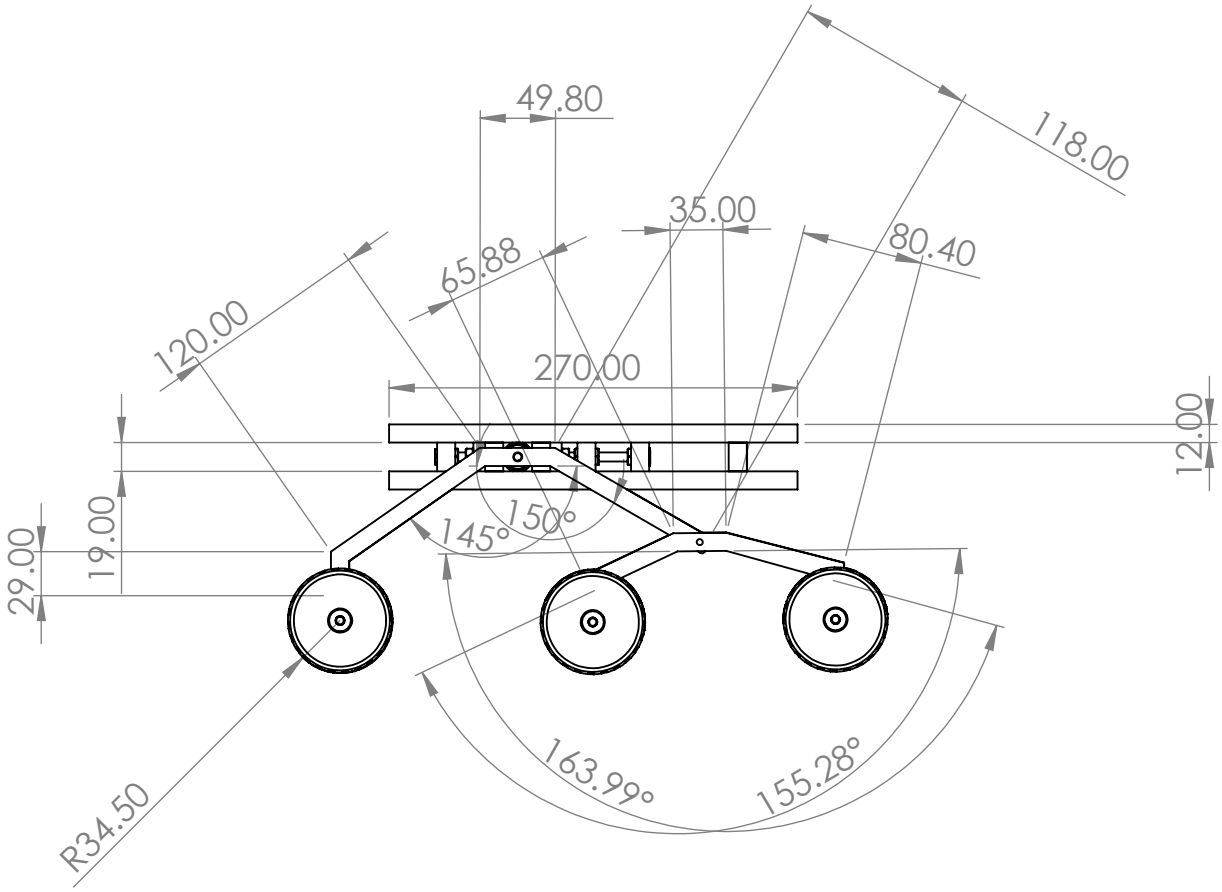

ROVER - TOP & SIDE VIEW