Department of Electronic and Telecommunication Engineering

University of Moratuwa

Sri Lanka

EN2091 Analog Project

Weighing Scale Using Load Cells

Group 10 - Team Morpheus

Group Members:

230203G - Gunarathne K.T.M.B
230300C - Jayaweera N.S
230407K - Meedeniya M.M.H
230526A - Ranawaka R.A.C.D

Date: 11th of December 2025

Abstract

This project presents the design and implementation of an electronic weighing scale using a strain gauge load cell for weight measurement. The low-level differential voltage which is produced by the load cell is proportional to the applied load, and it is amplified using an operational amplifier-based signal conditioning circuit. An active filter is employed to reduce noise and improve measurement stability. The conditioned signal is processed, and the corresponding weight value is displayed on a 16×2 LCD screen through a serial interface. The developed system can measure weights up to 10 kg with satisfactory accuracy. This project demonstrates practical aspects of sensor interfacing, analog signal amplification, noise filtering, and display integration.

Contents

1. Introduction ..... - 4 -
2. System Architecture ..... - 4 -
   Functional Block Diagram ..... - 4 -
   Load Cell ..... - 4 -
   Amplifier Circuit ..... - 5 -
   Power Supply Circuit ..... - 6 -
3. Component Selection ..... - 7 -
   Components for the Amplifier Circuit ..... - 8 -
   Components for the Power Supply Circuit ..... - 9 -
   Other Components ..... - 9 -
4. PCB Design ..... - 10 -
   Amplifier Circuit ..... - 10 -
   Power Supply Circuit ..... - 11 -
5. Enclosure Design ..... - 12 -
6. Challenges Encountered ..... - 14 -
7. Future Works ..... - 15 -
8. Conclusion ..... - 15 -
9. Contribution of Group Members ..... - 16 -
10. Acknowledgement ..... - 16 -
11. References ..... - 16 -

Introduction

In this project, an electronic weighing scale is designed and developed using a strain-gauge-based load cell with a maximum measuring capacity of 10 kg. The system operates using a 230 V AC mains power supply. This mains voltage is stepped down to 13.5 V AC through a transformer and then rectified and regulated to provide the required DC voltages for different circuit components. The small electrical signal generated by the load cell is amplified and processed using a microcontroller, which calculates the corresponding weight and displays it on a 16×2 LCD screen. Additionally, a protective enclosure is designed to house all electronic components securely.

System Architecture

Functional Block Diagram

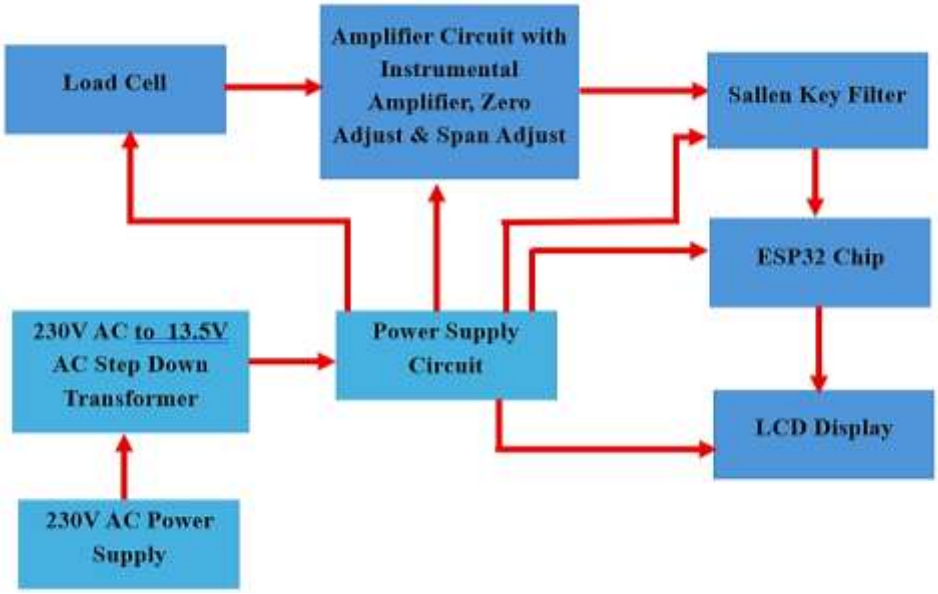

Figure 1 : Functional Block Diagram

Load Cell

This weighing scale using a strain gauge–based load cell sensor operates by converting the applied mechanical force into an electrical signal and processing it to obtain a readable weight value. When an object is placed on the circular platform, the applied weight is transferred to the load cell. The load cell consists of strain gauges arranged in a Wheatstone bridge (Figure 2)configuration. As the load is applied, the strain gauges deform slightly, causing a proportional change in their electrical resistance. This resistance variation

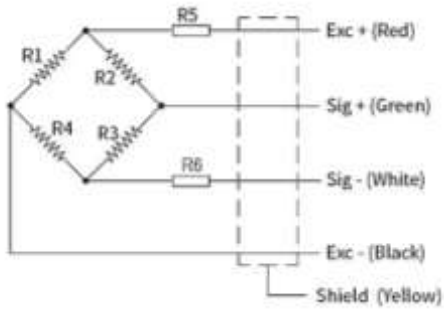

Figure 2 : Wheatstone Bridge in Load Cell Sensor

produces a small differential DC voltage signal corresponding to the applied weight. The output signal from the load cell is fed into an amplifier circuit.

Amplifier Circuit

Instrumentation Amplifier

This is the first stage of the amplifier circuit, and when the output from the load cell is fed into the amplifier circuit, this is used to amplify low-level differential voltage output generated by the load cell. In our system this has a gain around 100. Its high input impedance and high CMRR enable accurate signal amplification while minimizing noise.

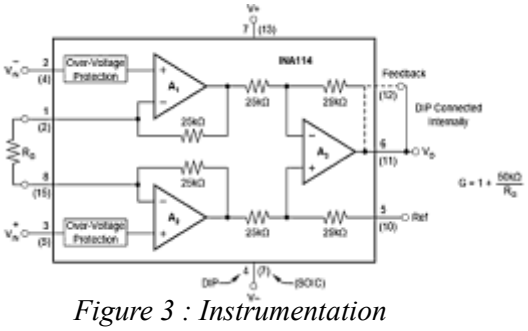

Figure 3 : Instrumentation Amplifier Circuit Inside the Instrumentation Amplifier IC

Zero Adjust Circuit

The zero adjust circuit is incorporated after the instrumentation amplifier stage to eliminate offset errors and ensure accurate weight measurement. Even when no load is applied to the load cell, small offsets can appear at the output due to strain gauge mismatch, amplifier input offset voltage, temperature variations, or mechanical stresses. If not corrected, these offsets would cause the weighing scale to display a non-zero value at no load.

In our design, the zero adjustment is implemented using an operational amplifier (TL084) configured with a variable reference voltage derived from a potentiometer connected between +12 V and −12 V. The wiper of the potentiometer provides an adjustable DC voltage, which is fed into the summing node of the op-amp through equal-value resistors (10 kΩ). This arrangement allows a small positive or negative DC offset to be added to or subtracted from the amplified load cell signal. By adjusting the potentiometer, the output of this stage can be precisely set to zero when the weighing platform is unloaded.

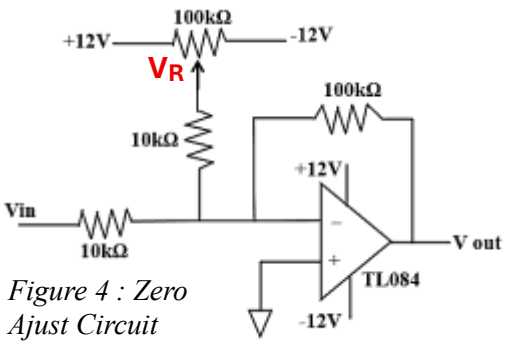

Figure 4 : Zero Ajust Circuit

Equations:

$$\frac{Vin}{10\times10^3} + \frac{VR}{10\times10^3} = \frac{Vout}{100\times10^3}$$

$$Vin + VR = \frac{Vout}{10}$$

Zero adjust is performed when the load cell is unloaded. So the Vout should become theoritically zero after zzero adjust is performed. So,

$$VR = -Vin$$

Span Adjust Circuit

The span adjust circuit is used to calibrate the gain of the weighing scale system so that the output voltage corresponds accurately to the applied load over the full measurement range. In our design, the span adjustment is implemented using an operational amplifier (TL084) configured with a variable gain. A potentiometer is incorporated in the feedback path of the amplifier, allowing the overall gain of this stage to be finely adjusted. During calibration, a known 10kg weight is placed on the load cell, and the potentiometer is adjusted until the system output corresponds to the correct weight value on the display. This ensures that the full-scale output voltage of the signal conditioning circuit accurately represents the maximum rated load of the weighing scale. In our case the full scale output voltage has been chosen as 3V for maximum rated load 10kg, since this output needs to be fed to the microcontroller.

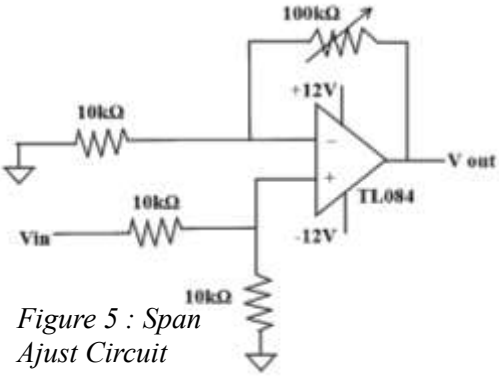

Figure 5 : Span Ajust Circuit

Equation : $Vout = \frac{1}{20}(Resistance\ of\ the\ variable\ resistor + 10)\ Vin$

Filter Circuit

In the end of the amplifier circuit, a 3rd order Sallen Key low pass filter with a 10Hz cutoff is implemented. The primary function of this filter is to allow low-frequency signals corresponding to actual weight changes to pass through while attenuating high-frequency noise components. Since weight variations occur slowly, high-frequency signals do not contain useful information and must be removed.

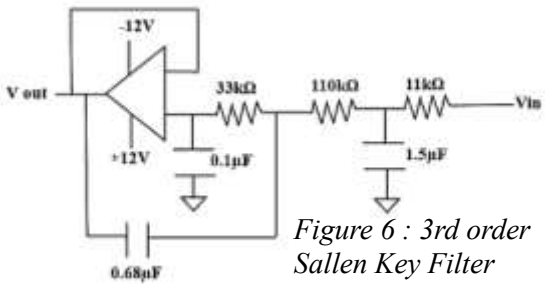

Figure 6 : 3rd order Sallen Key Filter

ESP32 Chip & LCD Display

The amplified and filtered signal is read by the microcontroller's analog-to-digital converter. Using the programmed calibration parameters and conversion algorithms, the microcontroller processes the signal and converts it into a corresponding weight value. This calculated weight is then displayed on an LCD screen.

Power Supply Circuit

The 13.5(RMS) V AC output from the transformer is fed to the power supply circuit input. The voltage goes through the Delon Doubler circuit. Here Delon Doubler circuit has been used to get dual supply voltage. Then the regulators regulate the voltage to +12V, -12V, +5V and +3.3V, and then the voltage is distributed to the components.

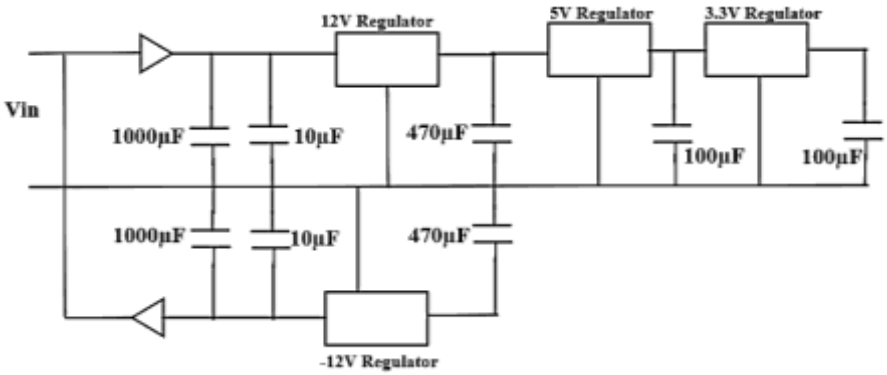

Figure 7 : Power Supply Circuit

Component Selection

Components for the Amplifier Circuit	Components for the Power Supply Circuit	Other Components
INA 114 Instrumentation Amplifier – 1	230V AC to 13.5 V AC Step Down Transformer	20kg Load Cell
TL084 OpAmp IC – 1	1N4007 Diodes – 2	ESP-WROOM-32E microcontroller
TL072 OpAmp IC – 1	50V 1000µF Capacitors – 2	16 x 2 LCD Display
470Ω Resistor – 1	50V 470µF Capacitors – 2	IIC/I2C/TWI/SPI Serial Interface Board Module Port for 1602 LCD Display
100kΩ variable resistors -2	50V 100µF Capacitors – 2	3 pin AC power base
10kΩ resistors – 8	50V 10µF Capacitors – 2	Power cable
100kΩ resistors – 1	LM7812 12V Regulator – 1	
110kΩ resistors – 1	LM7912 -12V Regulator – 1	
11kΩ resistors – 1	LM7805 5V Regulator – 1	
33kΩ resistors – 1	AMS1117 3.3V Regulator – 1	
0.1µF Capacitors – 5	Switch	
0.68µF Capacitors – 1	LED	
1.5µF Capacitors – 1	JST Wire connectors 2.54mm with socket 5 pin – 1	
Push buttons – 2	JST Wire connectors 2.54mm with socket 2 pin – 3	
JST Wire connectors 2.54mm with socket 4 pin – 3		
JST Wire connectors 2.54mm with socket 5 pin – 1		

Table 1 : Used Component List

Components for the Amplifier Circuit

INA 114 Instrumentation Amplifier IC

When the Wheatstone bridge of load cell sensor outputs the voltage difference between the two nodes, this instrumentation amplifier is used to amplify only the voltage difference between V+ and V- and rejects everything common to both. According to the datasheet, this has an extremely high common mode rejection ratio which is around 115 dB (1). This has a high input impedance, so loading the bridge of load cell sensor is negligible. Gain of this amplifier can be changed in wide range, so you can choose a better gain. Such characteristics of the amplifier ensure accurate and stable weight measurement.

TL084 OpAmp IC

This is a quad JFET-input operational amplifier IC. This IC reduces the complexity of the PCB, having 4 op amp in one IC. According to the datasheet, since this has a high input impedance and a low input bias current, which is around 65pA, this creates no voltage across the resistors. Because such voltage changes can affect the sensitive signals from the load cell sensor. So, these characteristics help to ensure accurate weight measurement. (2) In our design this is used for the inverting amplifier, zero adjust system and span adjust system.

TL072 OpAmp IC

This is a dual JFET-input operational amplifier that is very commonly used in active filter circuits. In our design this opamp is used for the 3rd order Sallen key filter circuit. Since this has a typical input noise of 18 nV/√Hz, it filters small signals, and low noise prevents corrupting the amplified load-cell output. (3)

470Ω Resistor

This resistor is used to get a nearly 100 gains from the instrumentation amplifier .

100kΩ variable resistors

The span adjusts and zero adjust circuits are mainly controlled using these resistors. For this resistance, a big current does not flow through these resistors. In the zero adjust, if the resistor values are very low, it will load the opamp node, and then voltage will be pulled strongly, there will be sudden drastic changes in voltage when performing calculations and calibration will be unstable. If resistance is too large, thermal drift increases and becomes noisy. In the span adjust, if the resistance of the variable resistor is too low, it will be closer

to the other resistor values in the circuit and will high affect to the change of the gain. But for this value amplifier stays linear and the calibration becomes more stable.

Components for the Power Supply Circuit

230V AC to 13.5 V AC Step Down Transformer

For LM7812, the minimum input voltage to maintain linear regulation is 14.6V (4). Mainly to satisfy that requirement, this transformer was selected.

LM7812 12V Regulator & LM7912 negative 12V Regulator

These two regulators are used to give a +12V and -12V input for load cell, INA 114, Zero Adjust, TL084 and TL072 ICs.

LM7805 5V Regulator

This regulator is used to give a +5V input to LCD display.

AMS1117 3.3V Regulator

This regulator is used to give a +3.3V input to esp32 chip.

Other Components

Load Cell

In this project, a strain-gauge type load cell with 20kg maximum capacity was used. Its Rated output is 2.0±0.15(MV/V). Since its recommended excitation voltage is 10~15 V, in our product excitation voltage is given as 12V.

16 x 2 LCD Display

LCD Display is used to display the weight value in the screen. Weight is displayed in kilograms.

IIC/I2C/TWI/SPI Serial Interface Board Module Port for 1602 LCD Display

The IIC/I²C/TWI serial interface board for a 1602 LCD is used to enable serial communication between a microcontroller and the LCD display, reducing the number of required I/O pins and simplifying the hardware interface.

PCB Design

Amplifier Circuit

Schematic & Software Designs

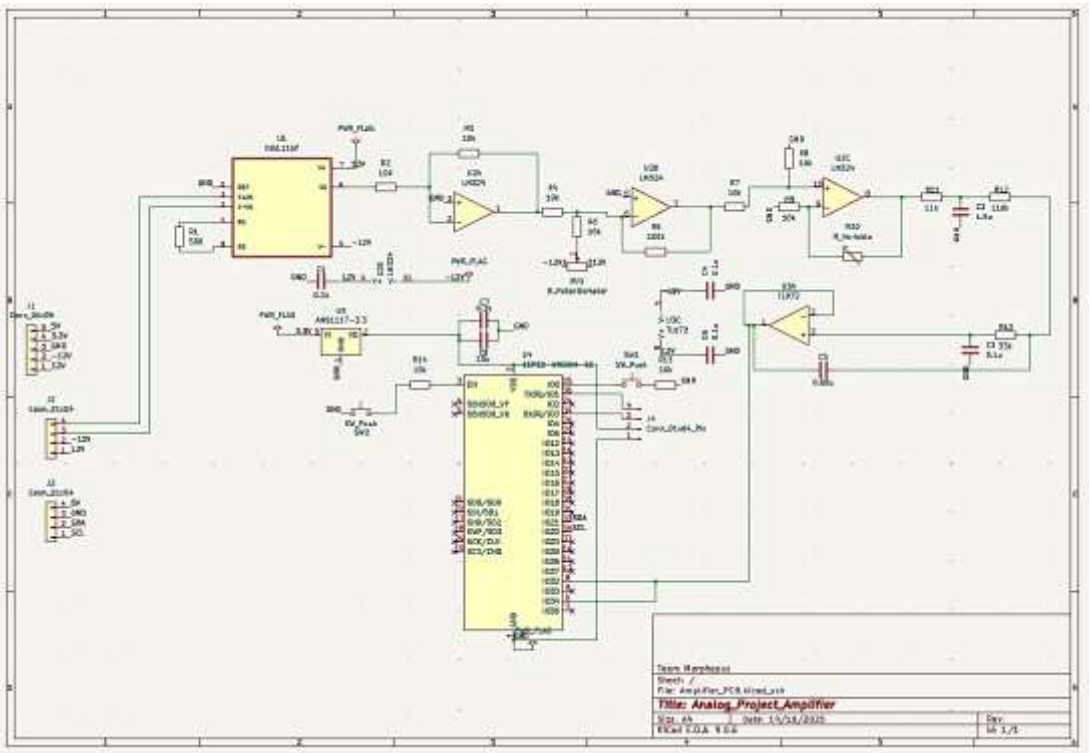

Figure 8 : Amplifier Circuit Schematic

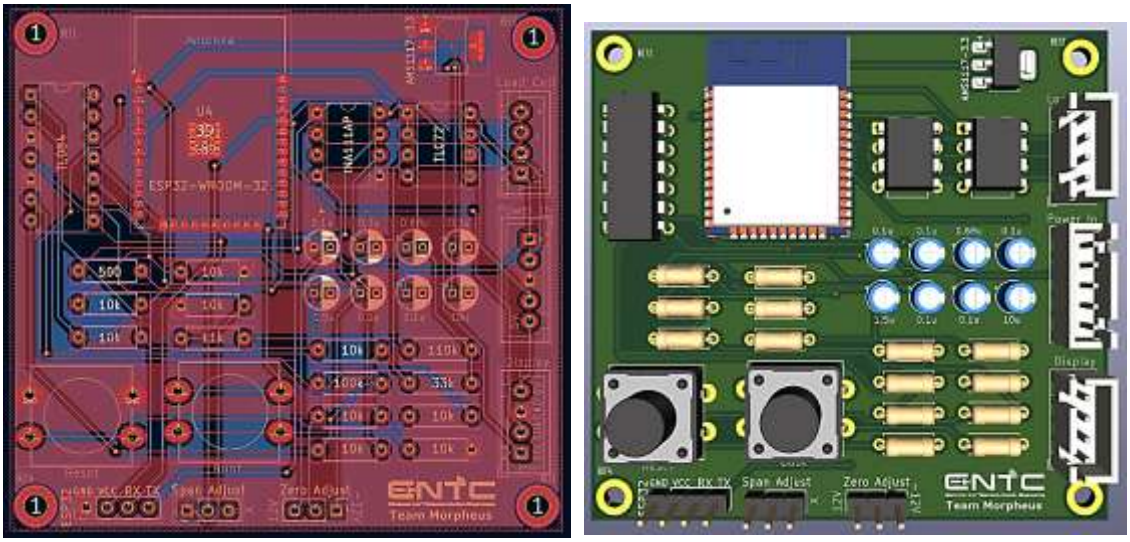

Figure 9: Amplifier Circuit Software Designs

Before Soldering and After Soldering

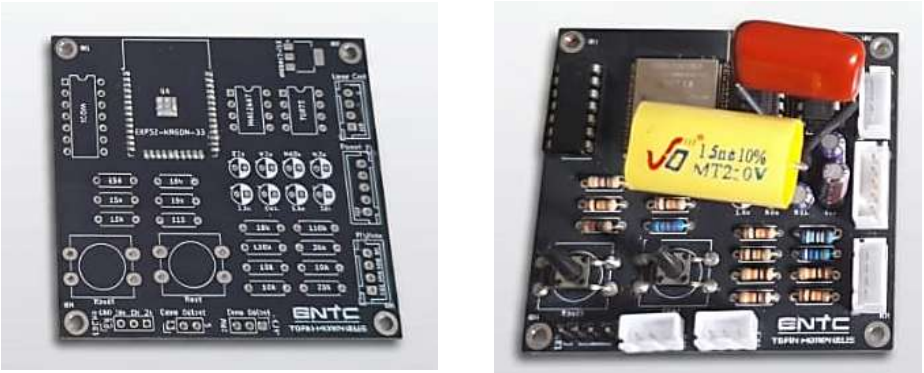

Figure 10 : Amplifier Circuit PCB

Power Supply Circuit

Schematic & Software Design

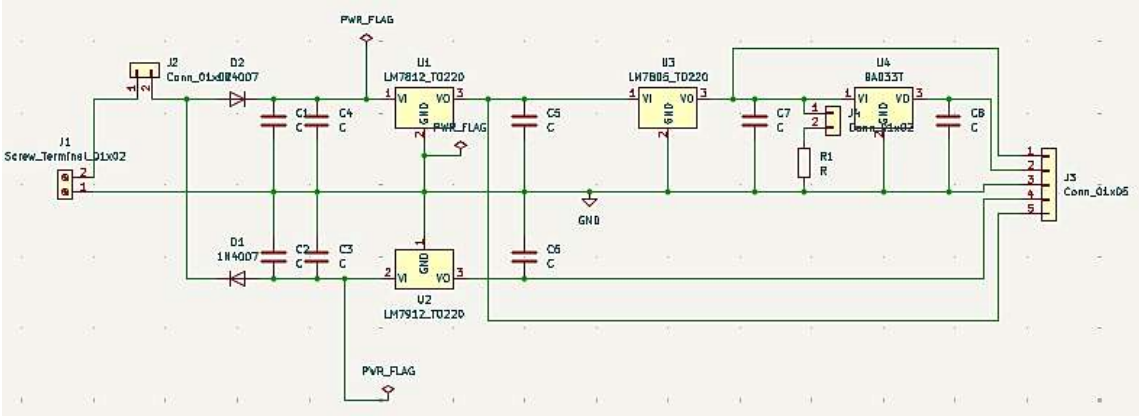

Figure 11 : Power Supply Circuit Schematic

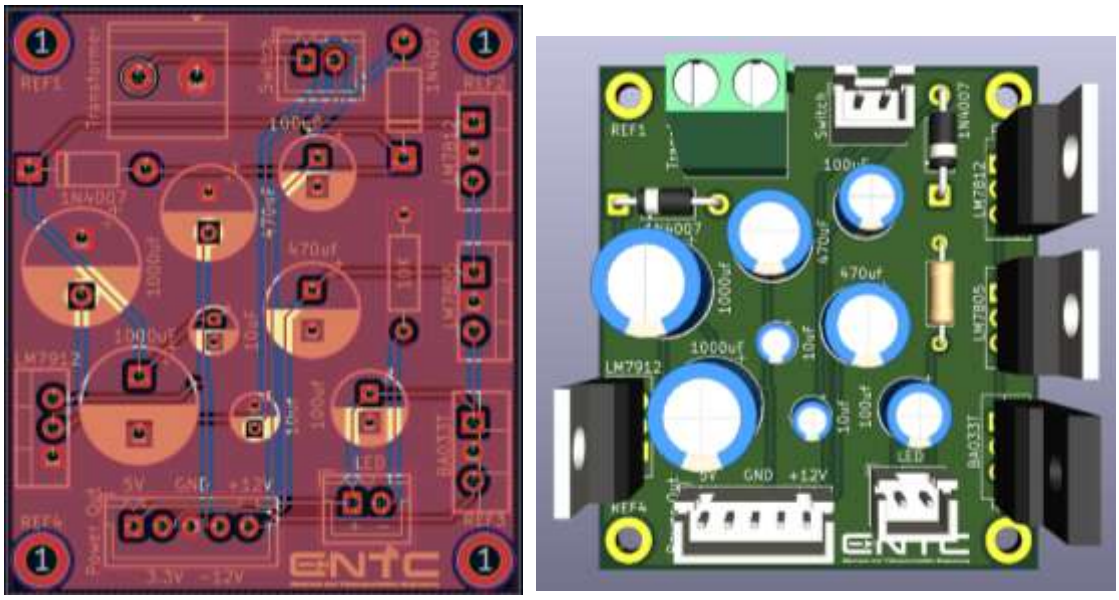

Figure 12 : Power Supply Circuit Software Designs

Before Soldering & After Soldering

Figure 13 : Power Supply Circuit PCBs

Enclosure Design

CAD Model

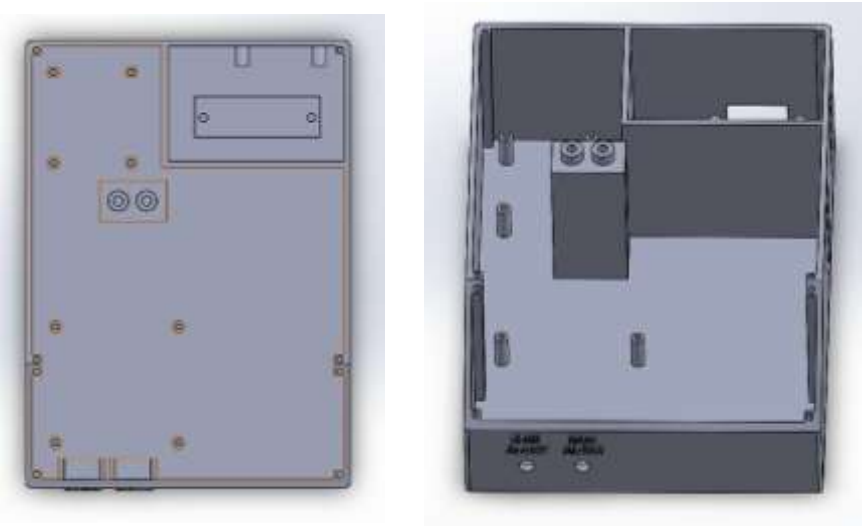

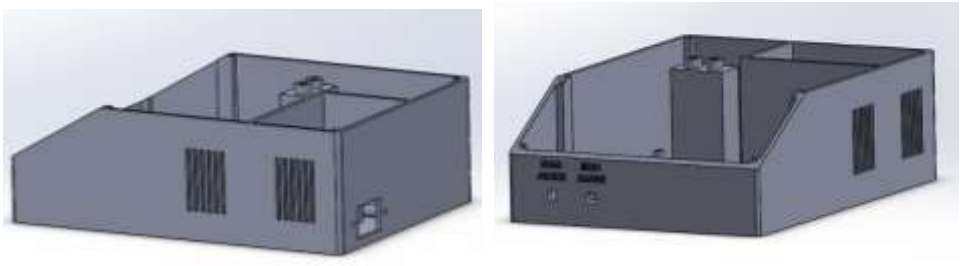

Figure 14 : Base

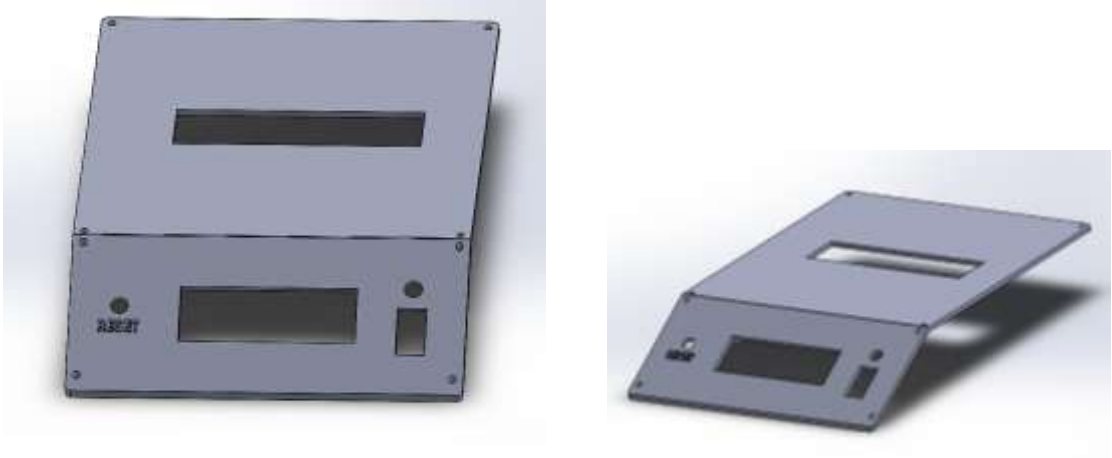

Figure 15 : Top

Figure 16 : Assembled Design

3D Printed Design

Figure 17 : 3D Printed & Assembled Enclosure

Challenges Encountered

- During the implementation of the circuit, 0.68 µF and 1.5 µF electrolytic capacitors were not readily available in the local Sri Lankan market. As an alternative, ceramic capacitors with equivalent capacitance values were selected to proceed with the project without delay. However, the terminal thickness and lead spacing of the ceramic capacitors were not compatible with the PCB design. To overcome this issue, insulated connecting wires were soldered to the capacitor terminals, and these wires were then carefully soldered onto the PCB.
- During the initial PCB testing conducted before assembling the product, the circuit produced the expected output. However, one day prior to the project evaluation, after assembling the complete system and performing the testing again, unexpected issue was observed. The output of the amplifier circuit appeared as a sine wave with an approximately 60 V peak-to-peak voltage, which was abnormal and not expected from the design.

  At first, all the circuit connections and solder joints were carefully checked, but no faults were found. Suspecting a defective capacitor, a new PCB was soldered and tested, yet the same issue occurred. When the previously working PCB was powered again using the power supply, it no longer showed the expected voltage variation. At this stage, it was assumed that some components might have been damaged due to the excessive voltage.

  As the issue could not be identified through repeated testing, guidance was obtained from Dr. Upeka Premaratne. After examining the setup, he suggested that the problem might be related to the transformer used in the power supply. According to his explanation, electromagnetic radiation from the transformer could have interfered with nearby signal wires, inducing unwanted currents.

  Although the transformer had been placed in a separate section of the enclosure, it was advised to further shield the transformer using a metal plate and to minimize and shorten the signal wire lengths to reduce electromagnetic interference. However, due to

the use of ceramic capacitors with relatively thick terminals and attached connecting wires, it was difficult to significantly shorten the terminal lengths, and physical size differences further limited the effectiveness of this modification.

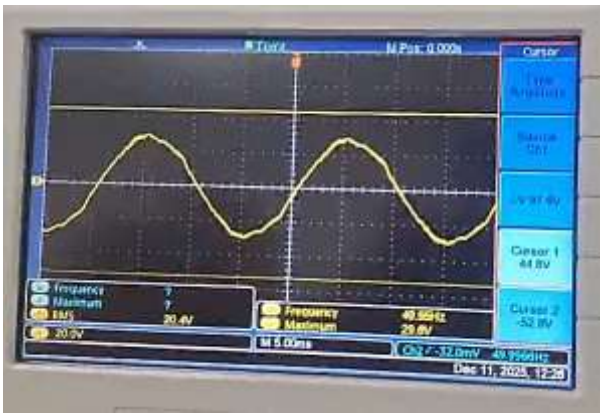

Figure 18 : 60V(peak-peak) Sine wave that observed

- Another challenge was related to the weighing platform structure. Initially, a wooden span was used, but it deformed under higher loads and touched the base of the setup, affecting measurement accuracy. To resolve this, the wooden span was replaced with an acrylic plate, and the gap between the platform and the base was increased to ensure that the load cell could bend freely without contacting any surface.

Future Works

1. This design can be optimized for battery operation by using a low power component making the system portable.
2. Adding Bluetooth or Wi-Fi connectivity would allow wireless data transmission to a mobile phone or computer for monitoring and record keeping.

Conclusion

In this project, an electronic weighing scale was successfully designed and implemented using a strain gauge load cell. The very small differential output produced by the load cell was amplified using an operational amplifier-based amplifier circuit, and unwanted noise was reduced using an active filter stage. The processed signal was then converted into a readable weight value and displayed clearly on a 16×2 LCD, providing a user-friendly interface. Overall, the project achieved its intended objectives and provided practical exposure to sensor interfacing, analog signal conditioning, and measurement system design.

Contribution of Group Members

230203G Gunarathne K.T.M.B	Coding to display the measured weight using esp32 chip and LCD display, Soldering, Assembly, Component Selection
230300C Jayaweera N.S	PCB Designing, Soldering, Assembly, Component Selection
230407K Meedeniya M.M.H	Circuit Designing, Enclosure Designing, Assembly, Component Selection
230526A Ranawaka R.A.C.D	Enclosure Span Designing, Soldering, Assembly, Component Selection

Acknowledgement

We would like to sincerely thank Dr. Sampath Perera and our supervisor Mr. Viruthshaan for their guidance, encouragement, and constant support throughout this project.We also appreciate the time and constructive feedback provided by Dr. Jayathu Samarawickrama, Dr. Pranjeevan Kulasingham, and Dr. Wageesha N. Manamperi,Mr. Lathika Wathsara during the evaluation of the project, which greatly helped us to improve its quality.Our heartfelt thanks go to the academic and non-academic staff of the ENTC Department for their assistance and for providing the necessary facilities during the project period. Finally, we are grateful to all our group members for their teamwork and commitment which were essential to the successful completion of this project.

References

1. [Online] https://www.alldatasheet.com/datasheet-pdf/view/847617/TI1/INA114.html.

2. [Online] https://www.alldatasheet.com/datasheet-pdf/view/25385/STMICROELECTRONICS/TL084.html.

3. [Online] https://www.alldatasheet.com/datasheet-pdf/view/28775/TI/TL072.html.

4. [Online] https://www.alldatasheet.com/datasheet-pdf/pdf/838008/TI1/LM7812.html.