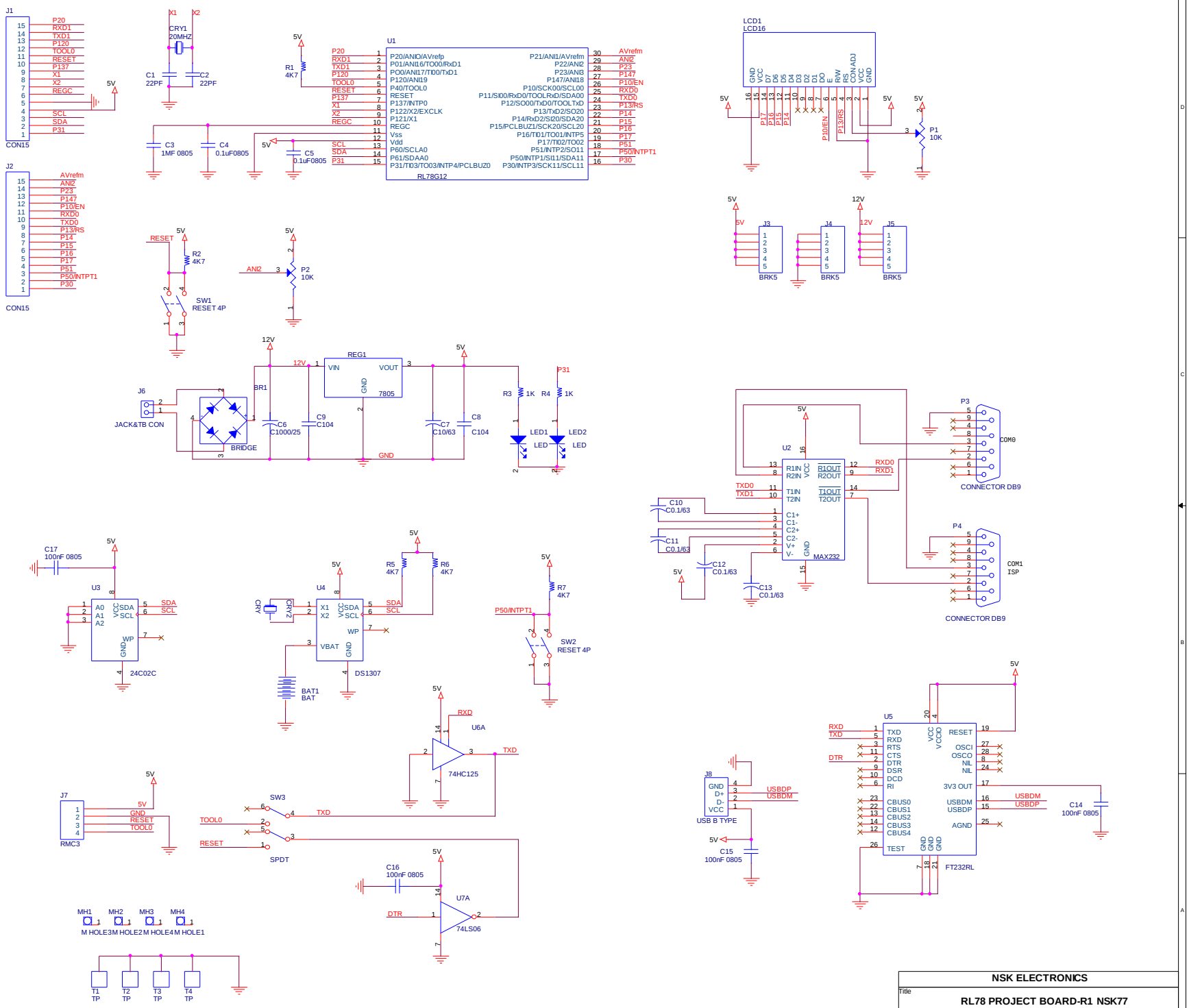

NSK ELECTRONICS	
Title	RL78 PROJECT BOARD-R1 NSK77
Size	Document Number
Rev	
Custom	
Date:	Tuesday, August 05, 2014
Sheet	1 of 2