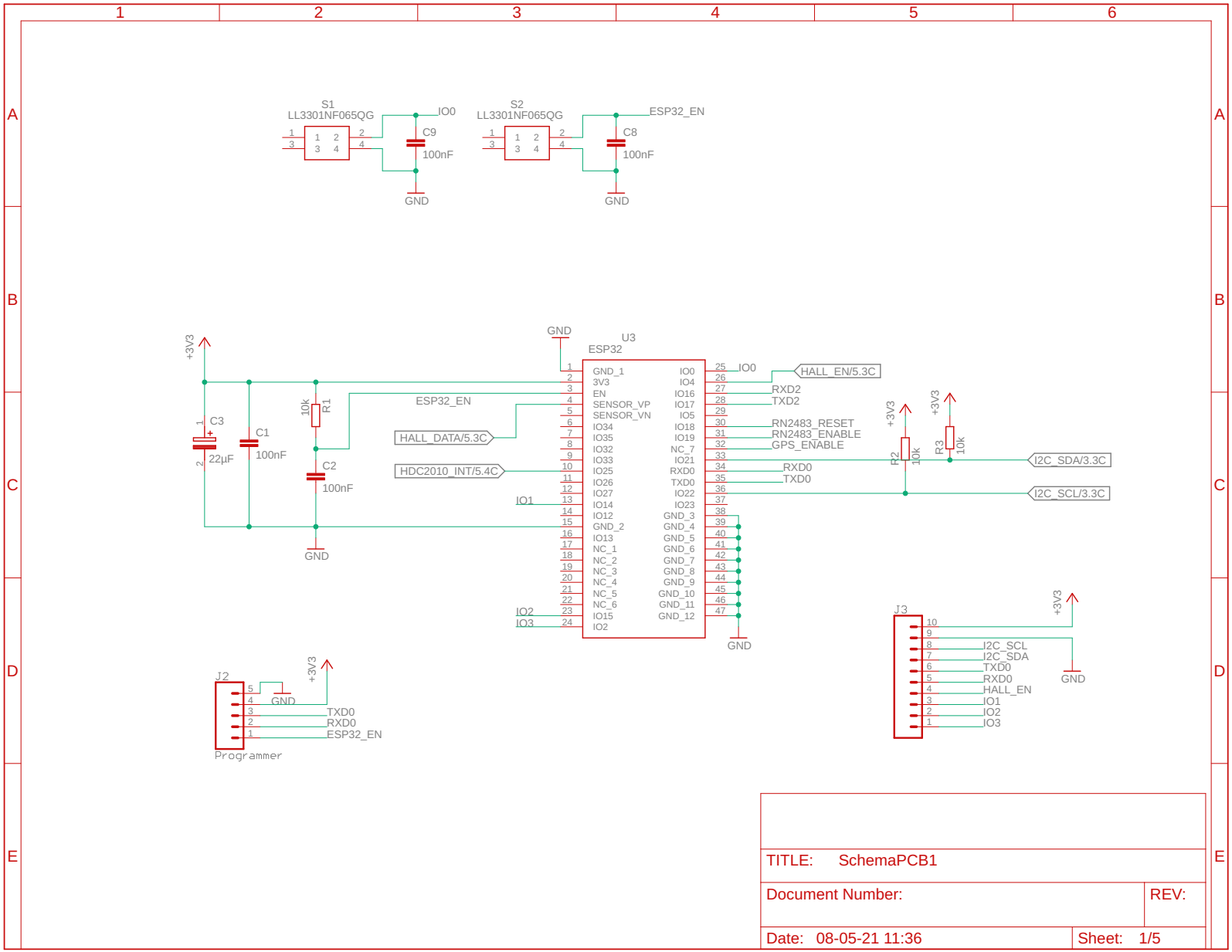

TITLE: SchemaPCB1	
Document Number:	REV:
Date: 08-05-21 11:36	Sheet: 1/5

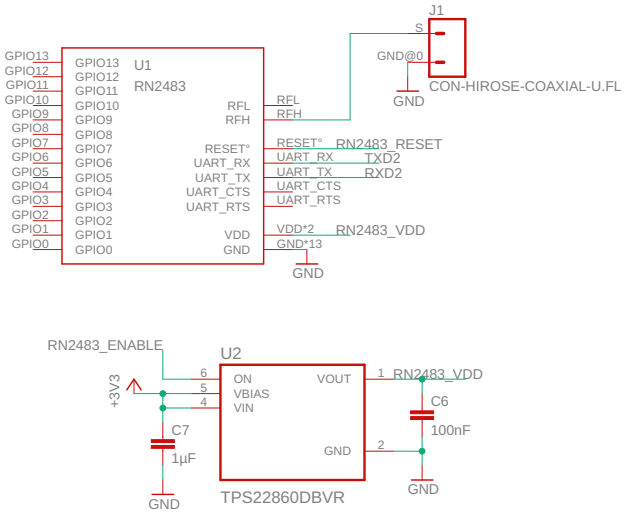

TITLE: SchemaPCB1	
Document Number:	REV:
Date: 08-05-21 11:36	Sheet: 2/5

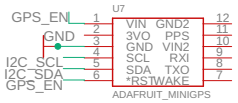

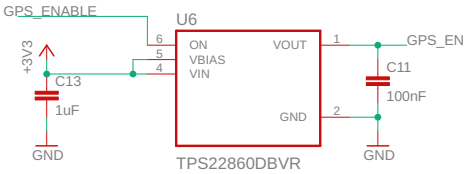

TITLE: SchemaPCB1	
Document Number:	REV:
Date: 08-05-21 11:36	Sheet: 3/5

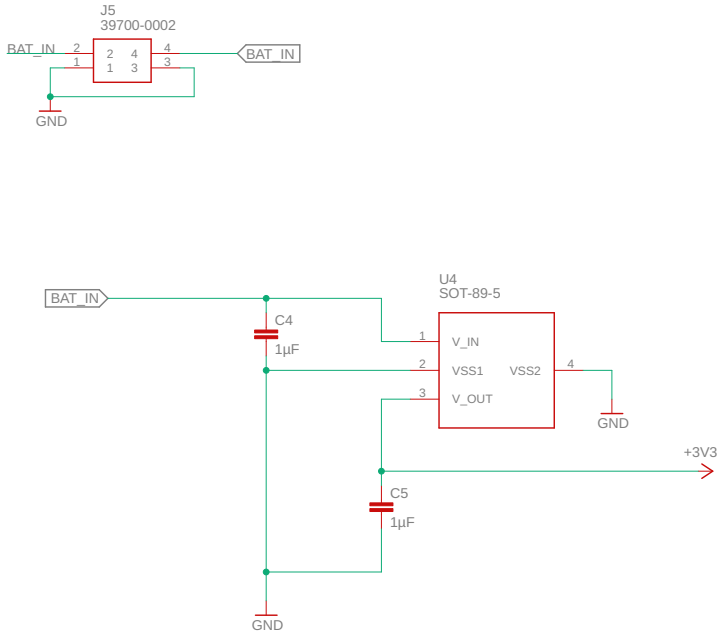

TITLE: SchemaPCB1	
Document Number:	REV:
Date: 08-05-21 11:36	Sheet: 4/5

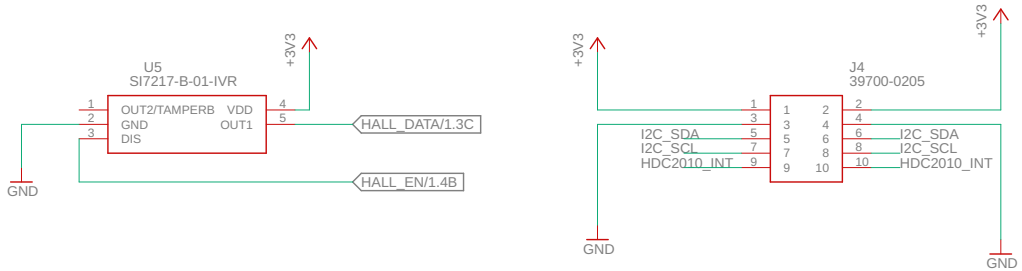

TITLE: SchemaPCB1

Document Number:

REV:

Date: 08-05-21 11:36

Sheet: 5/5