1.Interfacing the Light Emitting Diode (LED) .

Requirements

1. Arduino Uno
2. Led -1
3. Resistor – 330ohm
4. Connecting wires

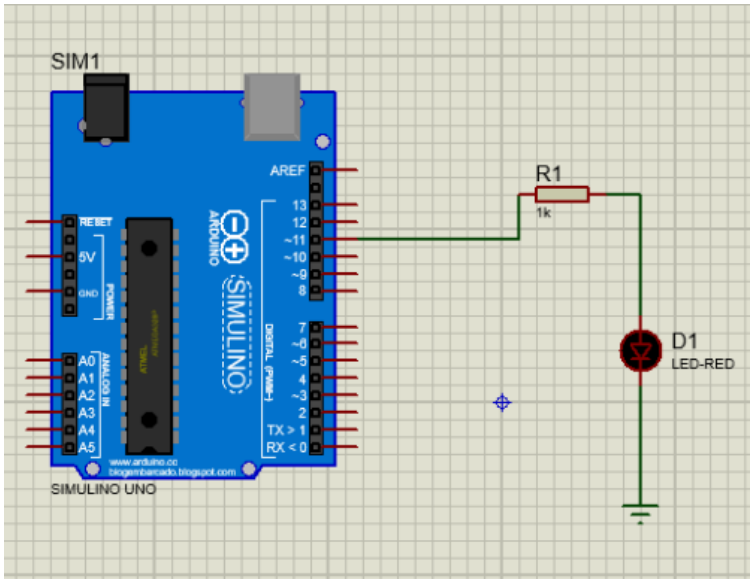


```
void setup() {
  pinMode(8,OUTPUT);
}
void loop() {
  digitalWrite(8,HIGH);
  delay(500);
  digitalWrite(8, LOW);
  delay(500);
}
```

2.Interfacing the RGB LED with the Arduino.

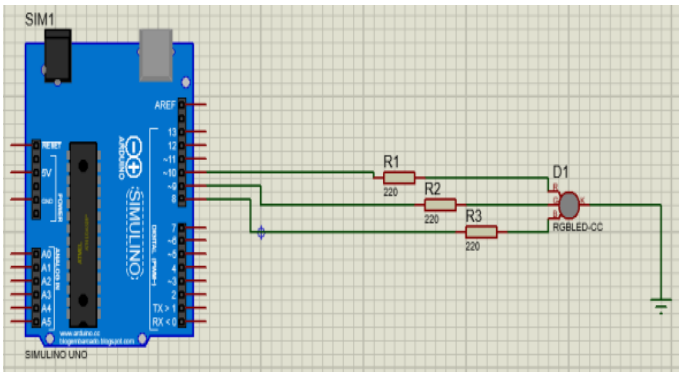

Requirements

1. Arduino Uno
2. RGBLed -1
3. Resistor – 220 ohm – 3Nos
4. Connecting wires

```
int r=7, g=6, b=5;
void setup() {
  pinMode(r, OUTPUT);
  pinMode(g, OUTPUT);
  pinMode(b, OUTPUT);
}
void loop() {
  setColor(255,0,0); delay(500);
  setColor(0,255,0); delay(500);
  setColor(0,0,255); delay(500);
  setColor(255,255,255); delay(500);
  setColor(175,0,255); delay(500);
}
void setColor(int rv,int gv,int bv){
  analogWrite(r,rv);
  analogWrite(g,gv);
  analogWrite(b,bv);
}
```

3.Traffic Signal Light Simulation.

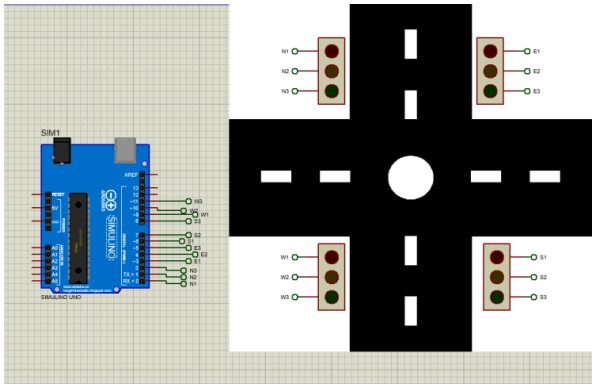

Requirements

1. Arduino Uno
2. Image of Junction
3. Traffics Light LED -4
4. Connecting wires

```
int timerRed = 5000;
int timerYellow = 2000;
int trafficPins[] = {0,1,2,3,4,5,6,7,8,9,10,11};
int pinCount = 12;
void setup() {
  for(int i=0;i<pinCount;i++) {
    pinMode(trafficPins[i], OUTPUT);
  }
  for(int i=0;i<pinCount;i+=3) {
    digitalWrite(trafficPins[i], HIGH);
  }
}
void loop() {
  for(int i=0;i<pinCount;i+=3) {
    digitalWrite(trafficPins[i], LOW);
    digitalWrite(trafficPins[i+2], HIGH);
    delay(timerRed);
    digitalWrite(trafficPins[i+2], LOW);
    digitalWrite(trafficPins[i+1], HIGH);
    delay(timerYellow);
    digitalWrite(trafficPins[i+1], LOW);
    digitalWrite(trafficPins[i], HIGH);
  }
}
```

4. **Controlling the LED blink rate with the potentiometer interfacing with Arduino.**

Requirements

1. Arduino Uno -1
2. Yellow Led -1
3. Pot -1
4. Resistor-1
5. Connecting wires

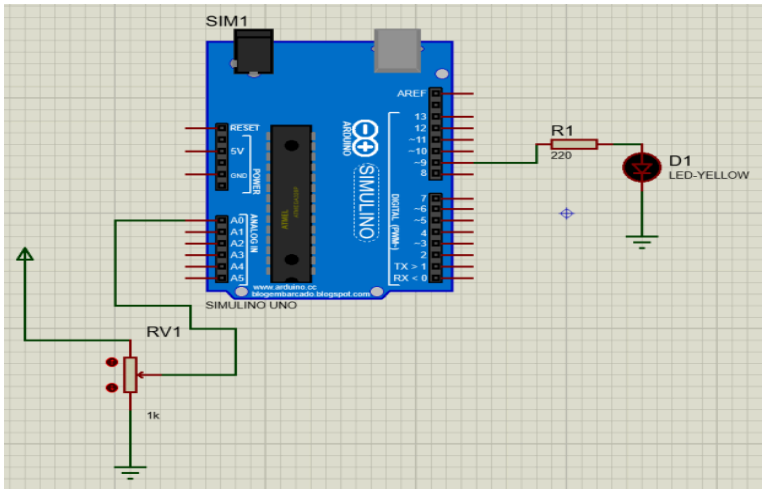


```
int potPin = A0;
int ledPin = 9;
void setup() {
  pinMode(ledPin, OUTPUT);
}
void loop() {
  int pwm = analogRead(potPin) / 3;
  if (pwm < 10) pwm = 0;
  analogWrite(ledPin, pwm);
}
```

5.Interfacing of temperature sensor LM35 with Arduino.

Requirements

1. Arduino Uno
2. LM35 – Temperature Sensor
3. LCD – 16 x 2 Display
4. Resistor – 3005P-1-103
5. Connecting wires

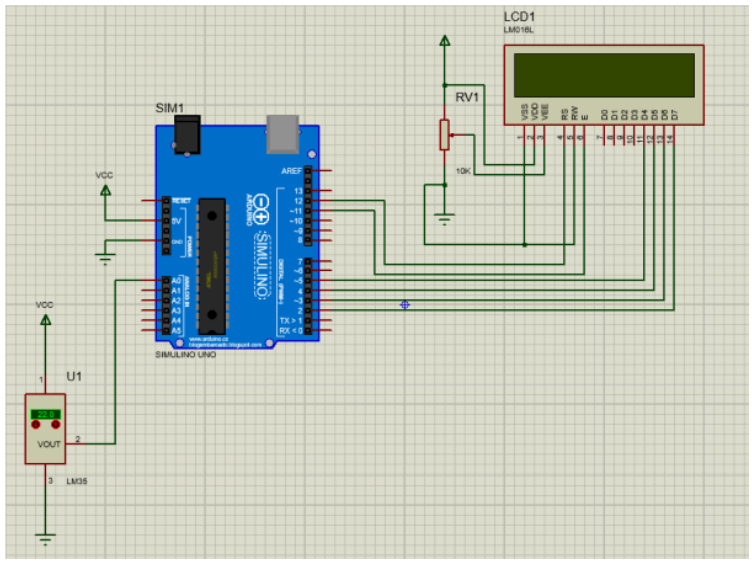


```
#include <LiquidCrystal.h>
LiquidCrystal lcd(12,11,5,4,3,2);
void setup() {
  lcd.begin(16,2);
}
void loop() {
  float t = analogRead(A0) * 500.0 / 1023;
  lcd.setCursor(0,0);
  lcd.print("C=");
  lcd.print(t);
  lcd.setCursor(0,1);
  lcd.print("F=");
  lcd.print(t * 1.8 + 32);
  delay(1000);
}
```

6.Interfacing Servo Motor with the Arduino.

Requirements

1. Arduino Uno
2. Servo- Motor – PWMServo
3. Connecting wires

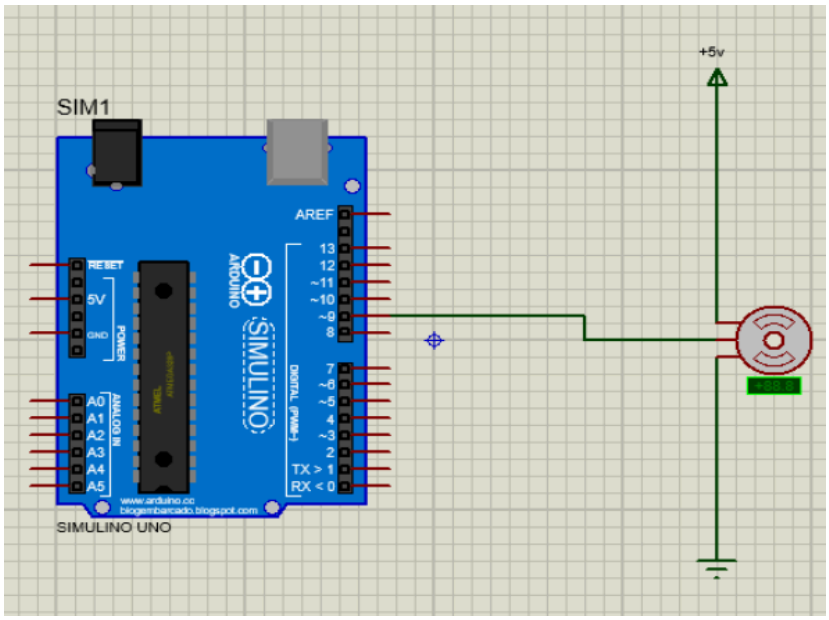


```
#include<Servo.h>
Servo myservo;
int pos=0;
void setup() {
  myservo.attach(9);
}
void loop() {
  for(pos=0;pos<=180;pos+=1){
    myservo.write(pos);
    delay(15);
  }
  for(pos=180;pos>=0;pos-=1){
    myservo.write(pos);
    delay(15);
  }
}
```

7.Interfacing of the Active Buzzer with Arduino

Requirements

1. Arduino Uno
2. Buzzer – Active one
3. Connecting wires

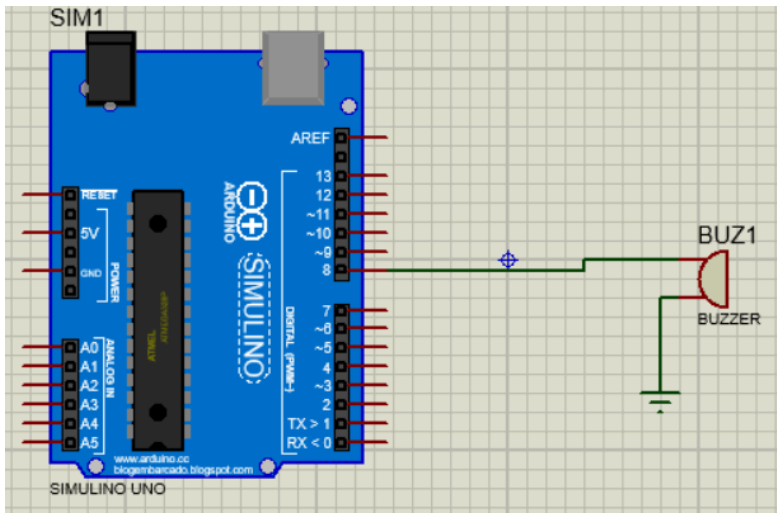


```
#define A3 220
#define B3 247
#define C4 262
#define G3 196
int m[]={C4,G3,G3,A3,G3,0,B3,C4},
d[]={4,8,8,4,4,4,4,4};
void setup(){}
void loop(){
  for(int i=0;i<8;i++){
    int t=1000/d[i];
    tone(8,m[i],t);
    delay(t*1.3);
  }
}
```

8.Interfacing of the Relay with Arduino.

Requirements

1. Arduino Uno
2. LAMP
3. Relay- Relay [Active- Animated Relay Model]
4. VSINE- sine wave AC voltage Source
5. Connecting wires

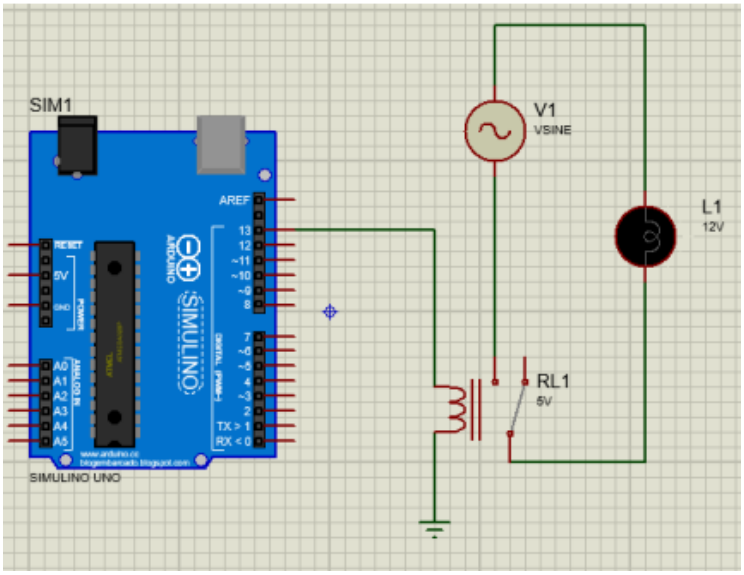


```
void setup() {
  pinMode(13, OUTPUT);
}
void loop() {
  digitalWrite(13, HIGH);
  delay(1000);
  digitalWrite(13, LOW);
  delay(1000);
}
```

9.Calculate the distance to an object with the help of an ultrasonic sensor and display it on an LCD.

Requirements

1. Arduino Uno
2. Ultrasonic Sensor
3. Virtual Display
4. Potentiometer - POT-HG
5. Connecting wires

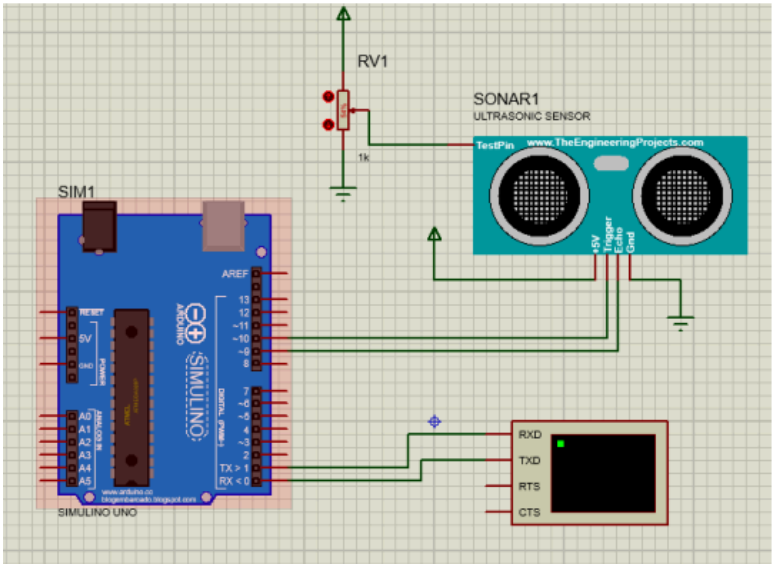


```
void setup(){
  pinMode(10,OUTPUT);
  pinMode(9,INPUT);
  Serial.begin(9600);
}
void loop(){
  digitalWrite(10,LOW); delayMicroseconds(2);
  digitalWrite(10,HIGH); delayMicroseconds(10);
  digitalWrite(10,LOW);
  Serial.println(pulseIn(9,HIGH)*0.034/2);
}
```

10.Smoke & Gas Leak Detector Using Arduino.

Requirements

1. Arduino Uno
2. Gas Sensor- M-2 Gas Sensor
3. led – any colour
4. Logic toggle
5. Connecting wires

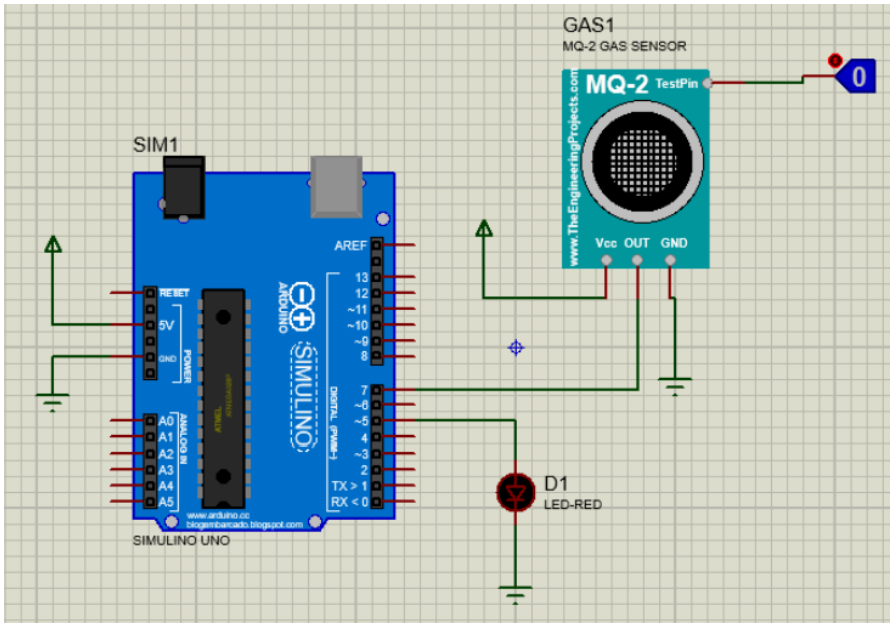


```
void setup() {
  pinMode(7,INPUT);
  pinMode(5,OUTPUT);
}
void loop() {
  if(digitalRead(7) == HIGH){
    digitalWrite(5,HIGH);
  }else{
    digitalWrite(5,LOW);
  }
}
```

11.Digital Stopwatch Using Arduino

Requirements

1. Arduino Uno
2. LCD – LM044L
3. Button
4. Connecting wires

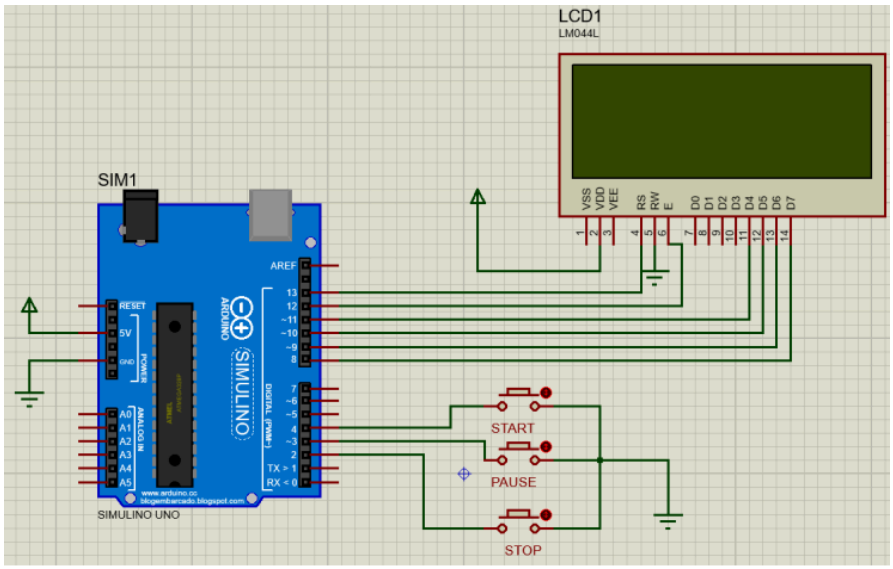


```
#include <LiquidCrystal.h>
#include <TimerOne.h>
LiquidCrystal l(13,12,11,10,9,8);
volatile int h = 0, m = 0, s = 0, ms = 0;
volatile bool r = false;
void setup() {
  pinMode(4, 2);pinMode(3, 2);pinMode(2, 2);
  l.begin(20, 4);l.setCursor(0, 0);l.print("DIGITAL STOP WATCH");
  Timer1.initialize(1000);
  Timer1.attachInterrupt(timerISR);
}
void loop() {
  if (!digitalRead(4)) r = 1;if (!digitalRead(3)) r = 0;if (!digitalRead(2)) h = m = s = ms = 0;
  l.setCursor(4, 2);
  l.print(h / 10); l.print(h % 10); l.print(":");
  l.print(m / 10); l.print(m % 10); l.print(":");
  l.print(s / 10); l.print(s % 10); l.print(":");
  l.print(ms / 100);l.print((ms / 10) % 10);l.print(ms % 10);
  delay(100);
}
void timerISR() {
  if(r && ++ms>999){ms=0;if(++s>59){s=0;if(++m>59){m=0;h++;}}}
}
```

12. Password Based Door Lock System Using Arduino

Requirements

1. Arduino Uno
2. LCD – LM016L
3. Motor-PWMSERVO
4. Keypad-PHONE
5. Connecting wires

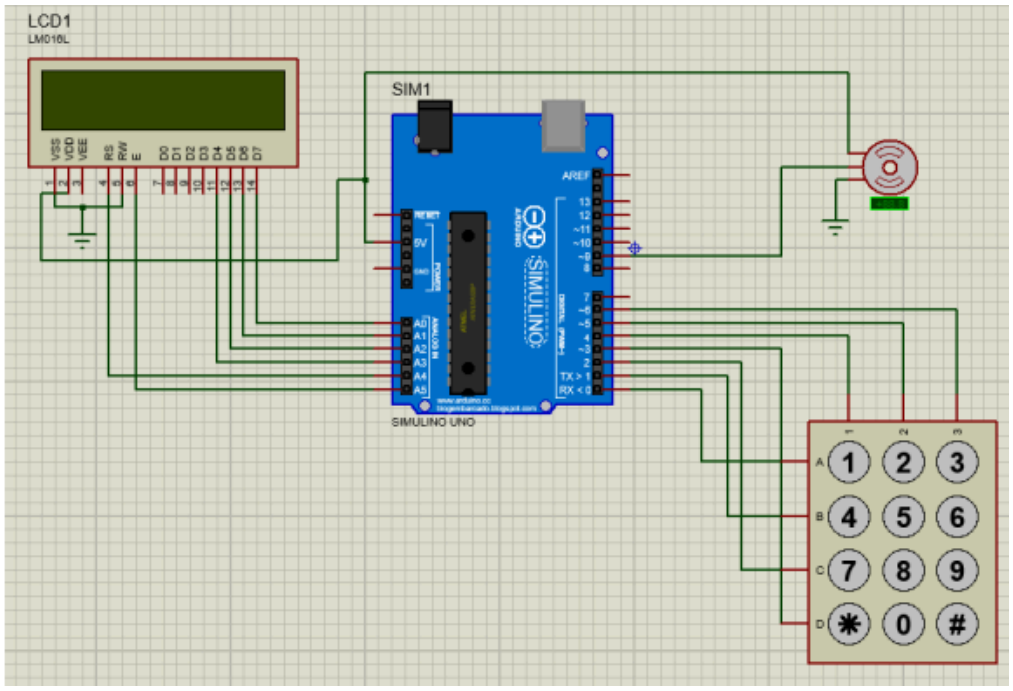


```
#include <LiquidCrystal.h>
#include <Servo.h>
#include <Keypad.h>

LiquidCrystal lcd(A4,A5,A3,A2,A1,A0);
Servo s;

char p[]="0123",k;
byte i=0,r[]={0,1,2,3},c[]={4,5,6};
char m[4][3]={{'1','2','3'},{'4','5','6'},{'7','8','9'},{'*','0','#'}};
Keypad kp=Keypad(makeKeymap(m),r,c,4,3);
```

```
void setup(){lcd.begin(16,2);s.attach(9);home();}

void loop(){
  if(!(k=kp.getKey())) return;
  lcd.clear();lcd.print("PASSWORD:");
  lcd.setCursor(0,1);for(byte j=0;j<=i;j++)lcd.print('*');

  if(k==p[i] && ++i==4) unlock();
  else if(k!=p[i-1]) wrong();
}

void home(){
  lcd.clear();lcd.print("ENTER THE CODE");
  lcd.setCursor(0,1);lcd.print("TO OPEN DOOR");
}

void unlock(){
  lcd.clear();lcd.print("ACCESS GRANTED");
  lcd.setCursor(4,1);lcd.print("WELCOME");

  for(int p=180;p>=0;p-=5){s.write(p);delay(5);}
  for(byte t=5;t;t--){lcd.clear();lcd.print("GET IN
WITHIN");lcd.setCursor(7,1);lcd.print(t);delay(1000);}
  for(int p=0;p<=180;p+=5){s.write(p);delay(15);}

  lcd.clear();lcd.print("LOCKED");delay(1000);i=0;home();
}

void wrong(){
  lcd.clear();lcd.print("WRONG PASSWORD");
  lcd.setCursor(0,1);lcd.print("GET AWAY!");
  delay(3000);i=0;home();
}
```

13.IoT Based Smart Farming System

Requirements

1. Arduino Uno
2. LCD – LM044L
3. CELL
4. LM35
5. LOGICSTATE
6. MOTOR
7. RELAY
8. POT-HG
9. Connecting wires

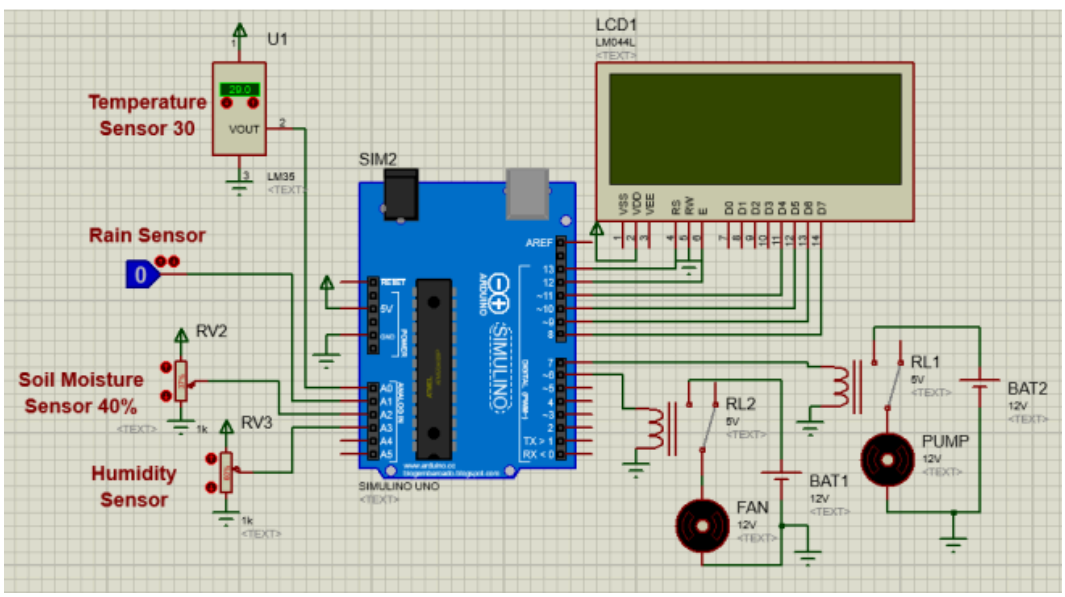


```
#include <LiquidCrystal.h>

LiquidCrystal lcd(13,12,11,10,9,8);
#define FAN 6
#define PUMP 7
```

```
void setup(){
  lcd.begin(20,4);
  lcd.print("IoT SMART FARMING");
  pinMode(FAN,OUTPUT); pinMode(PUMP,OUTPUT);
  pinMode(A1,INPUT);
}

void loop(){
  int T=(analogRead(A0)*5000.0/1023)/10;
  int R=digitalRead(A1);
  int S=analogRead(A2)/10;
  int H=analogRead(A3)/10;

  lcd.setCursor(0,1); lcd.print("T="); lcd.print(T); lcd.print("C ");
  lcd.setCursor(10,1); lcd.print(R?"R=YES":"R=NO ");

  lcd.setCursor(0,2); lcd.print("S="); lcd.print(S); lcd.print("% ");
  lcd.setCursor(10,2); lcd.print("H="); lcd.print(H); lcd.print("% ");

  digitalWrite(FAN,T>30);
  lcd.setCursor(0,3); lcd.print(T>30?"Fan:ON ":"Fan:OFF");

  digitalWrite(PUMP,S<40 && !R);
  lcd.setCursor(10,3); lcd.print(S<40 && !R?"Motor:ON":"Motor:OFF");
}
```

14.Patient Health Monitoring System Using Arduino.

Requirements

1. Arduino Uno
2. LCD – LM044L
3. LM35
4. BUTTON
5. Heart Beat Sensor
6. Pot HG
7. Connecting wires

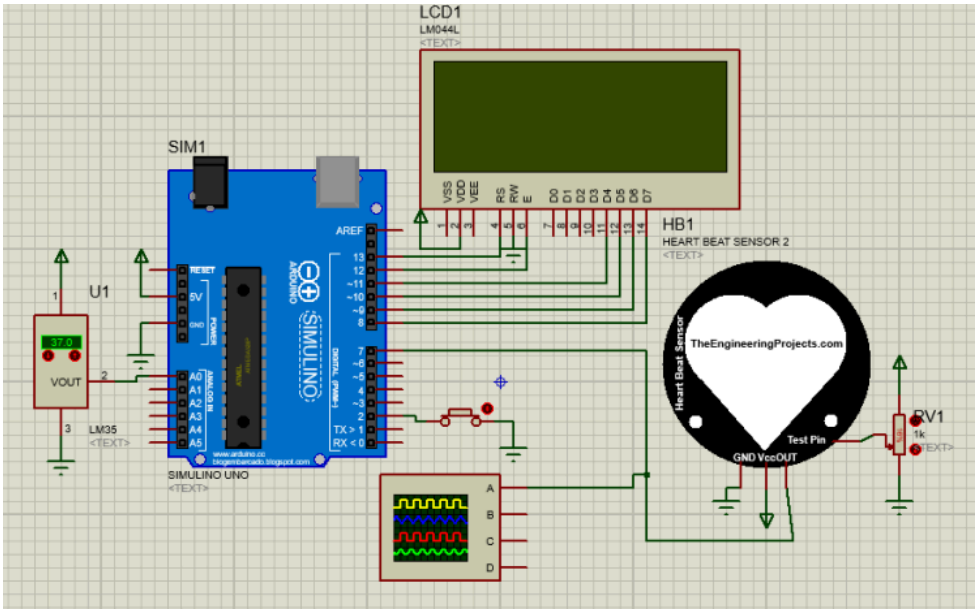


```
#include <TimerOne.h>
#include <LiquidCrystal.h>
LiquidCrystal l(13,12,11,10,9,8);
#define T A0
#define H 7
#define S 2
volatile int s=0;
int c;
bool r=0,hb=0;
```

```
void setup(){
  l.begin(20,4);pinMode(H,INPUT);pinMode(S,INPUT_PULLUP);
  Timer1.initialize(1000000);
  Timer1.attachInterrupt(isr);
  l.print("HEALTH MONITORING");
  l.setCursor(0,1); l.print("TIME IN SEC : ");
  l.setCursor(0,2); l.print("HB PER MIN : ");
  l.setCursor(0,3); l.print("BODY TEMP : ");
}
void loop(){
  l.setCursor(14,3);
  l.print((analogRead(T)*500L)/1023); l.print(" ");
  if(!digitalRead(S)) r=c=s=0, r=1;
  if(r){
    bool x=digitalRead(H);
    if(x && !hb) c++;
    hb=x;
    if(s>=15){
      l.setCursor(14,2);l.print(c*4); l.print(" ");r=0;
    }
  }
  delay(20);
}
void isr(){
  if(r){l.setCursor(14,1);l.print(++s); l.print(" ");}
}
```

15. Interfacing the regular USB webcam with the device and capturing the image.

Requirements

1. Raspberry pi
2. Pi camera- picamera
3. Button- break through
4. LCD- TFT LCD
5. Image with extension of .png

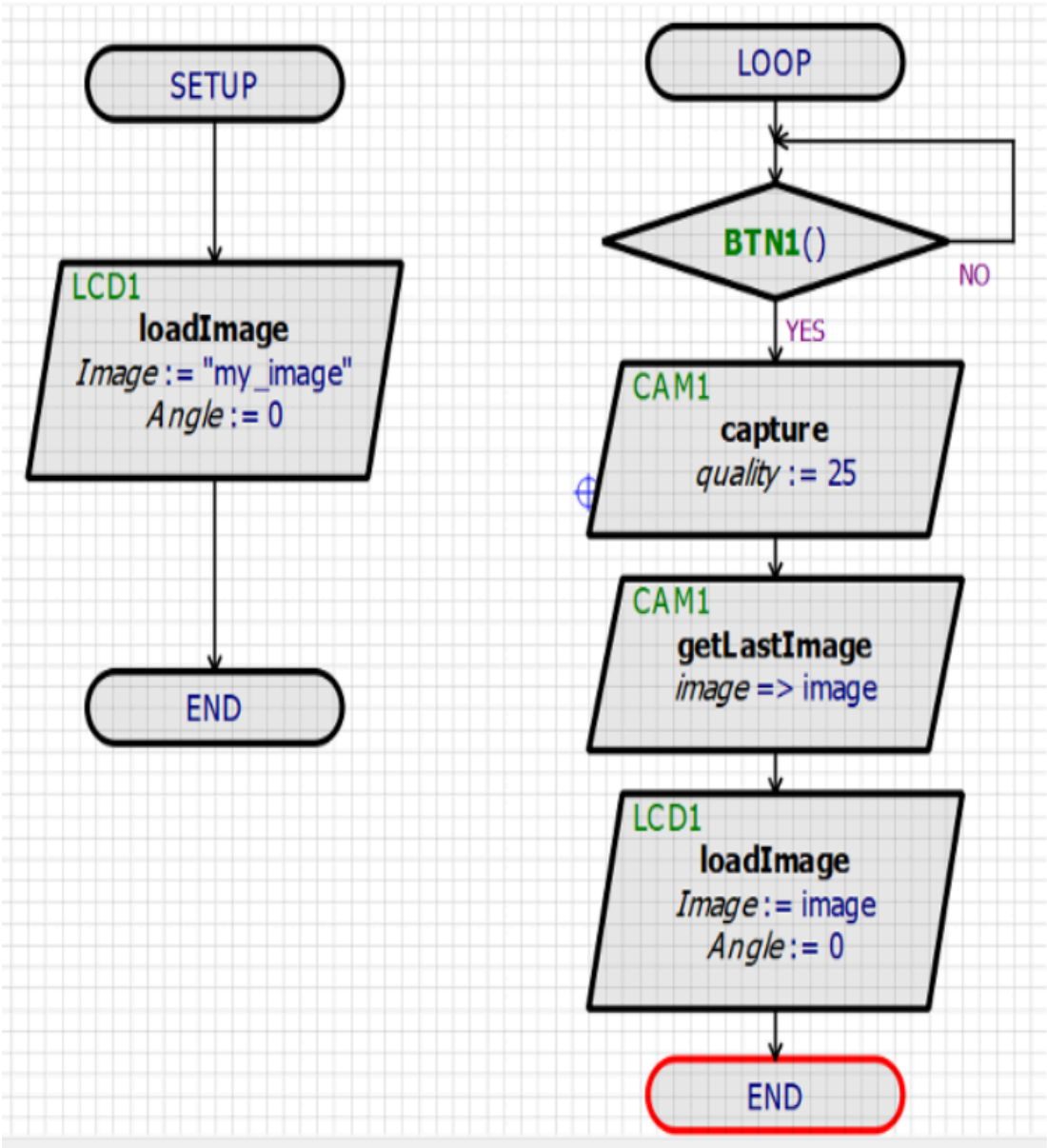

16. Build a circuit using Arduino based weather reporting over IOT

Requirements

1. Arduino Uno
2. Soil Moisture sensor
3. Rain sensor
4. DHT11
5. LDR-LDR – Generic model
6. LCD- LM044L (20x4 Alphanumeric lcd)
7. Capacitor -CAP
8. Potentiometer - POT-HG
9. Inductor – Inductor Primitive
10. Logicstate – Active
11. Connecting wires

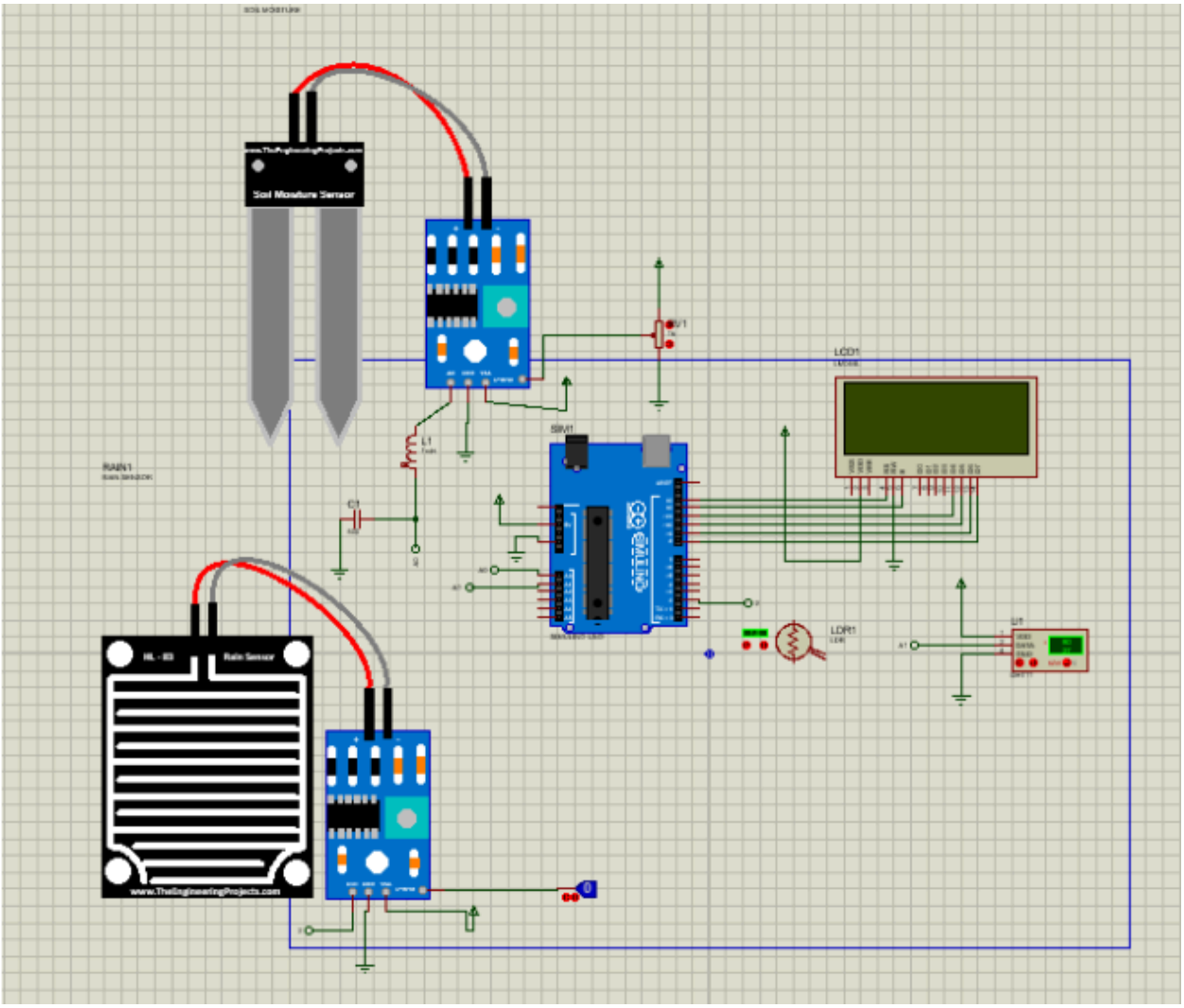

```
#include <LiquidCrystal.h>
#include <DHT.h>

LiquidCrystal lcd(13,12,11,10,9,8);
DHT dht(A1,DHT11);

void setup(){
  lcd.begin(20,4);
  pinMode(2,INPUT);
  lcd.print("Weather Report");
  dht.begin();
  delay(2000);
}

void loop(){
  lcd.setCursor(0,1);
  lcd.print("Soil:"); lcd.print(map(analogRead(A0),0,1023,0,100));
  lcd.print("%");

  lcd.setCursor(0,2);
  lcd.print("TM:"); lcd.print(dht.readTemperature()); lcd.print("C");

  lcd.setCursor(10,2);
  lcd.print("HM:"); lcd.print(dht.readHumidity()); lcd.print("%");

  lcd.setCursor(0,3);
  lcd.print(digitalRead(2)?"Rain Detected":"No Rain");

  delay(1500);
}
```