Professional Certificate of Competency in Electrical Power System Fundamentals for Non-Electrical Engineers

Webinar 1

Module 1: Basic Concepts

Module 1 Topics

- Theory of charges and current flow
- Electrical parameters
- Ohm’s law
- Single-phase and three-phase systems

Electric Charge

Two types:

- Positive charge
- Negative charge

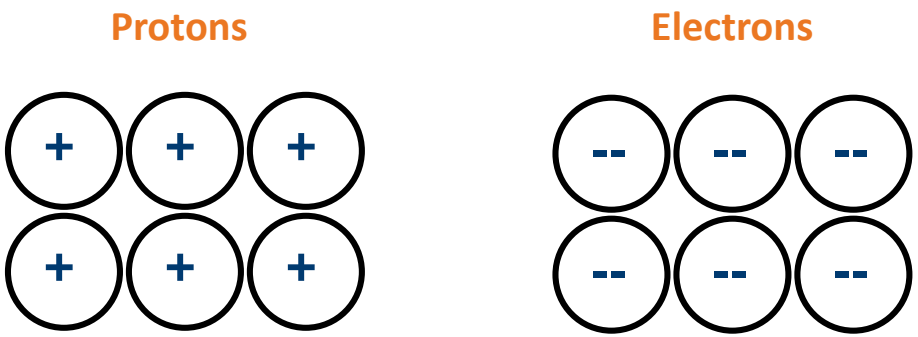

- Unit of charge is the Coulomb (C)

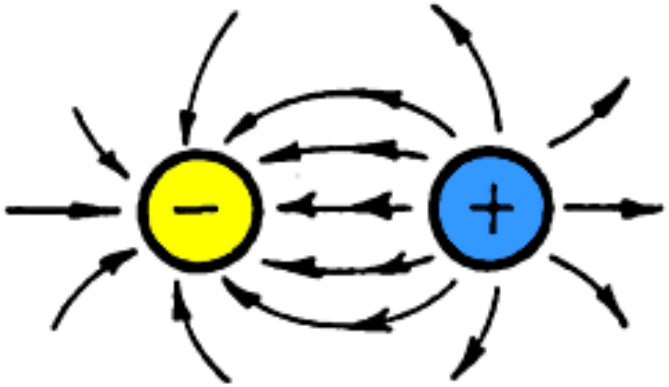

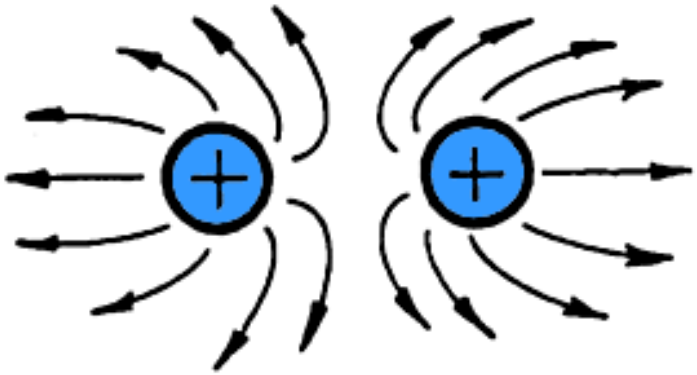

Electric Current

Electric current is **the flow or movement of charge through a material.**

- Commonly, charge is carried by a flow of electrons in a conductor such as a wire.
- An amount of energy is needed to move the electrons (flow of current). Potential difference or voltage is that energy or electric force needed / maintained for the current to flow.
- Current is measured in terms of rate of flow of charge per second i.e. one unit of current is one coulomb per second.
- Accordingly, the unit of measure for current is Coulombs/sec (C/s) or Amperes [A].

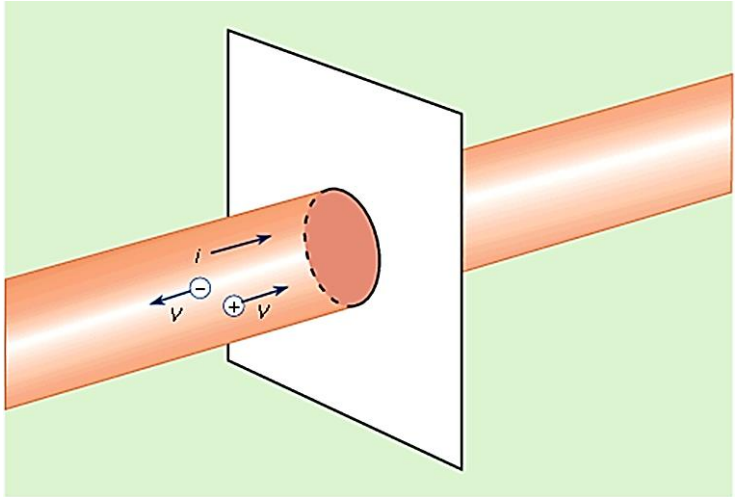

Definitions

Voltage: the pressure in a circuit to move electrons. Also known as potential difference. Expressed in volts (V).

Current: the movement of electrons. Expressed in Amperes (A). Takes the path of least resistance.

Resistance: the resistance opposing the flow of current (Ω).

Electrical Quantities and Units

Quantity	Abbreviation in equations	Unit	Unit abbreviation
Voltage	V	Volts	V
Current	I	Amperes	A
Resistance	R	Ohm	

Potential Difference

- Current flows through a component when there's a potential difference (voltage difference) across it with the quantum of current being based on the resistance of the component.

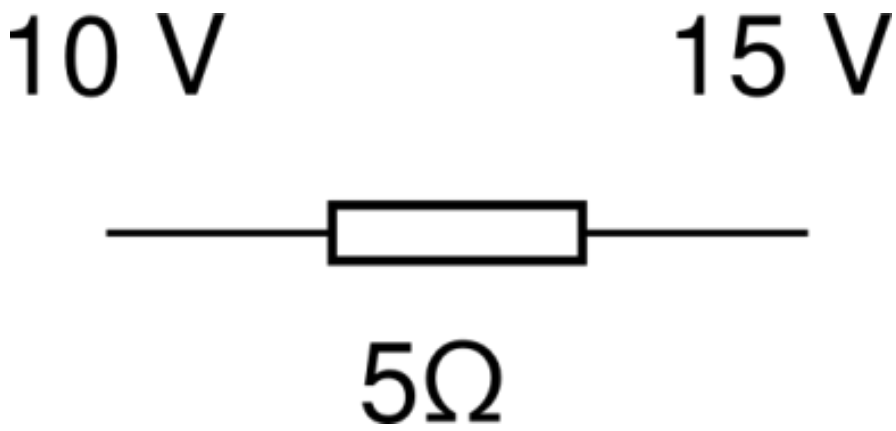

Electric Circuits – Basic Circuit (Closed)

- If the current path is complete then the circuit is considered closed and current will flow.
- A closed circuit is considered to be a continuous current path.
- A closed circuit will occur when a component in the circuit is switched on. For example, flicking the switch and turning a light on.

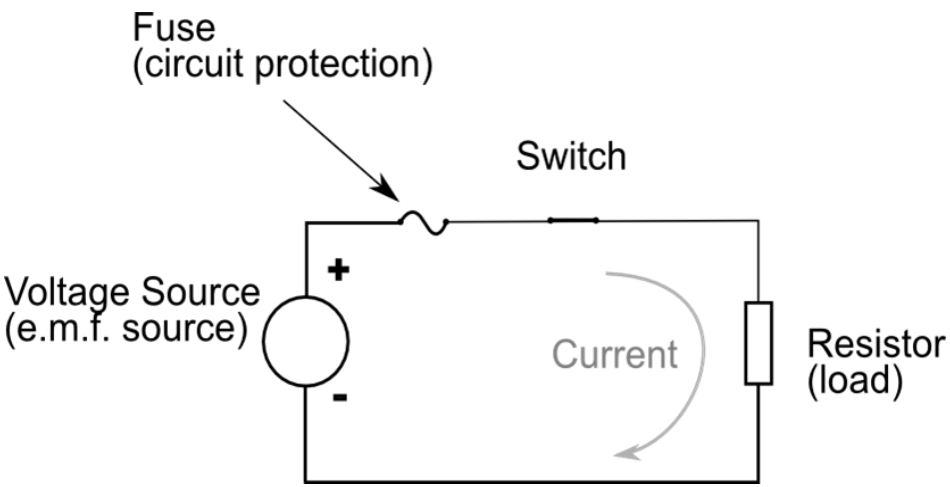

Electric Circuits – Basic Circuit (open)

- An open circuit will occur when there is a break in the circuit (current path is not continuous).
- No current will flow when there is an open circuit.
- Open circuits can be created by a switch (manually) or by melting fuse (preset protection level).

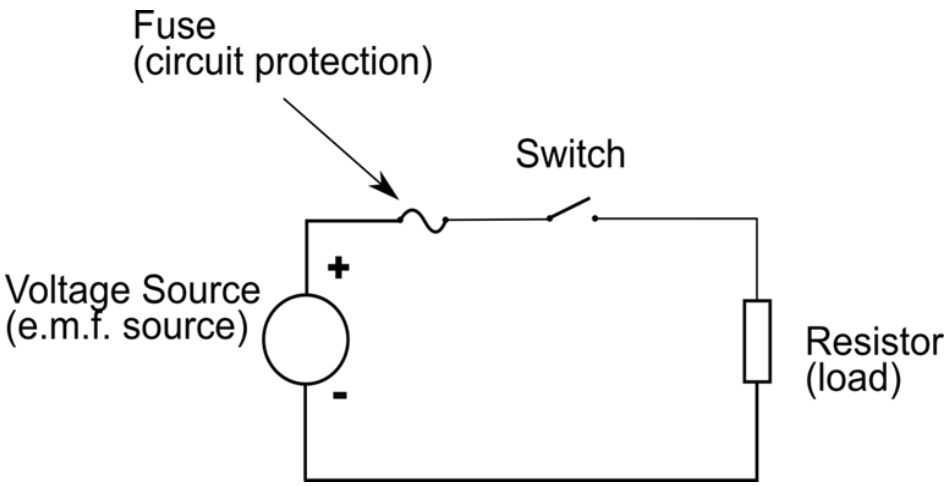

Electric Circuits – Basic Circuit (short)

- Short circuits happen when a lower resistance connection occurs across the load (or a source).
- This results in higher current and is usually dangerous.

What current flows through the shorted resistor in the below circuit?

Answer: None or little, as electricity takes the path of least resistance.

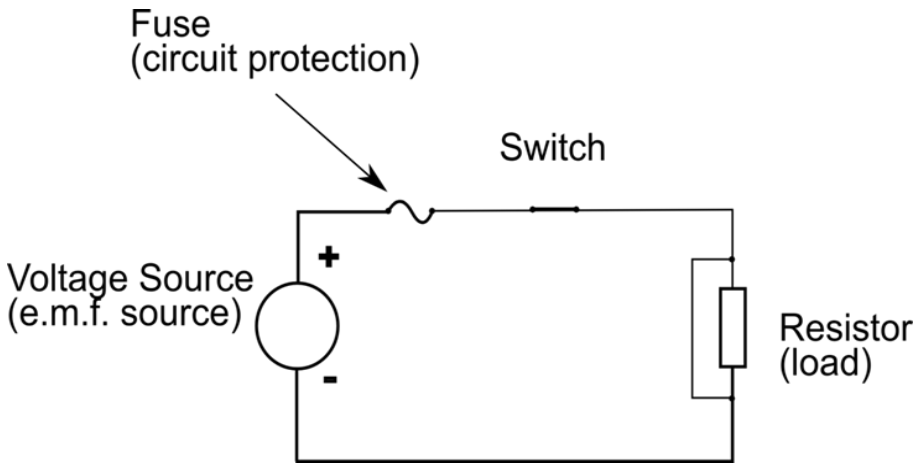

Conductors and Insulators

- Conductors are atomically organized and give up electrons easily that are vital for flow of electricity.
- Insulators have the opposite characteristics of a conductor. No electrons or very few free electrons
- Nevertheless insulators also may start conducting Electricity if a high enough voltage is applied that varies among insulators (“breakdown” voltage).
- Insulators are needed for safe distribution of electricity through the conductors.

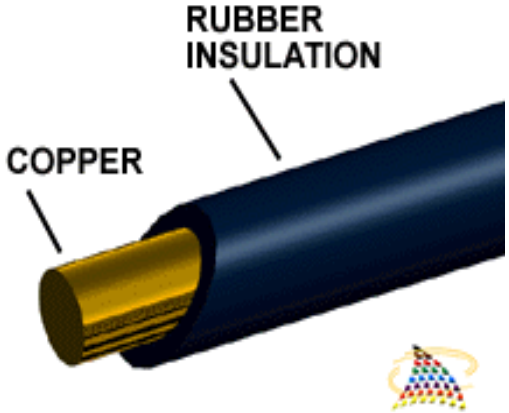

Ohm's Law

The current flowing between any two points in an electric circuit is proportional to the potential difference between these points, and also inversely proportional to the resistance of the circuit between these two points.

- Current across two points is proportional to the voltage applied across the points. When voltage goes up, current also goes up and vice-versa

$$I \propto V$$

- Current flow in a circuit is inversely proportional to its resistance. When the resistance goes up current goes down and vice versa

$$I \propto \frac{1}{R}$$

$$\propto = \text{proportional to}$$

Ohm's Law Formulae

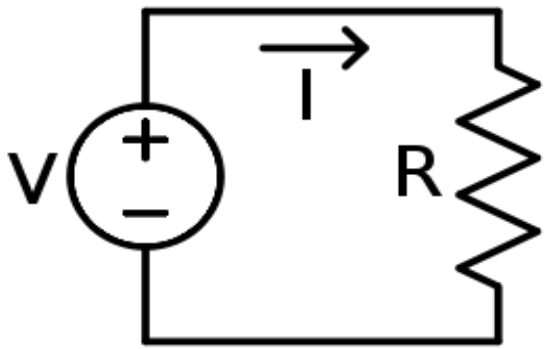

$$V = I R$$

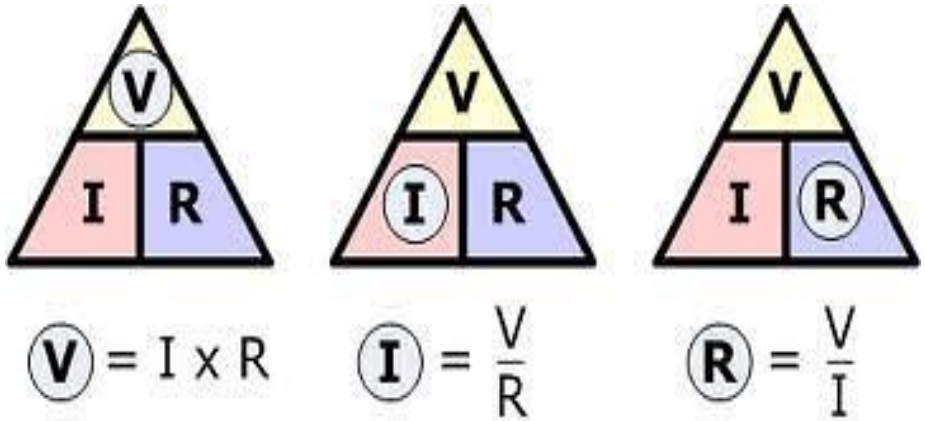

Image from: https://sites.google.com/site/kullenbaileyradphysics/introduction-page

Electrical Power

Defined as **the amount of work done by an electric current per unit time.**

- A definite quantum of power is needed for a current to flow in a circuit overcoming the resistance

Power = Voltage x Current

P = VI

- As per Ohm's law: ***V = IR*** and ***I = V/R***
- Therefore $P = I^2 R$

  $P = V^2 / R$
- Unit of power is **Watt.**

Calculating Power

Example:

A dc circuit supplied by a 500 V supply system is connected to a pure resistance of 50 Ohms. What are the values of current and power in the circuit?

Current I = V / R = 500 / 50 = 10 A

Power P = VI= 500 × 10 = 5000 W or 5 kW

Electrical Energy

Electrical energy is the electrical power dissipated in a circuit over a period of time (seconds or minutes or hours).

- A unit of electrical energy is commonly expressed in Kilowatt-hour (kWh) and in small circuits it may be expressed in watt-hours.

$$\boldsymbol{E = P \times t}$$

Where E = Electrical Energy

P = Power flowing in the appliance (kW or W)

t = Time duration of power consumption (always in Hours)

Calculating Energy

A room has 3 nos. 40W lamps and 1 no. 60 W fan. On a given day, the lamps were continuously used for 6 hours and fan was run for 5 hours during occupancy.

Total energy consumed= 3 nos. x 6 hours x 40W for lamps + 1 no. x 5 hours x 60W for fan

= 720 + 300

= 1020 Wh

= 1.02 kWH

Electrical Loads

Electrical energy can be converted into other energy forms. Observing every day items in your household it can be seen how electrical energy can be converted into other energy forms:

- **Toaster:** Converts electrical energy to heat energy
- **Light bulb:** Converts electrical energy to light energy

DC and AC

- **Direct current** is a continuous current per unit of time with steady value
- **Alternating current** varies per unit time sinusoidally over this time and repeats.

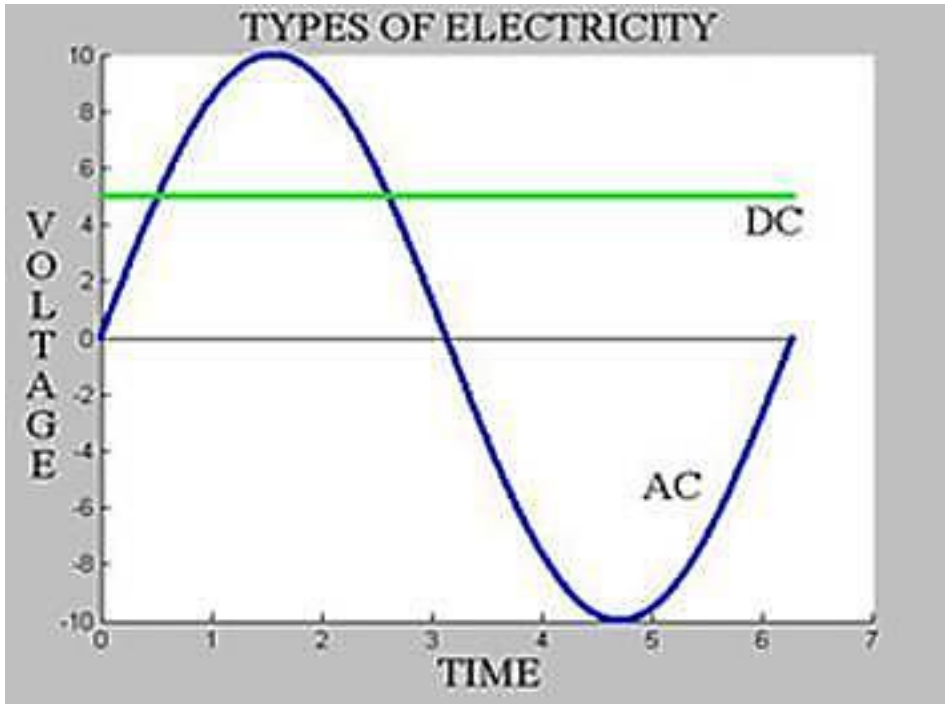

DC and AC Power Sources

- **Batteries** are the main sources of dc power which use the principle of *conversion of chemical energy into electrical energy.*
- Dc power has limitations in respect to the size for generating and distributing large quantum of electrical power.
- Ac power is generated by converting *mechanical (rotating) energy to electrical energy.* With the invention of transformers, ac power has become the main source for generation and distribution.

Typical AC Wave Form and Frequency

- A **period (T)** is the smallest interval of time taken for the sine wave to complete one full cycle. When a cycle is completed, the sine wave begins to repeat the quantities.
- **Frequency** of the ac wave refers to the number of full cycles that occur in one second. The unit of frequency (f) is cycles per second or more commonly known as Hertz (Hz). Shown below is the single phase ac wave with a frequency of 50 cycles per second., where its **f = 1 / T.**
- 50 Hz is the frequency of the ac voltage in most countries around the world, including Australia.
- In USA and a few other countries, 60 Hz is the ac standard.

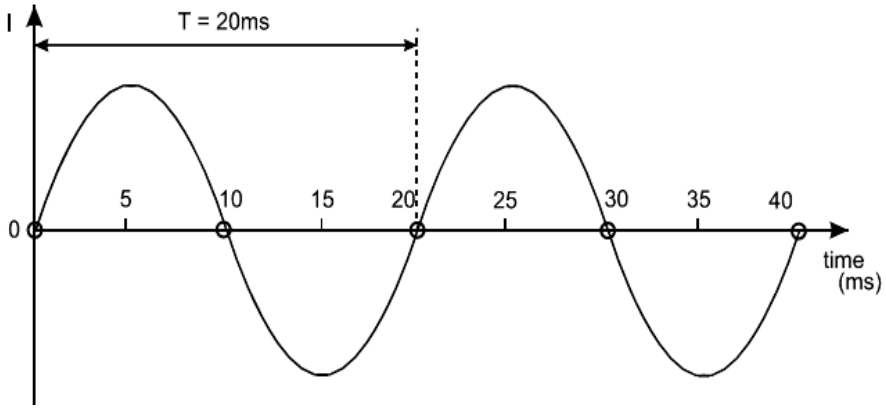

Peak Value

Peak value:

- The peak value of a sine wave is the maximum value that the current or the voltage reaches with respect to zero.
- The polarity is not important, because the negative and the positive peak have identical values for a standard ac wave. Peak values are designated V_p and I_p for peak voltage and peak current, respectively.

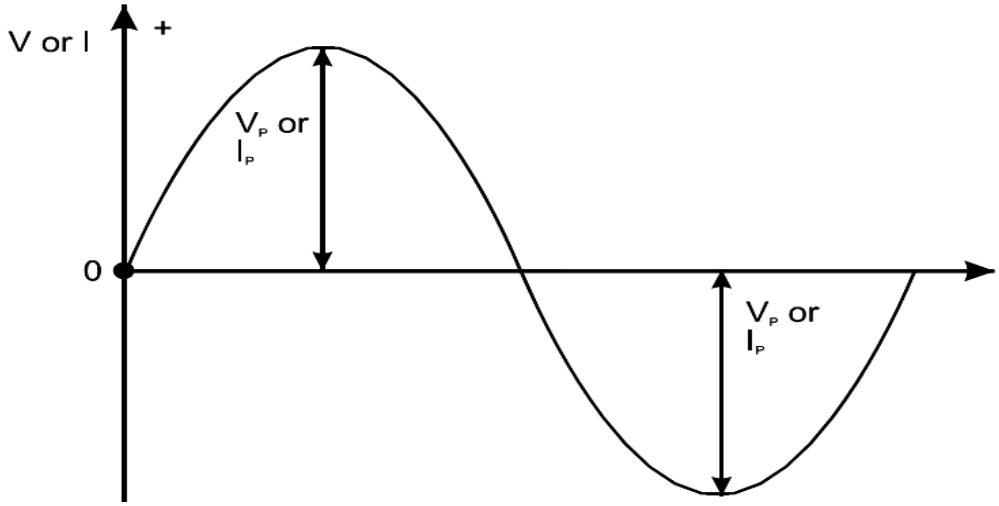

Root Mean Square (RMS) Value

- The RMS value is also equivalent to a DC value that produces the same heating effect in a circuit (say heater)
- Assuming Q is the heat produced by an alternating current over a period, it is possible to find an equivalent dc source producing same heat Q over the same period in the same circuit. Accordingly AC RMS value is also defined as equal to the value of DC producing same heat in the same load for the same time by the ac source.
- RMS voltage/current in terms of peak values are as below:

$$I = \frac{Ip}{\sqrt{2}} = 0.707Ip \qquad V = \frac{Vp}{\sqrt{2}} = 0.707Vp$$

- V and I values referred in AC circuits are always RMS values.

Voltage and Current waveforms

- In ac circuits, the voltage and current do not have identical or same zero crossing points.
- Depending on the time of current crossing zero with respect to the voltage crossing zero, the current could lag or lead the voltage in an ac circuit.
- The angle Ø or θ (commonly used symbols) by which current lags the voltage is called power factor angle.

Power Components

- Due to the periodic variation of voltage/current, there are three components of power in ac circuits taking into account the angle θ.
- Active power (P) – measured in Watt, kW, MW
  - In phase with the applied voltage (V)
- Reactive power (Q) – measured in VAr, kVAr, MVAr
  - Not in phase with the applied voltage (V)
- Apparent power (S) – measured in VA, kVA, MVA
  - It is the vector sum of active and reactive power

AC Power Triangle

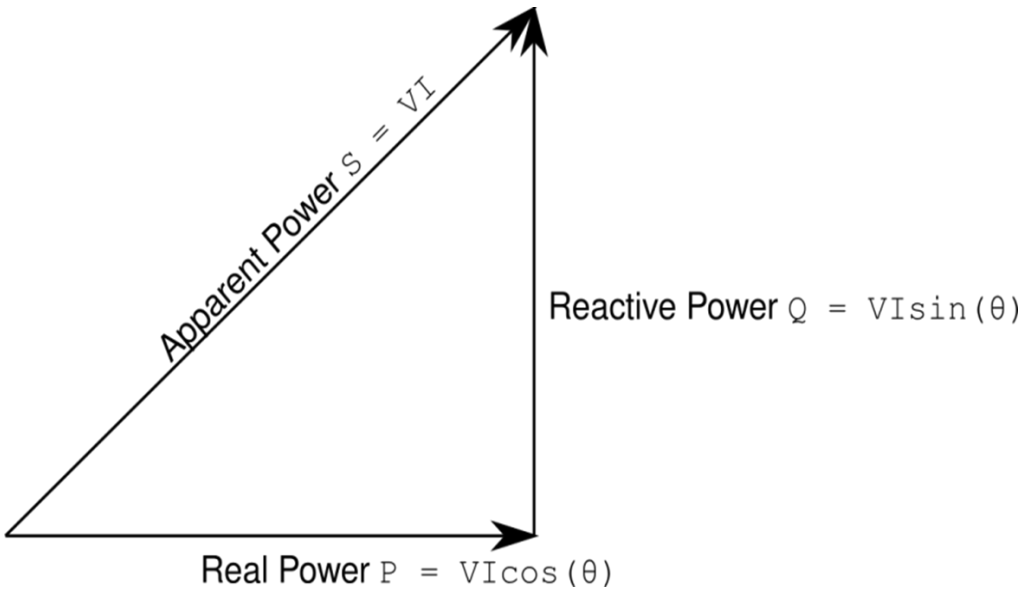

Beer Analogy of Active, Reactive & Apparent Power

Three-Phase Circuits

- There are three-phase conductors identified generally as R, Y and B or A, B, and C or U, V and W.
- With 360 degrees being the period of one full ac cycle, the three phases are 120 degrees out of phase with each other (360 divided by 3).
- Three-phase systems can be connected in Delta (Δ) OR Star (Y) form with three or four conductors.
- The fourth conductor is usually possible in a Y system and called the **neutral.**

One Voltage Cycle of a Three-phase

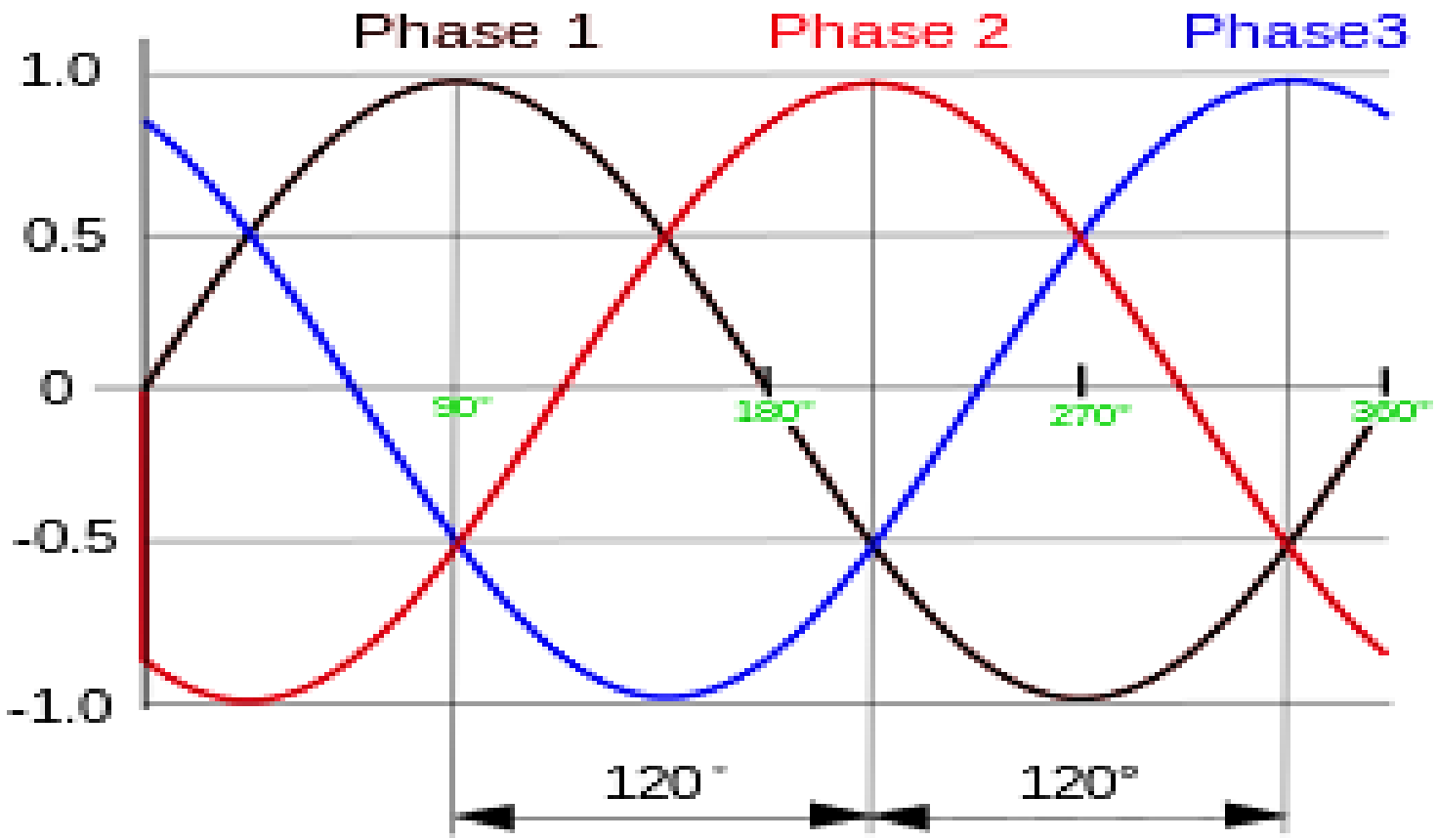

Y Connection

- In a Y system with 4 conductors, the voltage between phase conductor and neutral is called phase voltage while voltage between phases (RY, YB, BR) is called the line voltage.
- The line voltage is higher than the phase voltage by a factor of $(\sqrt{3})$ or 1.732.

$$V_L = V_{ph} \times \sqrt{3}$$

- The line current is equal to the phase current.

$$I_L = I_{ph}$$

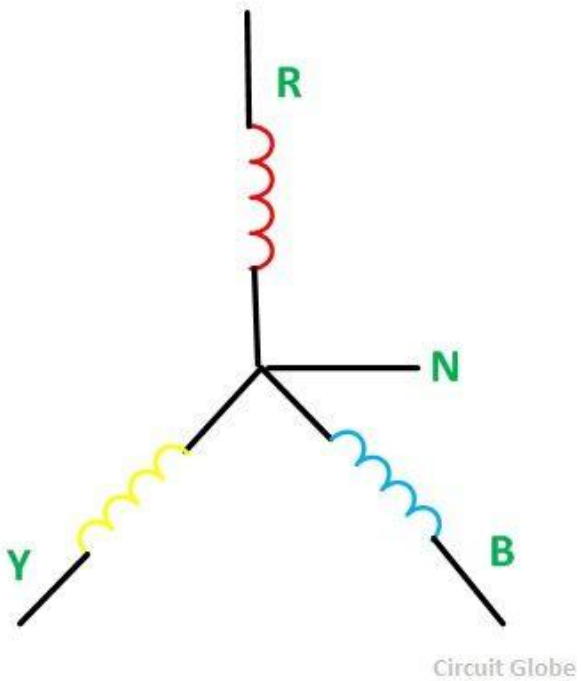

Delta Connection

- The line voltage equals the phase voltage.

$$V_L = V_{Ph}$$

- The line current is higher than the phase current by a factor of $(\sqrt{3})$ or 1.732.

$$I_L = I_{Ph} \times \sqrt{3}$$

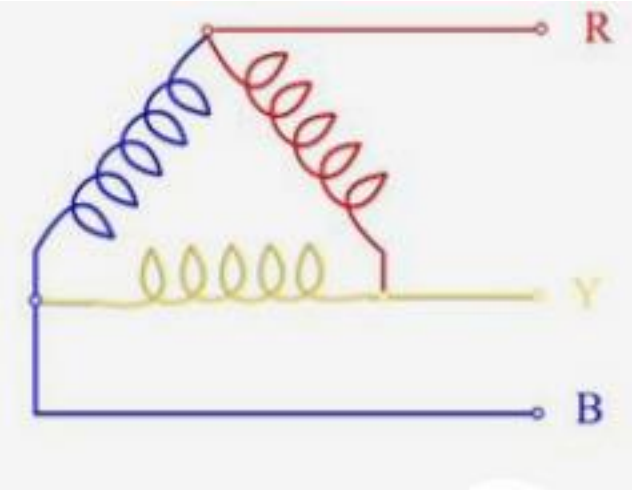

3 phase Power Components

Real Power = $P_T = \sqrt{3} V_L I_L \cos\theta$

Unit is W with V in Volts and I in amperes

Reactive Power = $Q_T = \sqrt{3} V_L I_L \sin\theta$

Unit is VAR with V in Volts and I in amperes

Apparent Power = $S_T = \sqrt{3} V_L I_L$

Unit is VA with V in Volts and I in amperes

Beer Analogy of Active, Reactive & Apparent Power

Advantages of Three-phase Systems

- A three-phase line requires less conductor material than a single phase line for transmitting the same amount of power at the same voltage.
- For a given frame size a three phase machine gives a higher output than a single phase machine and also takes more load than single phase.
- Three-phase motors are self starting and are more efficient while single phase motors are not self starting and are less efficient.

AC Circuit Components

The **three main components** in a typical ac circuit are:

1. Resistance (R)
2. Inductance (L)
3. Capacitance (C)

- In a pure ac resistive circuit, *current is in phase with voltage.*
- In an ac circuit with dominant inductance, *current lags the voltage.*
- In an ac circuit with dominant capacitance, *current leads the voltage.*
- The units of inductance and capacitance are Henry and Farad respectively.

Resistance of a Conductor

- Resistance *R* of a conductor is given by:

$$R = \frac{\rho l}{A}$$

Where:

$R = resistance\ in\ Ohms\ (\Omega)$
$\rho = resistivity\ in\ Ohm \cdot metres\ (\Omega \cdot m)$
$l = length\ in\ metres\ (m)$
$A = area\ in\ square\ meters\ (m^2)$

- **The higher the cross-section, the lower the resistance.**

Inductance

The electric current through the conductor creates a magnetic flux.

- Inductance (L) results from the magnetic field around a current-carrying conductor and its value depends on the material and construction
- Inductance is determined by how much magnetic flux φ is created by a given current through the circuit. The higher the flux, the higher the inductance.

Capacitance

A **capacitor** is a two-terminal electrical component used to store electrical energy temporarily in an electrical field.

- They contain two plates separated by an insulation medium that can store energy by becoming polarised.

Capacitance and Charge Relationship

$$Q = CV$$

Where:

$$Q = charge\ in\ coulombs\ (C)$$

$$C = capacitance\ in\ Farads\ (F)$$

$$V = voltage\ in\ volts\ (V)$$

Capacitors - Energy

$$E = \frac{1}{2} C V^2$$

Where:

$$E = energy\ in\ Joules\ (J)$$

<u>Example:</u>

If C=100 milli F; V = 200V

Then E= ½ x 100 x 200 x 200/1000 = 2kJ

End of Webinar 1

Any questions or comments?