Professional Certificate of Competency in Electrical Power System Fundamentals for Non-Electrical Engineers

Webinar 3

Module 3: Electrical Distribution

Module 3 Topics

- Electrical distribution systems
- Substations and transformer fundamentals
- Distribution substations
- Distribution feeder supply configurations: radial, parallel and ring
- Switchgear construction and components

Governing Principles of Power Distribution

- Safety of operating personnel and plant assets
- Reliable power supply (continuity of power)
- Adequate quality of power
  - Constant voltage and frequency conditions within a permissible band
  - Prevention of load generated problems
- Efficiency (low losses)

Main Distribution Equipment

- Circuit isolation devices (switches)
- Circuit protection devices (Fuses, circuit breakers)
- Transformers
- HV and LV distribution feeder panels
- Motor control panels
- Dc supply system
- Power system protection
- Cable (or overhead line based) distribution systems
- Earthing system
- Power quality improvement equipment

Voltage Classification and Levels

- Circuits supplied and distributed at nominal voltage up to and including 1000 V ac or 1500 V dc are said to be in the low voltage range, and equipment rated for voltages above these values are classified as **medium** (MV) and **high voltage** (HV) equipment.
- Typical **commonly used ac voltages:**
  - Low voltage: 220-240 V, 380 V, 415 V, 690 V (max. system voltage 1000 V)
  - Medium voltage: 3300 V, 6600 V, 11000 V, 22000 V, 33000 V
  - High voltage: 66 kV, 110 kV, 132 kV, 220 kV, 400 kV, 800 kV

Transformers in Substations

- Transformers step-up or step-down incoming ac voltage for further distribution.
- Step up transformers required in power generation plant substations as the generator voltage is limited to around 24 kV and needs to be stepped up for grid connections.
- Step down transformers are used in local area distribution substations to enable further distribution within the area.
- Voltage control with **on load tap changing** (OLTC) option is considered for larger **power** transformers as well as large industrial plants that automatically changes the taps on HV side to maintain nominal output voltage.
- Normally all **distribution** transformers are provided with tap changing provisions on HV side for +/- 5% variation of input voltage to get required output voltage. Tap change in **off circuit condition** only.

Benefits of Transformers

- Voltage generated in the Medium Voltage range is transmitted over long distances at 220 KV to 800 KV by using transformers (step-up) thereby reducing the transmission losses and using nominal size conductors.
- The industries and utilities have to reduce these voltages at the load ends to get the nominal operating voltages which again is achieved by simply using (step-down) transformers.

Substations

Transformers are one component of substations.

Substation **functions:**

- Using transformers: Change voltage from one level to another and regulate voltage to compensate for system voltage changes.
- Using switchgear (switches, fuses or circuit breakers): Switch transmission and distribution circuits into and out of the grid system.
- Using meters and controls: Measure and control flow of electric power.
- Ensure continuous power supply to the consumers by continuous monitoring and proper maintenance.

Outdoor Substation – Clearances in Air

Indoor Substations

- To minimise space constraints associated with outdoor stations, indoor substations for higher voltage applications are adopted with Gas Insulated Switchgear (GIS) due to lower clearances.
- Generally, transformers are mounted outdoor as the capacities do not permit them being indoor with cable termination.
- The major advantages are space saving and reduced exposure to salt spray and pollution.

Distribution Substations

- Change the transmission or sub-transmission voltage to lower levels for use by end-users.
- Power is distributed to industrial, commercial, and residential customers.
- Can use medium voltage to low voltage step down transformers
- **Mounting in pole mount or padmount (ground mount kiosk) versions.**

Types of Distribution

- Radial
- Parallel
- Ring type

Radial

- A single incoming feeder
- Supply failure causes total disruption
- Restoration only after the problem is rectified
- Not desirable where critical production processes are involved
- If required, internal standby source to be planned
- Rural areas with low customer density

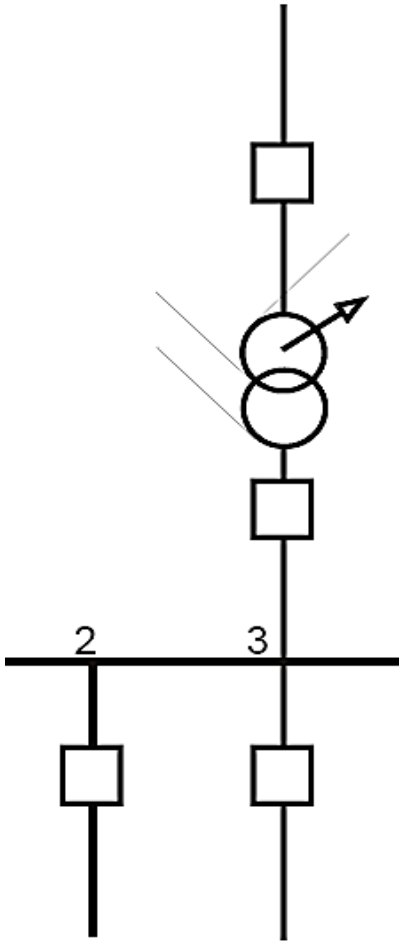

Parallel

- Two incoming feeders
- Any one feeder used at a time and selected based on availability
- Manual or automatic restoration schemes to switch feeders
- Reduces time of interruption
- High value industries

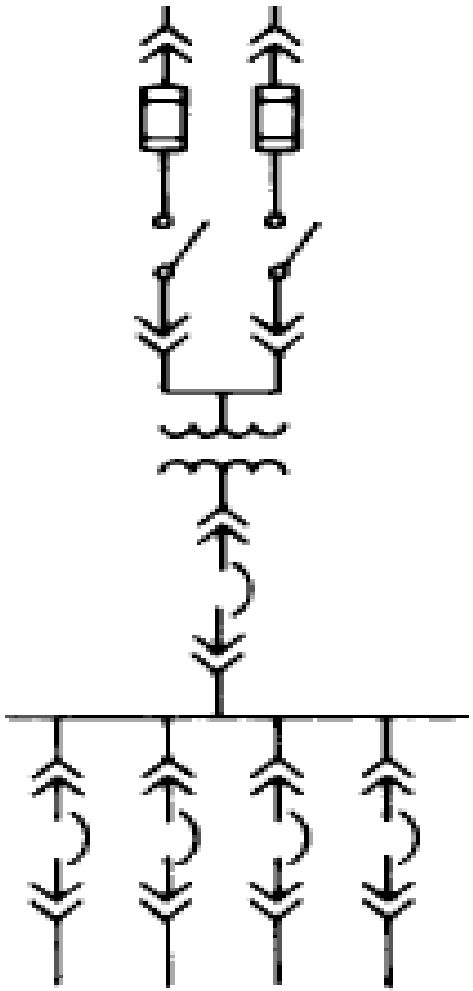

Ring (loop)

- Primary network arranged in the form of a loop to ensure multiple connections for loads
- In the event of a failure in one of the incoming sources or any of the loop sections, at least one feeder can be maintained.

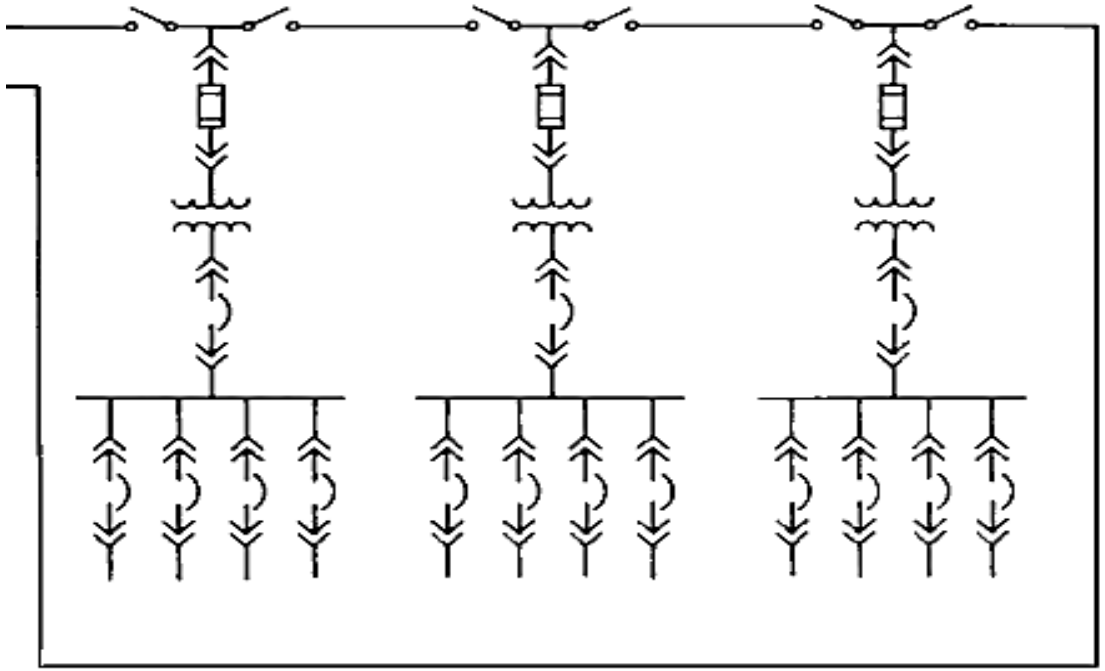

Ring (loop)

- Favoured by power distribution utilities due to reliability benefits
- Easy to extend the ring for inclusion of additional loads
- Supply can be restored to all consumers without waiting for repair of faulty section
- Automation possibilities for restoration

Switchgear

Assembly which houses the equipment used for isolation, switching or control of electrical load circuits in a load centre.

- Includes a circuit breaker or fuses with switches housed in a metallic enclosure connecting source and loads.
- **Control:** Local and remote.
- Outdoor or indoor.

Circuit Breakers

Circuit breakers are the **main devices used in switchgear** for:

- Fault clearing (Interrupting short circuit currents)
- Circuit control (flow of power)
- Isolation (safety) **if there is a visible air gap**

- Circuit breakers have moving contacts in a media to quench the arc while opening the main circuits in service or under fault.
- Types include:
  - Oil circuit breakers (now almost obsolete)
  - Vacuum circuit breakers (mostly for MV applications)
  - SF6 circuit breakers (for MV and HV/EHV applications)
  - Air circuit breakers (for LV applications)
  - Moulded case and miniature circuit breakers (for LV applications)

Outdoor Open Type

Advantages:

- Easier to locate and repair faults
- Lower capital cost

Drawbacks:

- Exposed to weather
- More prone to problems of water and dust
- Exposure to lightning strike
- Higher/more frequent need for maintenance
- Unauthorised access and danger of electrocution

Outdoor Metal Enclosed Type

Advantages:

- Well protected against weather action and dust
- Better safety against accidental contact
- Not exposed to direct lightning hit
- Easier access for maintenance

Drawbacks:

- Higher capital cost
- Will require additional protection against access (fencing)
- Higher degree of protection against dust and water ingress
- Maintenance may involve partial/total dismantling

Indoor Metal Enclosed Type

Advantages:

- Well protected against weather action and dust
- Better safety against accidental contact
- Not exposed to direct lightning hit
- Less frequent maintenance
- Easier access for maintenance

Drawbacks:

- Higher capital cost
- Maintenance may involve partial / total dismantling

Metal Clad MV Switchgear/ Ring Main Unit

Insulation

Normally, insulation between live components and live parts to earth is by **air**.

Designs with other forms of insulation such as SF_6 gas are available:

- Compact (lower clearances due to better dielectric strength of SF_6)
- Switchgear sealed hermetically and not affected by external environment
- Reliable performance with low possibility of faults due to vermin

MV Switchgear Components

- Outer enclosure and internal barriers
- Power circuit:
  - Bus bars
  - Switching element (circuit breaker or switch)
  - Cable chamber
  - Current and Voltage transformers
- Auxiliary devices, power supply and wiring
- Earthing arrangement
- Safety interlocks

Auxiliary Devices

- Auxiliary ac and dc power supply and wiring
- Control, metering and protection elements
- The actual voltage and current are stepped down to equivalent low values using current and voltage transformers with metering and protection elements connected on the secondary circuits.
- Utility elements - Panel lightning, anti-condensation heater and utility socket and panel ventilation where applicable

Auxiliary Power

- Power required for operation of switching device like circuit breaker
- Protection circuits require dc battery source for reliable supply
- Circuit breaker trip coils fed from dc supply

Control Elements

- Command switch / pushbuttons for operation of switchgear
- Other operation selectors (remote/local etc.)
- Protection relays
- Status indicating lamps
- Annunciation devices (visual, audio)

Measuring Elements

- All wiring from voltage and current transformer secondary.
- Standard values are 1 or 5 A and 110 V
- Indicating instruments
- Recorders
- Transducers
- Switches for selective measurement (of a given phase) etc.

Protection Elements

- Relays for sensing faults in individual circuits and to isolate only faulty sections
- Protection for other internal busbar faults
- Protection of line/feeder
- Protection of equipment fed by a feeder circuit like motor protection or transformer protection

Earthing Arrangement

- Earthing continuity for metal partitions in metal clad switchgear
- Earthing interconnection between panels or panel sections
- Earth terminals for connection of enclosure to panel earth
- Switchgear may have a built-in earth switch

Safety Interlocks and Features

- Devices/arrangements to ensure safe and coordinated operation
- Electrical and mechanical interlocks
- Operation inhibitors
- Padlocking provision to prevent accidental re-enegisation of circuits
- Safety flaps to prevent dangerous release of arch flash energy due to internal faults
- Internal Arc Containment (IAC) features in modern designs

LV Switchgear - Major Types

- Power control centres (PCC) for main power distribution to major loads
- Motor control centres (MCC) to distribute power to motors
- Power distribution boards (PDB) for other loads like utility equipment
- Lighting distribution boards (LDB)
- Sub-distribution boards

Safety Features

Safety for the operator and for the installation in case of arcing inside a switchgear can be obtained through three different design philosophies:

- Assemblies mechanically capable of withstanding the electric arc (passive protection)
- Assemblies equipped with devices limiting the effects of internal arcing (active protection)
- Assemblies equipped with current limiting circuit breakers.

End of Webinar 3

Any questions or comments?